U.S. Department
of Transportation

**National Highway
Traffic Safety
Administration**

400 Seventh Street, S.W.
Washington, D.C. 20590

Dear Crash Data Researchers/Users:

Thank you for choosing crash data from the National Highway Traffic Safety Administration (NHTSA) for your research or other use. The information contained in this motor vehicle crash report is collected, maintained and distributed in accordance with Public Law 89-564. In accordance with this Public Law, NHTSA is required not to release any case information until completion of quality control procedures. These procedures include a review of the case material to extract all names, licenses and registration numbers, non-coded interview material, non-research related researcher comments in the margins, non-factual data, and the production number portion of the vehicle identification number (VIN).

If you requested NHTSA to query its database files in order to identify a specific crash, then that query was made using non-personal descriptors you provided for use in our search. This motor vehicle crash may have been identified from a data search and matches the general, non-personal descriptors you provided, but we cannot confirm that this is the specific crash report you requested.

If you have any questions with regard to the above procedures, please contact the Field Operations Branch, Crash Investigation Division, National Center for Statistics and Analysis at 202-366-4820. Again, please be advised that we cannot confirm that this is the case that you have specifically requested nor can we certify the information to be correct.

*** *** ***

Get it together!
SAFETY BELTS SAVE LIVES

AUTO SAFETY HOTLINE
(800) 424-9393
Wash. D.C. Area 366-0123

U.S. Department of Transportation
National Highway Traffic Safety Administration

CASE SUMMARY

NATIONAL ACCIDENT SAMPLING SYSTEM
CRASHWORTHINESS DATA SYSTEM

PSU 12 CASE NO. 082A TYPE OF ACCIDENT Two vehicle oblique/two vehicle side/side

A. DESCRIPTION OF THE ACCIDENT SEQUENCE AND ACCIDENT PECULIARITIES

(Provide a summary of the accident sequence as well as any particular event of the accident that is noteworthy. Injury mechanism and vehicle crashworthiness is the focus, not driver culpability. **Do not include any personal identifiers.** Use reverse side if needed.)

Vehicle 1 was northwest on a twolane one way roadway and entered the intersection and struck vehicle 2 which was westbound on a 4 lane two way roadway. Both vehicles went off road and vehicle 1 struck gas pumps and a parked vehicle. Vehicle 2 struck a building, and all vehicles at final rest were off road. All vehicles were towed. Two occupants of vehicle 2 completely ejected. All occupants were transported. Driver of vehicle 2 was fatally injured.

B. VEHICLE PROFILE(S)

Vehicle No.	Class of Vehicle	Year/Make/Model	Most Severe Damage		Component Failure
			Damage Plane	Severity Description	
1	Pickup	1975 Dodge/D100	Front	Major	None
2	Intermediate	1985 Oldsmobile Cutlass	Left	Major	None

C. PERSON PROFILE(S)

Vehicle No.	Person Role	Seat Position	Restraint Use	Most Severe Injury			
				Body Region	Lesion	AIS	Injury Source
1	Driver	left front	lap	shoulder	fracture	2	door
2	Driver	left front	lapshoulder	unknown			
2	passenger	right front	none	face	fracture	1	unknown
2	passenger	middle back	none	chest	fracture	3	unknown

DO NOT SANITIZE THIS FORM

HS Form 434A
1/88

U.S. Department of Transportation
National Highway Traffic Safety Administration

NATIONAL ACCIDENT SAMPLING SYSTEM
CRASHWORTHINESS DATA SYSTEM

BEST AVAILABLE

ACCIDENT COLLISION DIAGRAM

PSU No. 1 2
Case Number–Stratum 0 8 2 A

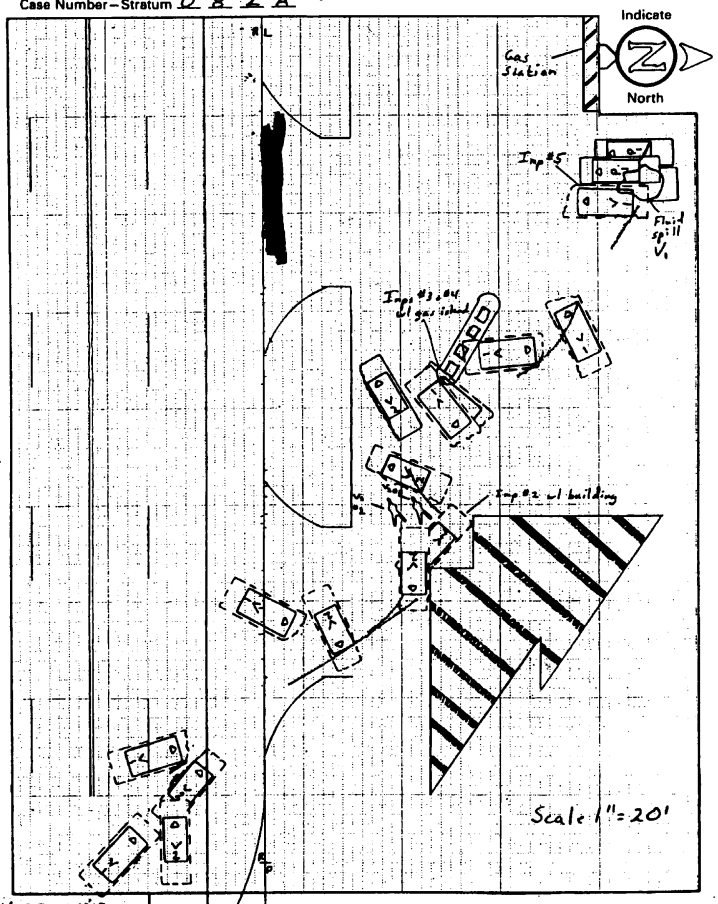

HS Form 431B
1/88

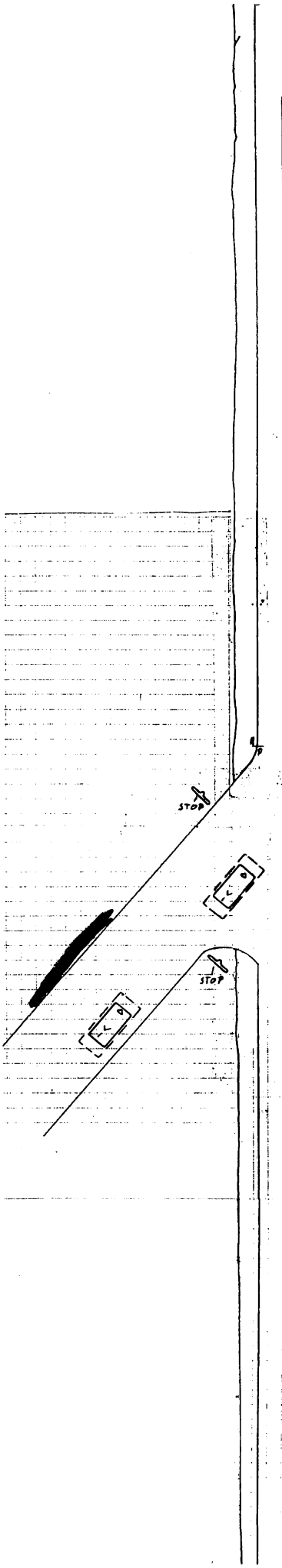

U.S. Department of Transportation
National Highway Traffic Safety Administration

ACCIDENT COLLISION MEASUREMENT TABLE

NATIONAL ACCIDENT SAMPLING SYSTEM
CRASHWORTHINESS DATA SYSTEM

Primary Sampling Unit Number 1 2 Case Number – Stratum 0 8 2 4

ACCIDENT COLLISION DIAGRAM

LEVEL I
PHYSICAL EVIDENCE ABSENT

To be accomplished when there is no physical evidence present at the scene:

*approximate vehicle orientation at impact and final rest

*applicable road/roadway delineation (e.g., curbs/edge lines, lane markings, median markings, pavement markings, etc.)

*applicable traffic controls (e.g., speed limit)

*north arrow placed on diagram

*sketch required

LEVEL II
PHYSICAL EVIDENCE PRESENT

In addition to the Level I tasks noted above, the following must be accomplished when physical evidence is present:

*document reference point and reference line relative to physical features present at the scene

*scaled documentation of all accident induced physical evidence

*scaled documentation of all roadside objects contacted

*roadway surface type and condition of applicable roadways

*grade measurements for all applicable roadways

*scaled representations of the vehicle(s) at pre-impact, impact, and final rest based upon either:

a) physical evidence, or

b) reconstructed accident dynamics

CRASH DATA

	VEH. #1	VEH. #2	VEH. #3
Heading Angle	310°	270°	
Surface Type	Bit	Bit	
Surface Condition	Dry	Dry	
Grade Measurement (v/h)	+.1"/28"	-.2"/28"	

Reference Point [redacted] Reference Line [redacted]

Item	Distance and Direction from Reference Point	Distance and Direction from Reference Line
RP	0.0' W	N/A
BLF gouge V2	16.3'	19.5' S
ELF gouge V2	18.1'	17.8' S
BRF gouge V1	18.1'	19.5' S
ERF gouge V1	20.9'	16.3' S
E mouth	22.6'	0.0' N
BLF V2	36.4'	5.1' N
E drive	38.1'	11.8' N
MLF V2	41.9'	14.1' N
BRF V2	47.1'	21.4' N
MLF V2	49.4'	24.4' N
RF V2	52.6' W	27.4' N

HS Form 431A
1/88

Item	Distance and Direction from Reference Point	Distance and Direction from Reference Line
ELF V2	54.0' W	31.5' N
ERF V2	55.0'	28.3'
B Imp #2 V2	56.3'	34.0'
E Imp #2 V2 building	60.2'	34.0'
W drive	69.2'	11.8'
Imp #2 V2	70.0'	42.9'
W edge building	71.5'	42.9'
BLR V2	72.0'	36.6'
MLR V2	75.4'	32.8'
MLR V2	77.7'	31.1'
W mouth	78.6'	0.0'
ELR V2	81.0'	29.9'
Imp #2 V1 w Island	98.9'	36.7'
BRF V1	100.5'	52.0'
MRF V1	104.8'	58.2'
E mouth	105.3'	0.0'
MRF V1	109.8'	61.6'
ERF V1	115.6'	64.5'
E island	117.4'	47.2'
E drive	118.8'	11.8'
BLR V1	126.3'	71.4'
MLR V1	131.1'	74.0'
ELR V1	135.0'	77.1'
B spill	136.0'	72.9-82.0
E spill	143.6'	72.9-82.0
BRR V3	144.8'	77.7'
ERR V3	148.1'	79.7
W Drive	149.3	11.8'
E edge gas station	154.9	66.0'
W mouth	160.5 W	0.0' N

U.S. Department of Transportation
National Highway Traffic Safety Administration

EXTERIOR VEHICLE FORM

NATIONAL ACCIDENT SAMPLING SYSTEM / CRASHWORTHINESS DATA SYSTEM

1. Primary Sampling Unit Number 1 2	3. Vehicle Number 0 1
2. Case Number–Stratum 0 8 2 A	

VEHICLE IDENTIFICATION

VIN D 1 7 B D 5 S [redacted] Model Year 1975

Vehicle Make (specify): Dodge Club Cab 100 Adventurer SE Vehicle Model (specify): D100

LOCATOR

Locate the end of the damage with respect to the vehicle longitudinal center line or bumper corner for end impacts or an undamaged axle for side impacts.

Specific Impact No.	Location of Direct Damage	Location of Field L
1	front bumper (r) front corner	(r) front corner
3	29.5" behind rear axle	beg. 35" behind rear axle
4	23.3" behind (r) rear axle	40" behind (r) rear axle

(1) cord set 168" from rear axle (2)(3) cord set 39.75" from center line of veh.

CRUSH PROFILE

NOTES: Identify the plane at which the C-measurements are taken (e.g., at bumper, above bumper, at sill, above sill, etc.) and label adjustments (e.g., free space).

Measure and document on the vehicle diagram the location of maximum crush.

Measure C1 to C6 from driver to passenger side in front or rear impacts and rear to front in side impacts.

Free space value is defined as the distance between the baseline and the original body contour taken at the individual C locations. This may include the following: bumper lead, bumper taper, side protrusion, side taper, etc. Record the value for each C-measurement and maximum crush.

Use as many lines/columns as necessary to describe each damage profile.

Specific Impact Number	Plane of C-Measurements	Direct Damage Width (CDC)	Direct Damage Max Crush	Field L	C_1	C_2	C_3	C_4	C_5	C_6	±D
1	bumper	74.5"	@C6 27.6"	58.75	11.3"	8.8"	4.8"	9.7"	9.2"	27.6"	0
3.	18" below beltline	83.3"	bet. C1-C2 11.1"	85.4	0	10.3"	6.4"	.6"	0	0	-58.75
4	17" below beltline	126.5"	bet. C1-C2 6.6"	147"	2"	5.3"	5.1"	0	.5"	0	-33.5

[redacted]

HS Form 435A
1/88

VEHICLE DAMAGE SKETCH

TIRE—WHEEL DAMAGE

a. Rotation physically restricted		b. Tire deflated	
RF	1	RF	1
LF	2	LF	2
RR	2	RR	2
LR	2	LR	1

(1) Yes (2) No (8) NA (9) Unk.

TYPE OF TRANSMISSION

☐ Manual ☑ Automatic

ORIGINAL SPECIFICATIONS

Wheelbase	133
Overall Length	213.75
Maximum Width	79.5
Curb Weight	3788
Average Track	65.5
Front Overhang	35
Rear Overhang	45.75
Engine Size: cyl./ displ.	V8 / 302 c.i.
Undeformed End Width	72.8

WHEEL STEER ANGLES
(For locked front wheels or displaced rear axles only)

RF ⊕ 4.5 °
LF ± — °
RR ± — °
LR ± — °
Within ±5 degrees

DRIVE WHEELS

☐ FWD ☑ RWD ☐ 4WD

Approximate Cargo Weight 175

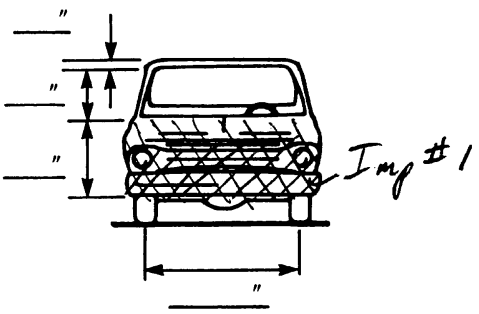

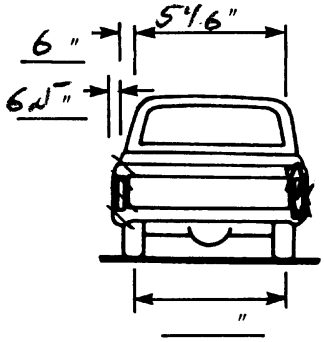

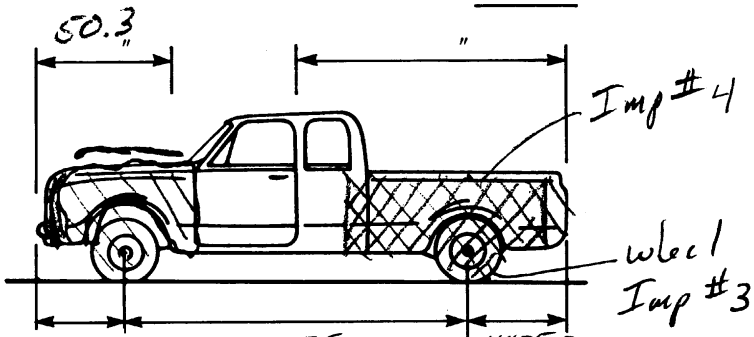

Bumper corner 21" 132.75" 44.75" Bumper corner
Stringline 35.25" 45.75" Stringline

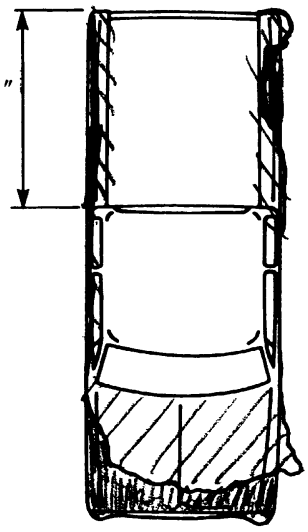

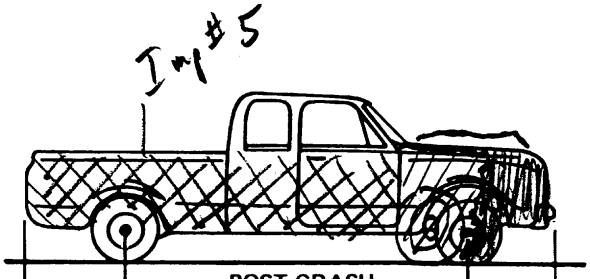

Bumper corner 44.75" 121.3" 18.7" Bumper corner
Stringline 45.75" 47" Stringline

NOTES: Sketch new perimeter and cross hatch direct damage and single hatch induced damage on all views. Annotate observations which might be useful in reconstructing the accident (e.g., grass in tire bead, direction of striations, scuff on sidewall, etc.). If pulling trailer, sketch type of trailer and damage received on the back of this page.
Annotate any damage caused by extrication such as component removal by torching, prying, or hydraulic shears.

CDC WORKSHEET

CODES FOR OBJECT CONTACTED

01-30—Vehicle Number

Noncollision
- (31) Overturn—rollover
- (32) Fire or explosion
- (33) Jackknife
- (34) Other intraunit damage (specify): _____
- (35) Noncollision injury
- (38) Other noncollision (specify): _____
- (39) Noncollision—details unknown

Collision with Fixed Object
- (41) Tree (≤4 inches in diameter)
- (42) Tree (>4 inches in diameter)
- (43) Shrubbery or bush
- (44) Embankment
- (45) Breakaway pole or post (any diameter)

Nonbreakaway Pole or Post
- (50) Pole or post (≤4 inches in diameter)
- (51) Pole or post (>4 but ≤12 inches in diameter)
- (52) Pole or post (>12 inches in diameter)
- (53) Pole or post (diameter unknown)
- (54) Concrete traffic barrier
- (55) Impact attenuator
- (56) Other traffic barrier (specify): _____
- (57) Fence
- (58) Wall
- (59) Building
- (60) Ditch or Culvert
- (61) Ground
- (62) Fire hydrant
- (63) Curb
- (64) Bridge
- (68) Other fixed object (specify): gas pump
- (69) Unknown fixed object

Collision With Nonfixed Object
- (71) Motor vehicle not in transport
- (72) Pedestrian
- (73) Cyclist or cycle
- (74) Other nonmotorist or conveyance (specify): _____
- (75) Vehicle occupant
- (76) Animal
- (77) Train
- (78) Trailer, disconnected in transport
- (88) Other nonfixed object (specify): _____
- (89) Unknown nonfixed object
- (98) Other event (specify): _____
- (99) Unknown event or object

DEFORMATION CLASSIFICATION BY EVENT NUMBER

Accident Event Sequence Number	Object Contacted	(1) (2) Direction of Force (degrees)	Incremental Value of Shift	(3) Deformation Location	(4) Specific Longitudinal or Lateral Location	(5) Specific Vertical or Lateral Location	(6) Type of Damage Distribution	(7) Deformation Extent
01	02	030	00	F	D	E	W	03
03	63	270	00	L	B	W	N	02
04	68	280	00	L	Z	E	W	03
05	71	090	00	R	D	E	W	02

US Department of Transportation
National Highway Traffic Safety Administration

INTERIOR VEHICLE FORM

NATIONAL ACCIDENT SAMPLING SYSTEM
CRASHWORTHINESS DATA SYSTEM

1. Primary Sampling Unit Number 1 2
2. Case Number–Stratum 0 8 2 A
3. Vehicle Number 0 1

INTEGRITY

4. Passenger Compartment Integrity 0 0

(00) No integrity loss

Yes, Integrity Was Lost Through
(01) Windshield
(02) Door (side)
(03) Door/hatch (rear)
(04) Roof
(05) Roof glass
(06) Side window
(07) Rear window
(08) Roof and roof glass
(09) Windshield and door (side)
(10) Windshield and roof
(11) Side and rear window
(98) Other combination of above (specify): _____

(99) Unknown

Door, Tailgate Or Hatch Opening

5. LF 1 6. RF 1 7. LR 0 8. RR 0 9. TG/H 0

(0) No door/gate/hatch
(1) Door/gate/hatch remained closed and operational
(2) Door/gate/hatch came open during collision
(3) Door/gate/hatch jammed shut
(8) Other (specify): _____

(9) Unknown

Damage/Failure Associated with Door, Tailgate or Hatch Opening in Collision. If IV05-IV09 ≠ 2, Then Code 0.

10. LF 0 11. RF 0 12. LR 0 13. RR 0 14. TG/H 0

(0) No door/gate/hatch or door not opened

Door, Tailgate, or Hatch Came Open During Collision
(1) Door operational (no damage)
(2) Latch/striker failure due to damage
(3) Hinge failure due to damage
(4) Door structure failure due to damage
(5) Door support (i.e., pillar, sill, roof side rail, etc.) failure due to damage
(6) Latch/striker and hinge failure due to damage
(8) Other failure (specify): _____

(9) Unknown

GLAZING

Glazing Damage from Impact Forces

15. WS 0 16. LF 0 17. RF 0 18. LR 0 19. RR 0
20. BL 0 21. Roof 8 22. Other 8

(0) No glazing damage from impact forces
(2) Glazing in place and cracked from impact forces
(3) Glazing in place and holed from impact forces
(4) Glazing out-of-place (cracked or not) and not holed from impact forces
(5) Glazing out-of-place and holed from impact forces
(6) Glazing disintegrated from impact forces
(7) Glazing removed prior to accident
(8) No glazing
(9) Unknown if damaged

Glazing Damage from Occupant Contact

23. WS 0 24. LF 0 25. RF 0 26. LR 0 27. RR 0
28. BL 0 29. Roof 0 30. Other 0

(0) No occupant contact to glazing or no glazing
(1) Glazing contacted by occupant but no glazing damage
(2) Glazing in place and cracked by occupant contact
(3) Glazing in place and holed by occupant contact
(4) Glazing out-of-place (cracked or not) by occupant contact and not holed by occupant contact
(5) Glazing out-of-place by occupant contact and holed by occupant contact
(6) Glazing disintegrated by occupant contact
(9) Unknown if contacted by occupant

If No Glazing Damage ***And*** No Occupant Contact or No Glazing, Then Code IV 31 Through IV 46 As 0

Type of Window/Windshield Glazing

31. WS 0 32. LF 0 33. RF 0 34. LR 0 35. RR 0
36. BL 0 37. Roof 0 38. Other 0

(0) No glazing contact and no damage, or no glazing
(1) AS-1 – Laminated
(2) AS-2 – Tempered
(3) AS-3 – Tempered-tinted
(4) AS-14 – Glass/Plastic
(8) Other (specify): _____

(9) Unknown

Window Precrash Glazing Status

39. WS 0 40. LF 0 41. RF 0 42. LR 0 43. RR 0
44. BL 0 45. Roof 0 46. Other 0

(0) No glazing contact and no damage, or no glazing
(1) Fixed
(2) Closed
(3) Partially opened
(4) Fully opened
(9) Unknown

INTRUSION WORK SHEET

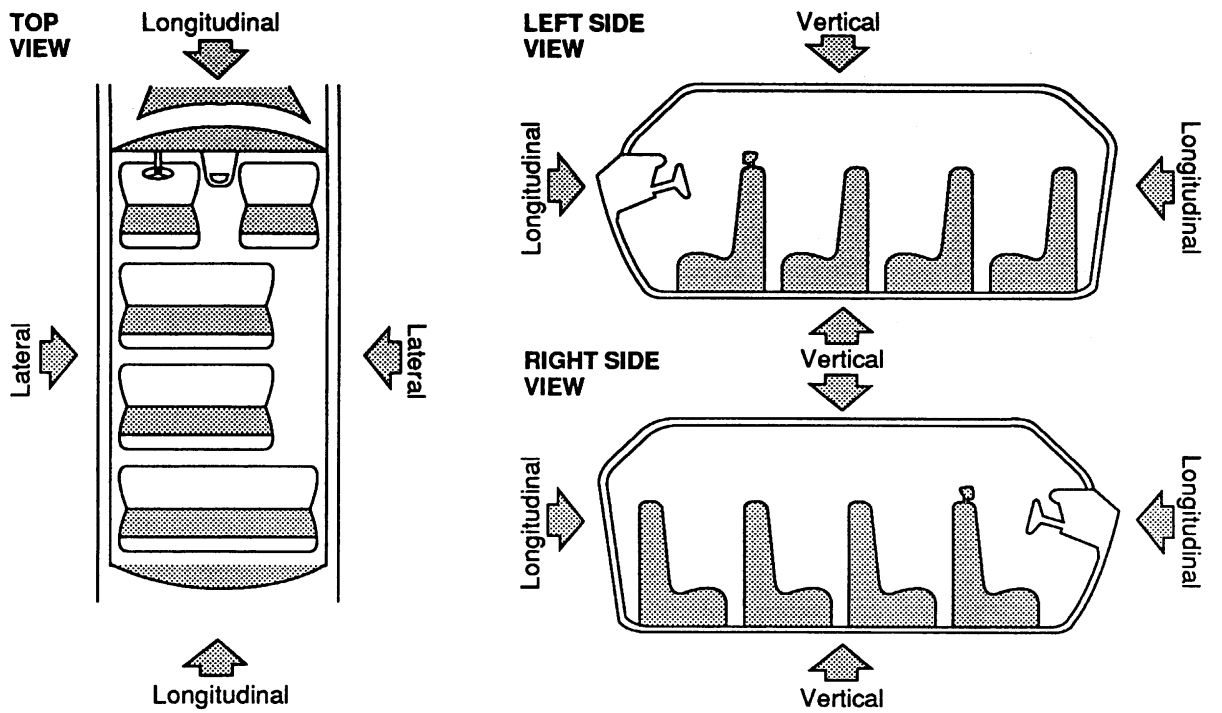

INTRUDED COMPONENT	LOCATION OF INTRUSION	DOMINANT CRUSH DIRECTION	COMPARISON VALUE	–	INTRUDED VALUE	=	INTRUSION
(r) toe pan	13	long.	28.5	–	20.5	=	8"
SW	13	long	meas	gap		=	1"
				–		=	
				–		=	
				–		=	
				–		=	
				–		=	
				–		=	
				–		=	
				–		=	
				–		=	
				–		=	
				–		=	
				–		=	
				–		=	

OCCUPANT AREA INTRUSION

Note: If no intrusions, leave variables IV 47-IV 86 blank.

	Location of Intrusion	Intruding Component	Magnitude of Intrusion	Dominant Crush Direction
1st	47. 13	48. 05	49. 3	50. 2
2nd	51. 13	52. 01	53. 1	54. 2
3rd	55.	56.	57.	58.
4th	59.	60.	61.	62.
5th	63.	64.	65.	66.
6th	67.	68.	69.	70.
7th	71.	72.	73.	74.
8th	75.	76.	77.	78.
9th	79.	80.	81.	82.
10th	83.	84.	85.	86.

LOCATION OF INTRUSION

Front Seat
- (11) Left
- (12) Middle
- (13) Right

Second Seat
- (21) Left
- (22) Middle
- (23) Right

Third Seat
- (31) Left
- (32) Middle
- (33) Right

Fourth Seat
- (41) Left
- (42) Middle
- (43) Right

(98) Other enclosed area (specify): _____

(99) Unknown

INTRUDING COMPONENT

Interior Components
- (01) Steering assembly
- (02) Instrument panel left
- (03) Instrument panel center
- (04) Instrument panel right
- (05) Toe pan
- (06) A-pillar
- (07) B-pillar
- (08) C-pillar
- (09) D-pillar
- (10) Door panel
- (11) Side panel/kickpanel
- (12) Roof (or convertible top)
- (13) Roof side rail
- (14) Windshield
- (15) Windshield header
- (16) Window frame
- (17) Floor pan
- (18) Backlight header
- (19) Front seat back
- (20) Second seat back
- (21) Third seat back
- (22) Fourth seat back
- (23) Fifth seat back
- (24) Seat cushion
- (25) Back panel or door surface
- (26) Other interior component (specify): _____

Exterior Components
- (30) Hood
- (31) Outside surface of vehicle (specify): _____
- (32) Other exterior object in the environment (specify): _____
- (33) Unknown exterior object
- (98) Intrusion of unlisted component(s) (specify): _____
- (99) Unknown

MAGNITUDE OF INTRUSION
- (1) ≥ 1 inch but < 3 inches
- (2) ≥ 3 inches but < 6 inches
- (3) ≥ 6 inches but < 12 inches
- (4) ≥ 12 inches but < 18 inches
- (5) ≥ 18 inches but < 24 inches
- (6) ≥ 24 inches
- (9) Unknown

DOMINANT CRUSH DIRECTION
- (1) Vertical
- (2) Longitudinal
- (3) Lateral
- (9) Unknown

STEERING COLUMN WORKING DIAGRAMS

STEERING COLUMN COLLAPSE

Steering Column Shear Module Movement

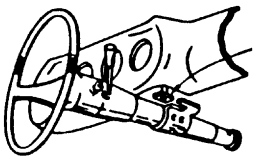

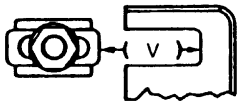

none

Left ___

Right ___ V = _____"

Direction and Magnitude of Steering Column Movement

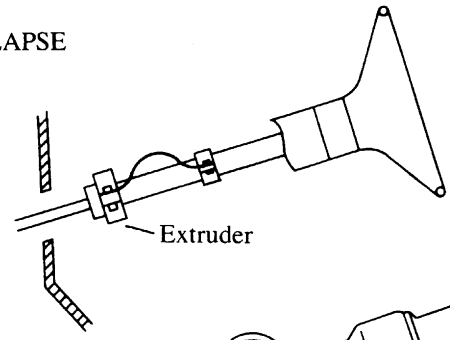

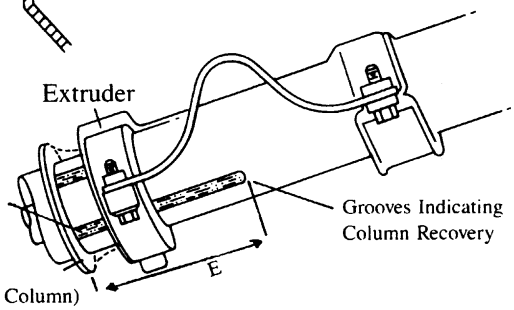

Extruder Retainer (Mini Column) or Flared Tube (Mod Column)

E=____

STEERING COLUMN MOVEMENT

Vertical Movement

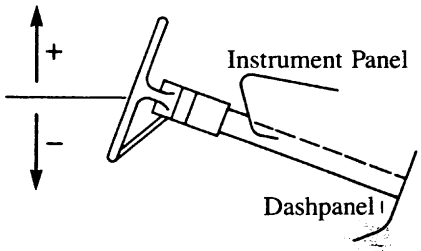

Lateral Movement

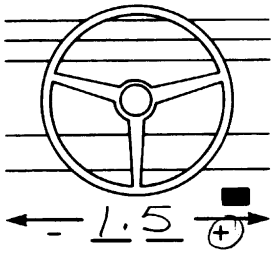

Longitudinal Movement

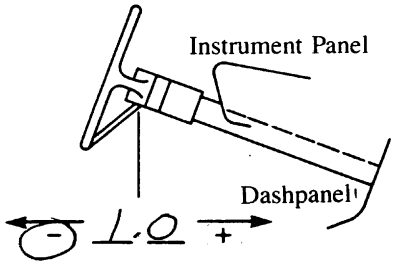

	COMPARISON VALUE	–	DAMAGED VALUE	=	MOVEMENT
VERTICAL	23	–	23	=	0
LATERAL	18.5	–	20	=	1.5
LONGITUDINAL	meas	–	1" gap	=	1"

STEERING RIM/SPOKE DEFORMATION

COMPARISON VALUE	–	DAMAGED VALUE	=	DEFORMATION
	–	meas 2" from	=	clipboard
	–	held at	=	wheel location

STEERING COLUMN

87. Steering Column Type 1

(1) Fixed column
(2) Tilt column
(3) Telescoping column
(4) Tilt and telescoping column
(8) Other column type (specify):

_____

(9) Unknown

88. Steering Column Collapse Due to Occupant Loading 9 8

_____ **Code actual measured movement to the nearest inch. See coding manual for measurement technique(s).**

(00) No movement, compression, or collapse
(01-49) Actual measured value
(50) 50 inches or greater

Estimated movement from observation
(81) Less than 1 inch
(82) ≥ 1 inch but < 2 inches
(83) ≥ 2 inches but < 4 inches
(84) ≥ 4 inches but < 6 inches
(85) ≥ 6 inches but < 8 inches
(86) Greater than or equal to 8 inches

(97) Apparent movement, value undetermined or cannot be measured or estimated
(98) Nonspecified type column
(99) Unknown

Direction And Magnitude of Steering Column Movement

89. Vertical Movement ± 0 0

90. Lateral Movement ± 0 2

91. Longitudinal Movement + 0 0 1

Code the actual measured movement to the nearest inch. See Coding Manual for measurement technique(s)
(+00) No Steering column movement
(+01 – +49) Actual measured value
(±50) 50 inches or greater

Estimated movement from observation
(±81) ≥ 1 inch but < 3 inches
(±82) ≥ 3 inches but < 6 inches
(±83) ≥ 6 inches but < 12 inches
(±84) ≥ 12 inches

(__97) Apparent movement > 1 inch but cannot be measured or estimated
(__99) Unknown

92. Steering Rim/Spoke Deformation 2

2." **Code actual measured deformation to the nearest inch.**

(0) No steering rim deformation
(1-5) Actual measured value
(6) 6 inches or more
(8) Observed deformation cannot be measured
(9) Unknown

93. Location of Steering Rim/Spoke Deformation 0 9

(00) No steering rim deformation

Quarter Sections
(01) Section A
(02) Section B
(03) Section C
(04) Section D

Half Sections
(05) Upper half of rim/spoke
(06) Lower half of rim/spoke
(07) Left half of rim/spoke
(08) Right half of rim/spoke

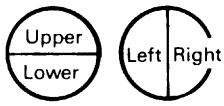

(09) Complete steering wheel collapse
(10) Undetermined location
(99) Unknown

INSTRUMENT PANEL

94. Odometer Reading 0 9 1 ,000

9/001.5 **miles—Code mileage to the nearest 1,000 miles**

(000) No odometer
(001) Less than 1,500 miles
(300) 299,500 miles or more
(999) Unknown

Source: [redacted]

95. Instrument Panel Damage from Occupant Contact 1

(0) No
(1) Yes
(9) Unknown

96. Knee Bolsters Deformed from Occupant Contact 8

(0) No
(1) Yes
(8) Not present
(9) Unknown

97. Did Glove Compartment Door Open During Collision(s) 0

(0) No
(1) Yes
(8) Not present
(9) Unknown

VEHICLE INTERIOR SKETCHES

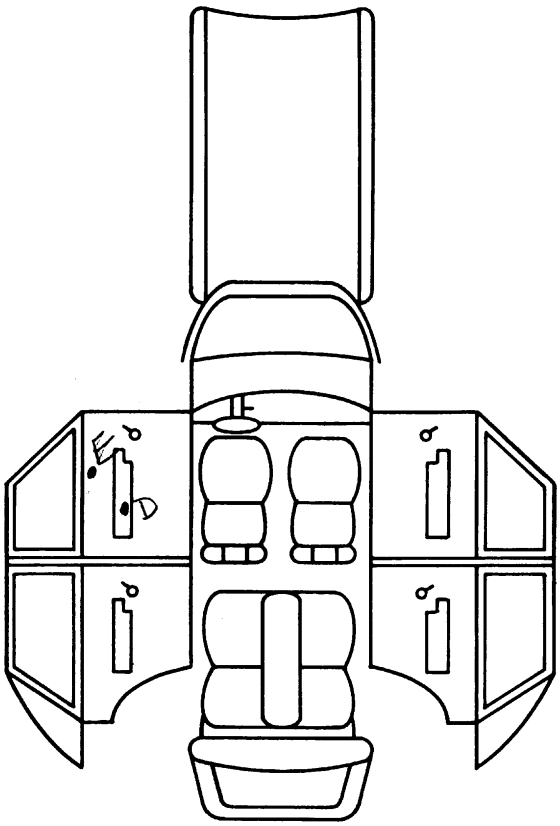

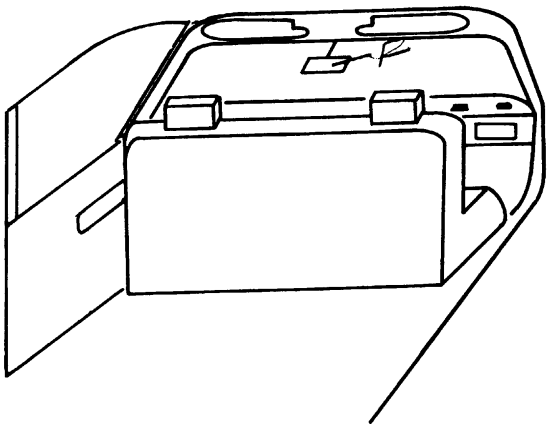

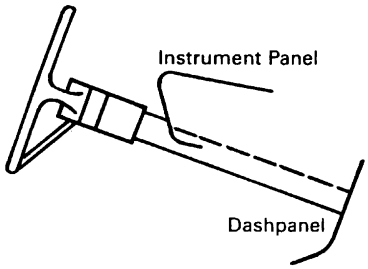

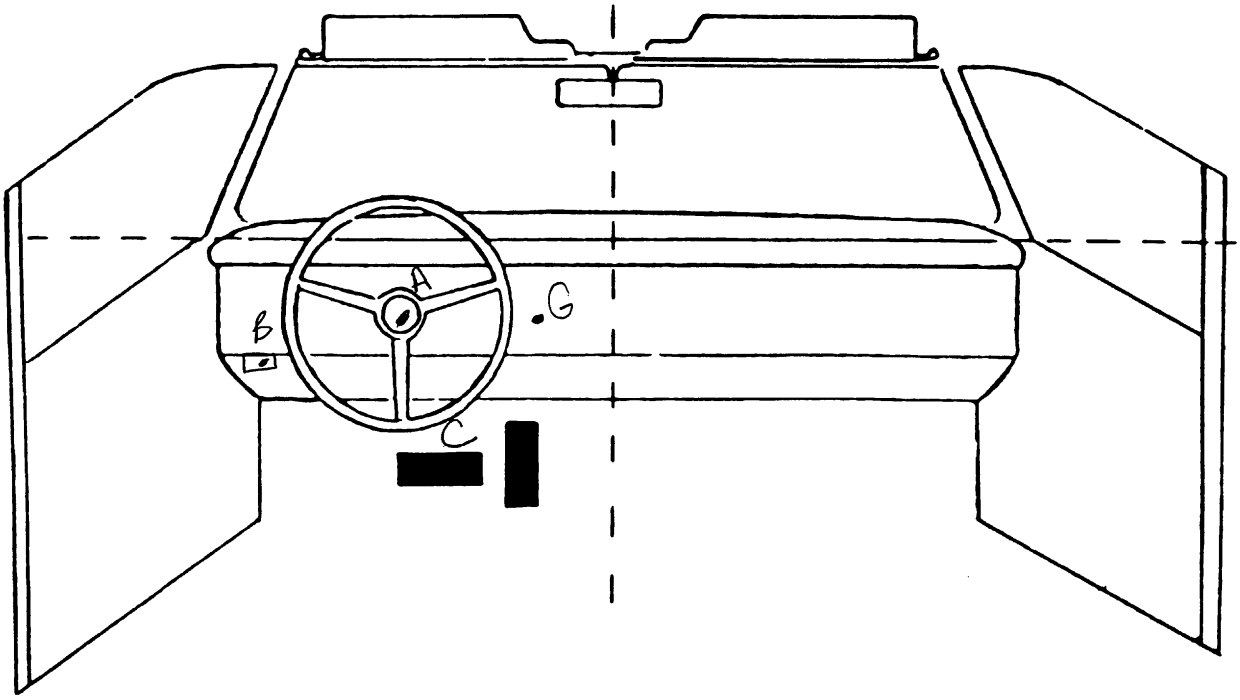

POINTS OF OCCUPANT CONTACT

Contact	Interior Component Contacted	Occupant No. If Known	Body Region If Known	Supporting Physical Evidence	Confidence Level of Contact Point
A	06	1	chest	deformed	1
B	09	1	(L) knee	knob bent	2
C	59	1	foot	brake pedal bent	1
D	21	1	(L) hip	dented	1
E	20	1	(L) chest	dented	1
F	02	1	head	tilted	1
G	10	1	unk	radio knob gone	3
H					
I					
J					
K					
L					
M					
N					

CODES FOR INTERIOR COMPONENTS

FRONT
- (01) Windshield
- (02) Mirror
- (03) Sunvisor
- (04) Steering wheel rim
- (05) Steering wheel hub/spoke
- (06) Steering wheel (combination of codes 04 and 05)
- (07) Steering column, transmission selector lever, other attachment
- (08) Add on equipment (e.g., CB, tape deck, air conditioner)
- (09) Left instrument panel and below
- (10) Center instrument panel and below
- (11) Right instrument panel and below
- (12) Glove compartment door
- (13) Knee bolster
- (14) Windshield including one or more of the following: front header, A-pillar, instrument panel, mirror,or steering assembly (driver side only)
- (15) Windshield including one or more of the following: front header, A-pillar, instrument panel, or mirror (passenger side only)
- (16) Other front object (specify): _____

LEFT SIDE
- (20) Left side interior surface, excluding hardware or armrests
- (21) Left side hardware or armrest
- (22) Left A pillar
- (23) Left B pillar
- (24) Other left pillar (specify): _____
- (25) Left side window glass or frame
- (26) Left side window glass including one or more of the following: frame, window sill, A-pillar, B-pillar, or roof side rail
- (27) Other left side object (specify): _____

RIGHT SIDE
- (30) Right side interior surface, excluding hardware or armrests
- (31) Right side hardware or armrest
- (32) Right A pillar
- (33) Right B pillar
- (34) Other right pillar (specify): _____
- (35) Right side window glass or frame
- (36) Right side window glass including one or more of the following: frame, window sill, A-pillar, B-pillar, or roof side rail
- (37) Other right side object (specify): _____

INTERIOR
- (40) Seat, back support
- (41) Belt restraint webbing/buckle
- (42) Belt restraint B-pillar attachment point
- (43) Other restraint system component (specify): _____
- (44) Head restraint system
- (45) Air cushion
- (46) Other occupants (specify): _____
- (47) Interior loose objects
- (48) Child safety seat (specify): _____
- (49) Other interior object (specify): _____

ROOF
- (50) Front header
- (51) Rear header
- (52) Roof left side rail
- (53) Roof right side rail
- (54) Roof or convertible top

FLOOR
- (56) Floor including toe pan
- (57) Floor or console mounted transmission lever, including console
- (58) Parking brake handle
- (59) Foot controls including parking brake

REAR
- (60) Backlight (rear window)
- (61) Backlight storage rack, door, etc.
- (62) Other rear object (specify): _____

CONFIDENCE LEVEL OF CONTACT POINT
- (1) Certain
- (2) Probable
- (3) Possible
- (4) Unknown

AUTOMATIC RESTRAINTS

NOTES: Encode the data for each applicable front seat position. The attributes for the variables may be found below. Restraint systems should be assessed during the vehicle inspection then coded on the Occupant Assessment Form.

		Left	Center	Right
FIRST	Availability	0	0	0
	Function	0	0	0
	Failure	0	0	0

Automatic (Passive) Restraint System Availability

(0) Not equipped/not available
(1) Airbag
(2) Airbag disconnected (specify): _____
(3) Airbag not reinstalled
(4) 2 point automatic belts
(5) 3 point automatic belts
(6) Automatic belts destroyed or rendered inoperative
(9) Unknown

Automatic (Passive) Restraint Function

(0) Not equipped/not available

Automatic Belt
(1) Automatic belt in use
(2) Automatic belt not in use
(3) Automatic belt use unknown

Air Bag
(4) Airbag deployed during accident
(5) Airbag deployed inadvertently just prior to accident
(6) Deployed, accident sequence undetermined
(7) Nondeployed
(8) Unknown if deployed
(9) Unknown

Did Automatic (Passive) Restraint Fail

(0) Not equipped/not available
(1) No
(2) Yes (specify): _____
(9) Unknown

MANUAL RESTRAINTS

NOTES: Encode the applicable data **for each seat position** in the vehicle. The attributes for the variables may be found below. Restraint systems should be assessed during the vehicle inspection then coded on the Occupant Assessment Form.

If a child safety seat is present, encode the data on the back of this page.

If the vehicle has automatic restraints available, encode the appropriate data on the back of the previous page.

		Left	Center	Right
FIRST	Availability	3		3
	Use	03		03
	Failure Modes	1		0
SECOND	Availability	3		3
	Use	03		03
	Failure Modes	0		0
THIRD	Availability			
	Use			
	Failure Modes			
OTHER	Availability			
	Use			
	Failure Modes			

Manual (Active) Belt System Availability

(0) Not available
(1) Belt removed/destroyed
(2) Shoulder belt
(3) Lap belt
(4) Lap and shoulder belt
(5) Belt available — type unknown
(8) Other belt (specify):

_____

(9) Unknown

Manual (Active) Belt System Use

(00) None used, not available, or belt removed/destroyed
(01) Inoperative (specify):

_____

(02) Shoulder belt
(03) Lap belt
(04) Lap and shoulder belt
(05) Belt used — type unknown

_____

(08) Other belt used (specify):

_____

(12) Shoulder belt used with child safety seat
(13) Lap belt used with child safety seat
(14) Lap and shoulder belt used with child safety seat
(15) Belt used with child safety seat — type unknown
(18) Other belt used with child safety seat (specify):

_____

(99) Unknown if belt used

Manual (Active) Belt Failure Modes During Accident

(0) No manual belt used or not available
(1) No manual belt failure(s)
(2) Manual belt failure(s) (encode all that apply above)
[A] Torn webbing (stretched webbing not included)
[B] Broken buckle or latchplate
[C] Upper anchorage separated
[D] Other achorage separated (specify):

_____

[E] Broken retractor
[F] Other manual belt failure (specify):

_____

(9) Unknown

CHILD SAFETY SEAT FIELD ASSESSMENT

When a child safety seat is present enter the occupant's number in the first row and complete the column below the occupant's number using the codes listed below. Complete a column for each child safety seat present.

Occupant Number						
1. Type of Child Safety Seat						
2. Child Safety Seat Orientation						
3. Child Safety Seat Harness Usage						
4. Child Safety Seat Shield Usage						
5. Child Safety Seat Tether Usage						
6. Child Safety Seat Make/Model	Specify Below for Each Child Safety Seat					

1. Type of Child Safety Seat

(0) No child safety seat
(1) Infant seat
(2) Toddler seat
(3) Convertible seat
(4) Booster seat
(7) Other type child safety seat (specify):

_____

(8) Unknown child safety seat type
(9) Unknown if child safety seat used

2. Child Safety Seat Orientation

(00) No child safety seat

Designed for Rear Facing for This Age/Weight
(01) Rear facing
(02) Forward facing
(03) Other orientation (specify):

_____

(04) Unknown orientation

Designed for Forward Facing for This Age/Weight
(11) Rear facing
(12) Forward facing
(18) Other orientation (specify):

_____

(19) Unknown orientation

Unknown Design or Orientation for This Age/Weight, or Unknown Age/Weight
(21) Rear facing
(22) Forward facing
(28) Other orientation (specify):

_____

(29) Unknown orientation

(99) Unknown if child safety seat used

3. Child Safety Seat Harness Usage

4. Child Safety Seat Shield Usage

5. Child Safety Seat Tether Usage

Note: Options Below Are Used for Variables 3-5.

(00) No child safety seat

Not Designed with Harness/Shield/Tether
(01) After market harness/shield/tether added, not used
(02) After market harness/shield/tether used
(03) Child safety seat used, but no after market harness/shield/tether added
(09) Unknown if harness/shield/tether added or used

Designed with Harness/Shield/Tether
(11) Harness/shield/tether not used
(12) Harness/shield/tether used
(19) Unknown if harness/shield/tether used

Unknown if Designed with Harness/Shield/Tether
(21) Harness/shield/tether not used
(22) Harness/shield/tether used
(29) Unknown if harness/shield/tether used

(99) Unknown if child safety seat used

6. Child Safety Seat Make/Model
(Specify make/model and occupant number)

_____

_____

_____

_____

HEAD RESTRAINTS/SEAT EVALUATION

NOTES: Encode the applicable data for **each seat position** in the vehicle. The attributes for these variables may be found at the bottom of the page. Head restraint type/damage and seat type/performance should be assessed during the vehicle inspection then coded on the Occupant Assessment Form.

		Left	Center	Right
FIRST	Head Restraint Type/Damage	0		0
	Seat Type	01		00
	Seat Performance	1		0
SECOND	Head Restraint Type/Damage	0		0
	Seat Type	00		00
	Seat Performance	0		0
THIRD	Head Restraint Type/Damage			
	Seat Type			
	Seat Performance			
OTHER	Head Restraint Type/Damage			
	Seat Type			
	Seat Performance			

Head Restraint Type/Damage by Occupant at This Occupant Position

(0) No head restraints
(1) Integral — no damage
(2) Integral — damaged during accident
(3) Adjustable — no damage
(4) Adjustable — damaged during accident
(5) Add-on — no damage
(6) Add-on — damaged during accident
(8) Other (specify): _____
(9) Unknown

Seat Type (This Occupant Position)

(00) Occupant not seated or no seat
(01) Bucket
(02) Bucket with folding back
(03) Bench
(04) Bench with separate back cushions
(05) Bench with folding back(s)
(06) Split bench with separate back cushions
(07) Split bench with folding back(s)
(08) Pedestal (i.e., van type)
(09) Other seat type (specify): _____
(99) Unknown

Seat Performance (This Occupant Position)

(0) Occupant not seated or no seat
(1) No seat performance failure(s)
(2) Seat performance failure(s) (Encode all that apply)
[A] Seat adjusters failed
[B] Seat back folding locks failed
[C] Seat tracks failed
[D] Seat anchors failed
[E] Deformed by impact of passenger from rear
[F] Deformed by impact of passenger from front
[G] Deformed by own inertial forces
[H] Deformed by passenger compartment intrusion (specify):
_____
_____
_____
[I] Other (specify): _____
_____
(9) Unknown

DESCRIBE ANY INDICATION OF ABNORMAL OCCUPANT POSTURE (I.E. UNUSUAL OCCUPANT CONTACT PATTERN)

EJECTION/ENTRAPMENT DATA

Complete the following if the researcher has any indications that an occupant was either ejected from or entrapped in the vehicle. Code the appropriate data on the Occupant Assessment Form.

EJECTION No [✓] Yes [ ]

Describe indications of ejection and body parts involved in partial ejection(s):

Occupant Number						
Ejection						
Ejection Area						
Ejection Medium						
Medium Status						

Ejection
(1) Complete ejection
(2) Partial ejection
(3) Ejection, unknown degree
(9) Unknown

Ejection Area
(1) Windshield
(2) Left front
(3) Right front
(4) Left rear
(5) Right rear
(6) Rear
(7) Roof
(8) Other area (e.g., back of pickup, etc.) (specify): _____
(9) Unknown

Ejection Medium
(1) Door/hatch/tailgate
(2) Nonfixed roof structure
(3) Fixed glazing
(4) Nonfixed glazing (specify): _____
(5) Integral structure
(8) Other medium (specify): _____
(9) Unknown

Medium Status (Immediately Prior to Impact)
(1) Open
(2) Closed
(3) Integral structure
(9) Unknown

ENTRAPMENT No [✓] Yes [ ]

Describe entrapment mechanism: _____

Component(s): _____

(Note in vehicle interior diagram)

U.S. Department of Transportation

National Highway Traffic Safety Administration

Form Approved
O.M.B. No. 2127-0021
NATIONAL ACCIDENT SAMPLING SYSTEM
CRASHWORTHINESS DATA SYSTEM

OCCUPANT INJURY FORM

1. Primary Sampling Unit Number 1 2
2. Case Number – Stratum 0 8 2 A
3. Vehicle Number 0 1
4. Occupant Number 0 1

INJURY DATA

Record below the actual injuries sustained by this occupant that were identified from the official and unofficial data sources. Remember not to double count an injury just because it was identified from two different sources. If greater than twenty injuries have been documented, encode the balance on the Occupant Injury Supplement.

	Source of Injury Data	O.I.C. – A.I.S. Body Region	Aspect	Lesion	System Organ	A.I.S. Severity	Injury Source	Injury Source Confidence Level	Direct/ Indirect Injury	Occupant Area Intrusion No.
1st	5. 7	6. S	7. L	8. F	9. S	10. 2	11. 2 0	12. 1	13. 1	14. 0 0
2nd	15. 7	16. F	17. C	18. L	19. I	20. 1	21. 0 4	22. 1	23. 1	24. 0 2
3rd	25. 7	26. F	27. C	28. L	29. I	30. 1	31. 0 4	32. 1	33. 1	34. 0 2
4th	35. 7	36. F	37. I	38. L	39. I	40. 1	41. 0 4	42. 1	43. 1	44. 0 2
5th	45.	46.	47.	48.	49.	50.	51.	52.	53.	54.
6th	55.	56.	57.	58.	59.	60.	61.	62.	63.	64.
7th	65.	66.	67.	68.	69.	70.	71.	72.	73.	74.
8th	75.	76.	77.	78.	79.	80.	81.	82.	83.	84.
9th	85.	86.	87.	88.	89.	90.	91.	92.	93.	94.
10th	95.	96.	97.	98.	99.	100.	101.	102.	103.	104.
11th	105.	106.	107.	108.	109.	110.	111.	112.	113.	114.
12th	115.	116.	117.	118.	119.	120.	121.	122.	123.	124.
13th	125.	126.	127.	128.	129.	130.	131.	132.	133.	134.
14th	135.	136.	137.	138.	139.	140.	141.	142.	143.	144.
15th	145.	146.	147.	148.	149.	150.	151.	152.	153.	154.
16th	155.	156.	157.	158.	159.	160.	161.	162.	163.	164.
17th	165.	166.	167.	168.	169.	170.	171.	172.	173.	174.
18th	175.	176.	177.	178.	179.	180.	181.	182.	183.	184.
19th	185.	186.	187.	188.	189.	190.	191.	192.	193.	194.
20th	195.	196.	197.	198.	199.	200.	201.	202.	203.	204.

HS Form 433B
1/88

This report is authorized by P.L. 89-563, Title 1, Section 106, 108, and 112. While you are not required to respond, your cooperation is needed to make the results of this data collection effort comprehensive, accurate, and timely.

OCCUPANT INJURY DATA SUPPLEMENT

	Source of Injury Data	O.I.C. – A.I.S. Body Region	Aspect	Lesion	System Organ	A.I.S. Severity	Injury Source	Injury Source Confidence Level	Direct/ Indirect Injury	Occupant Area Intrusion No.
21st	___	___	___	___	___	___	___ ___	___	___	___ ___
22nd	___	___	___	___	___	___	___ ___	___	___	___ ___
23rd	___	___	___	___	___	___	___ ___	___	___	___ ___
24th	___	___	___	___	___	___	___ ___	___	___	___ ___
25th	___	___	___	___	___	___	___ ___	___	___	___ ___
26th	___	___	___	___	___	___	___ ___	___	___	___ ___
27th	___	___	___	___	___	___	___ ___	___	___	___ ___
28th	___	___	___	___	___	___	___ ___	___	___	___ ___
29th	___	___	___	___	___	___	___ ___	___	___	___ ___
30th	___	___	___	___	___	___	___ ___	___	___	___ ___
31st	___	___	___	___	___	___	___ ___	___	___	___ ___
32nd	___	___	___	___	___	___	___ ___	___	___	___ ___
33rd	___	___	___	___	___	___	___ ___	___	___	___ ___
34th	___	___	___	___	___	___	___ ___	___	___	___ ___
35th	___	___	___	___	___	___	___ ___	___	___	___ ___
36th	___	___	___	___	___	___	___ ___	___	___	___ ___
37th	___	___	___	___	___	___	___ ___	___	___	___ ___
38th	___	___	___	___	___	___	___ ___	___	___	___ ___
39th	___	___	___	___	___	___	___ ___	___	___	___ ___
40th	___	___	___	___	___	___	___ ___	___	___	___ ___
41st	___	___	___	___	___	___	___ ___	___	___	___ ___
42nd	___	___	___	___	___	___	___ ___	___	___	___ ___
43rd	___	___	___	___	___	___	___ ___	___	___	___ ___
44th	___	___	___	___	___	___	___ ___	___	___	___ ___
45th	___	___	___	___	___	___	___ ___	___	___	___ ___

OFFICIAL INJURY DATA—SOFT TISSUE INJURIES

Indicate the *Location, Lesion, Detail* (size, depth, fracture type, head injury clinical signs and neurological deficits), and *Source* of all injuries indicated by official sources (or from PAR or other unofficial sources if medical records and interviewee data are unavailable.)

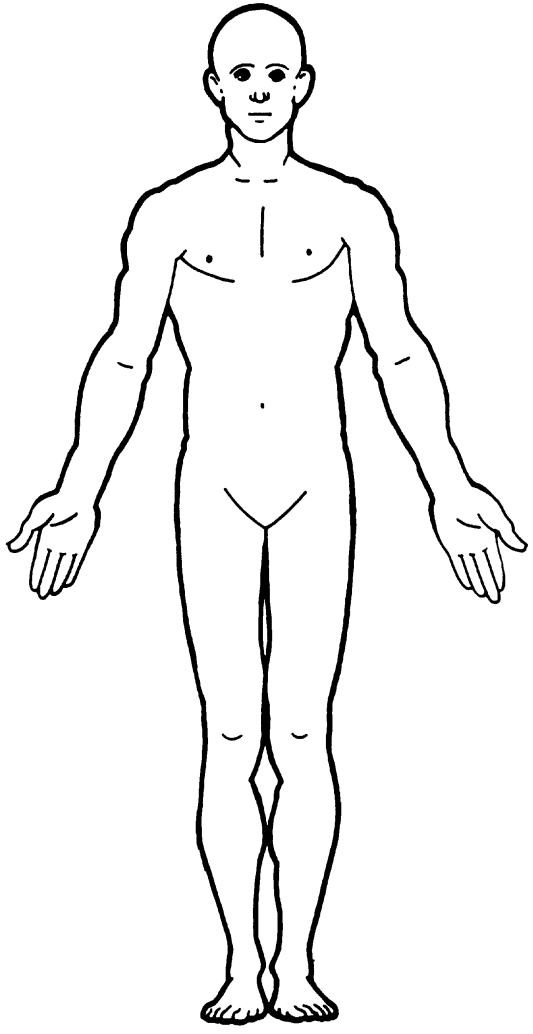

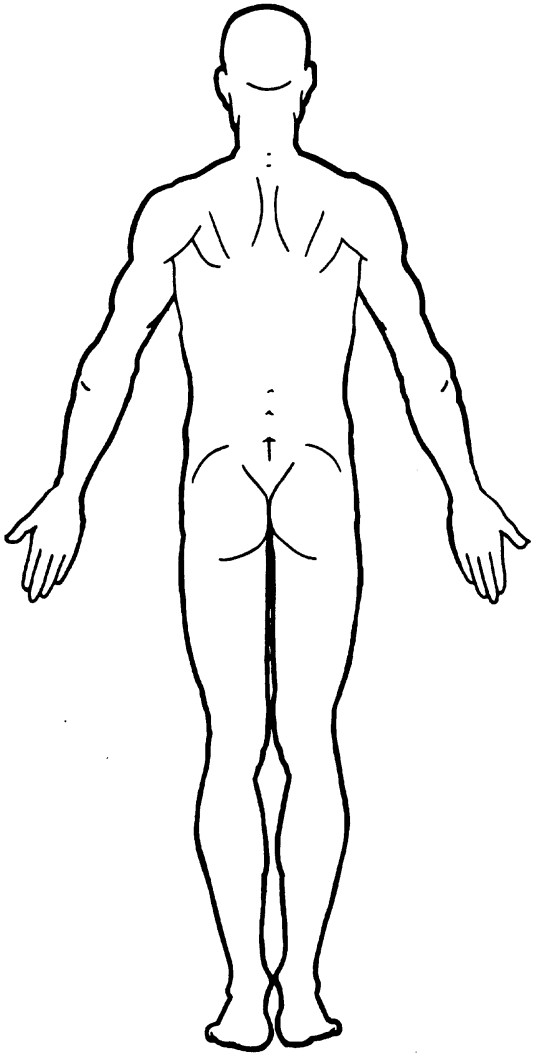

SOURCE OF INJURY DATA

OFFICIAL

(1) Autopsy records with or without hospital medical records
(2) Hospital medical records other than emergency room (eg. discharge summary)
(3) Emergency room records only (including associated X-rays or other lab reports)
(4) Private physician, walk-in or emergency clinic

UNOFFICIAL

(5) Lay coroner report
(6) E.M.S. personnel
(7) Interviewee
(8) Other source (specify): _____

(9) Police

INJURY SOURCE

FRONT

(01) Windshield
(02) Mirror
(03) Sunvisor
(04) Steering wheel rim
(05) Steering wheel hub/spoke
(06) Steering wheel (combination of codes 04 and 05)
(07) Steering column, transmission selector lever, other attachment
(08) Add-on equipment (e.g., CB, tape deck, air conditioner)
(09) Left instrument panel and below
(10) Center instrument panel and below
(11) Right instrument panel and below
(12) Glove compartment door
(13) Knee bolster
(14) Windshield including one or more of the following: front header, A-pillar, instrument panel, mirror, or steering assembly (driver side only)
(15) Windshield including one or more of the following: front header, A-pillar, instrument panel, or mirror (passenger side only)
(16) Other front object (specify): _____

LEFT SIDE

(20) Left side interior surface, excluding hardware or armrests
(21) Left side hardware or armrest
(22) Left A pillar
(23) Left B pillar
(24) Other left pillar (specify): _____

(25) Left side window glass or frame
(26) Left side window glass including one or more of the following: frame, window sill, A-pillar, B-pillar, or roof side rail
(27) Other left side object (specify): _____

RIGHT SIDE

(30) Right side interior surface, excluding hardware or armrests
(31) Right side hardware or armrest
(32) Right A pillar
(33) Right B pillar
(34) Other right pillar (specify): _____

(35) Right side window glass or frame
(36) Right side window glass including one or more of the following: frame, window sill, A-pillar, B-pillar, roof side rail
(37) Other right side object (specify): _____

INTERIOR

(40) Seat, back support
(41) Belt restraint webbing/buckle
(42) Belt restraint B-pillar attachment point
(43) Other restraint system component (specify): _____

(44) Head restraint system
(45) Air cushion
(46) Other occupants (specify): _____

(47) Interior loose objects
(48) Child safety seat (specify): _____

(49) Other interior object (specify): _____

ROOF

(50) Front header
(51) Rear header
(52) Roof left side rail
(53) Roof right side rail
(54) Roof or convertible top

FLOOR

(56) Floor including toe pan
(57) Floor or console mounted transmission lever, including console
(58) Parking brake handle
(59) Foot controls including parking brake

REAR

(60) Backlight (rear window)
(61) Backlight storage rack, door, etc.
(62) Other rear object (specify): _____

EXTERIOR OF OCCUPANT'S VEHICLE

(65) Hood
(66) Outside hardware (e.g., outside mirror, antenna)
(67) Other exterior surface or tires (specify): _____

(68) Unknown exterior objects

EXTERIOR OF OTHER MOTOR VEHICLE

(70) Front bumper
(71) Hood edge
(72) Other front of vehicle (specify): _____

(73) Hood
(74) Hood ornament
(75) Windshield, roof rail, A-pillar
(76) Side surface
(77) Side mirrors
(78) Other side protrusions (specify): _____

(79) Rear surface
(80) Undercarriage
(81) Tires and wheels
(82) Other exterior of other motor vehicle (specify): _____

(83) Unknown exterior of other motor vehicle

OTHER VEHICLE OR OBJECT IN THE ENVIRONMENT

(84) Ground
(85) Other vehicle or object (specify) _____

(86) Unknown vehicle or object

NONCONTACT INJURY

(90) Fire in vehicle
(91) Flying glass
(92) Other noncontact injury source (specify) _____

(97) Injured, unknown source

INJURY SOURCE CONFIDENCE LEVEL

(1) Certain
(2) Probable
(3) Possible
(9) Unknown

DIRECT/INDIRECT INJURY

(1) Direct contact injury
(2) Indirect contact injury
(3) Noncontact injury
(7) Injured, unknown source

OCCUPANT INJURY CLASSIFICATION

O.I.C. Body Region

(M) Abdomen
(Q) Ankle–foot
(A) Arm (upper)
(B) Back–thoracolumbar spine
(C) Chest
(E) Elbow
(F) Face
(R) Forearm
(H) Head–skull
(U) Injured, unknown region
(K) Knee
(L) Leg (lower)
(Y) Lower limb(s) (whole or unknown part)
(N) Neck–cervical spine
(P) Pelvic–hip
(S) Shoulder
(T) Thigh
(X) Upper limb(s) (whole or unknown part)
(O) Whole body
(W) Wrist–hand

Aspect of Injury

(A) Anterior–front
(C) Central
(I) Inferior–lower
(U) Injured, unknown aspect
(L) Left
(P) Posterior–back
(R) Right
(S) Superior–upper
(W) Whole region

Lesion

(A) Abrasion
(M) Amputation
(V) Avulsion
(B) Burn
(K) Concussion
(C) Contusion
(N) Crush
(G) Detachment, separation
(D) Dislocation
(F) Fracture
(Z) Fracture and dislocation
(U) Injured, unknown lesion
(L) Laceration
(O) Other
(P) Perforation, puncture
(R) Rupture
(S) Sprain
(T) Strain
(E) Total severance, transection

System/Organ

(W) All systems in region
(A) Arteries–veins
(B) Brain
(D) Digestive
(E) Ears
(O) Eye
(H) Heart
(U) Injured, unknown system
(I) Integumentary
(J) Joints
(K) Kidneys
(L) Liver
(M) Muscles
(N) Nervous system
(P) Pulmonary–lungs
(R) Respiratory
(S) Skeletal
(C) Spinal cord
(Q) Spleen
(T) Thyroid, other endocrine gland
(G) Urogenital
(V) Vertebrae

Abbreviated Injury Scale

(1) Minor injury
(2) Moderate injury
(3) Serious injury
(4) Severe injury
(5) Critical injury
(6) Maximum (untreatable)
(7) Injured, unknown severity

OFFICIAL INJURY DATA—SKELETAL INJURIES

Indicate the *Location, Lesion, Detail* (size, depth, fracture type, head injury clinical signs and neurological deficits), and *Source* of all injuries indicated by official sources (or from PAR or other unofficial sources if medical records and interviewee data are unavailable.)

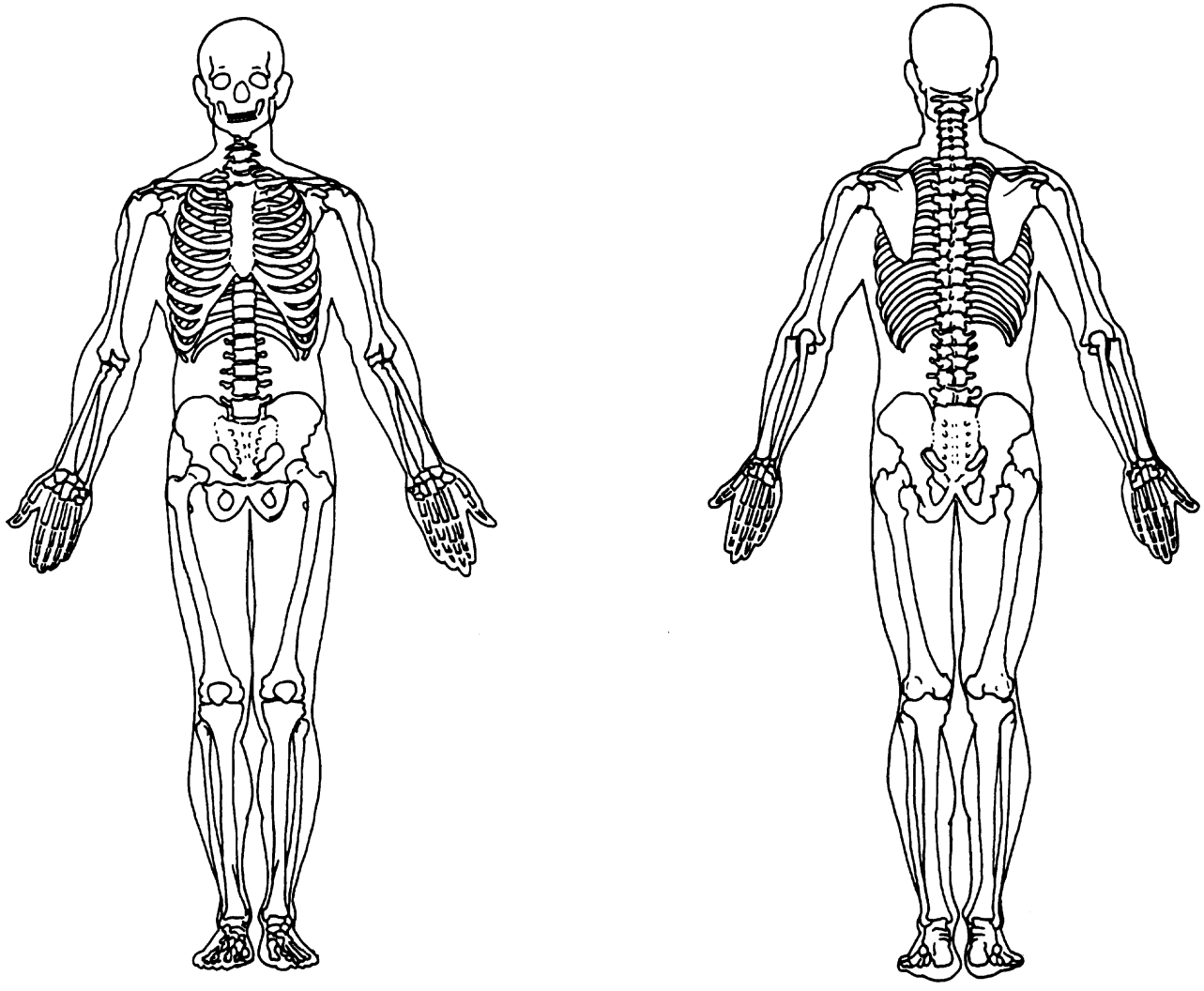

OFFICIAL INJURY DATA – INTERNAL INJURIES

Indicate the *Location, Lesion, Detail* (size, depth, fracture type, head injury clinical signs and neurological deficits), and *Source* of all injuries indicated by official sources (or from PAR or other unofficial sources if medical records and interviewee data are unavailable.)

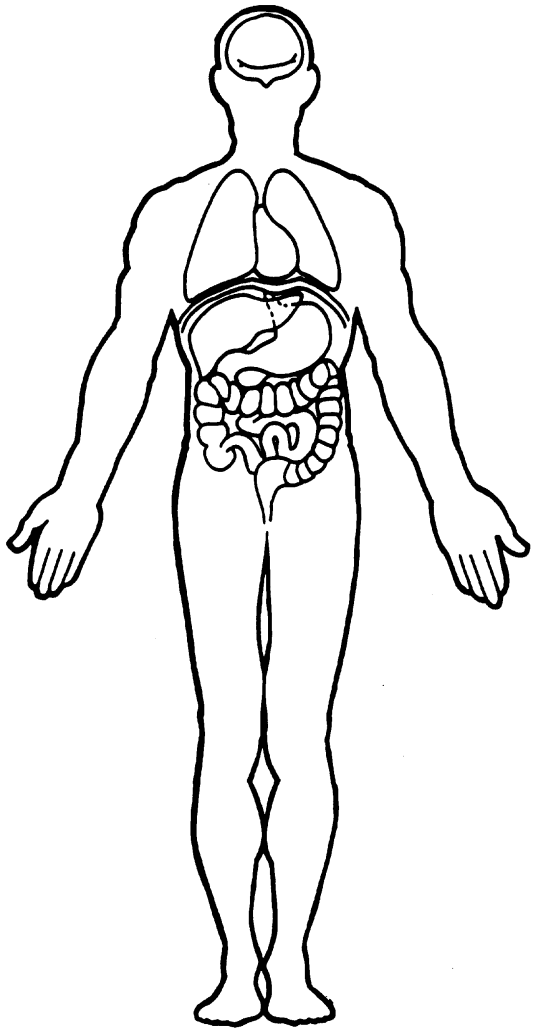

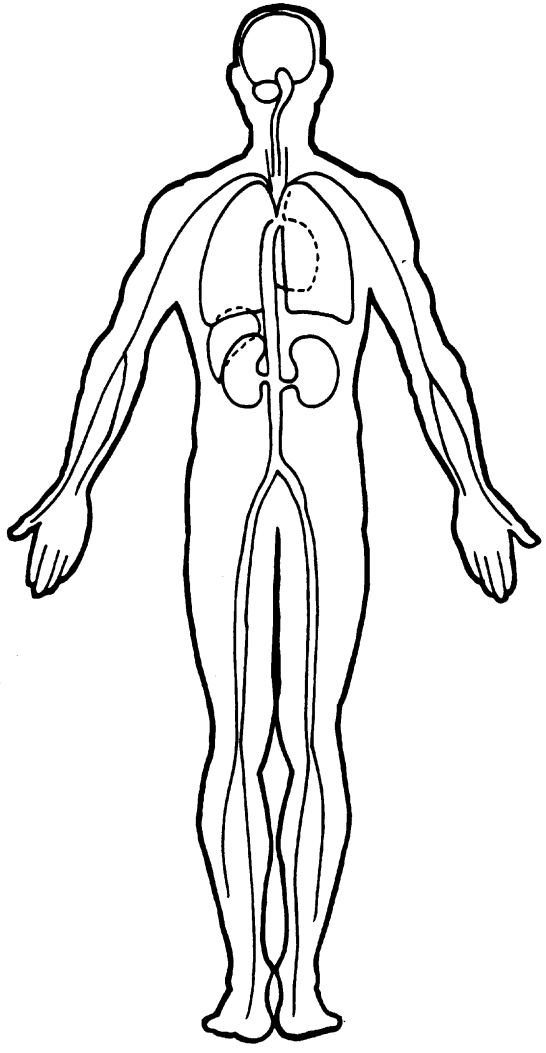

U.S. Department of Transportation
National Highway Traffic Safety Administration

UPDATE FORM

NATIONAL ACCIDENT SAMPLING SYSTEM
CRASHWORTHINESS DATA SYSTEM

1. Primary Sampling Unit Number 1 2
2. Case Number – Stratum 0 8 2 A
3. Vehicle Number 0 1
4. Occupant Number 0 1

RECEIVED [redacted] 1988

Driver or Occupant Name: _____

Address: _____

Other Information: _____

(Sanitize this section prior to Update submission.)

INJURY DATA CODED ON INITIAL SUBMISSION

	Source of Injury Data	O.I.C. – A.I.S. Body Region	Aspect	Lesion	System Organ	A.I.S. Severity	Injury Source	Injury Source Confidence Level	Direct/ Indirect Injury	Occupant Area Intrusion No.
1st	5. 7	6. S	7. L	8. F	9. S	10. 2	11. 2 0	12. 1	13. 1	14. 0 0
2nd	15. 7	16. F	17. C	18. L	19. I	20. 1	21. 0 4	22. 1	23. 1	24. 0 2
3rd	25. 7	26. F	27. C	28. L	29. I	30. 1	31. 0 4	32. 1	33. 1	34. 0 2
4th	35. 7	36. F	37. I	38. L	39. I	40. 1	41. 0 4	42. 1	43. 1	44. 0 2
5th	45.	46.	47.	48.	49.	50.	51.	52.	53.	54.
6th	55.	56.	57.	58.	59.	60.	61.	62.	63.	64.
7th	65.	66.	67.	68.	69.	70.	71.	72.	73.	74.
8th	75.	76.	77.	78.	79.	80.	81.	82.	83.	84.
9th	85.	86.	87.	88.	89.	90.	91.	92.	93.	94.
10th	95.	96.	97.	98.	99.	100.	101.	102.	103.	104.

NOTE: If necessary, keep copy of original Occupant Injury form and submit as part of update.

UPDATED CASE INFORMATION

	INITIAL SUBMISSION	FINAL
GV12. Alcohol Test Results for Driver	1 6	1 6
OA05. Occupant's Age	3 1	3 1
OA06. Occupant's Sex	1	1
OA07. Occupant's Height	6 8	6 8
OA08. Occupant's Weight	1 6 0	1 6 0
OA17. Manual (Active) Belt System Availability	3	3
OA18. Manual (Active) Belt System Use	0 3	0 3
OA21. Automatic (Passive) Restraint System Availability	0	0
OA22. Automatic (Passive) Restraint Function	6	0

	INITIAL SUBMISSION	FINAL
OA35. Treatment – Mortality	4	4
OA36. Type of Medical Facility (for Initial Treatment)	1	1
OA37. Hospital Stay	0 0	0 0
OA38. Working Days Lost	6 1	6 1
OA39. Time to Death	0 0	0 0
OA40. 1st Medically Reported Cause of Death	0 0	0 0
OA41. 2nd Medically Reported Cause of Death	0 0	0 0
OA42. 3rd Medically Reported Cause of Death	0 0	0 0
OA43. Number of Recorded Injuries for This Occupant	0 4	0 5

INJURY DATA

Record below the actual injuries sustained by this occupant that were identified from the unofficial and official sources prior to initial case submission **and from subsequently** acquired medical data. Remember not to double count an injury just because it was identified from two different sources.

	Source of Injury Data	O.I.C.–A.I.S. Body Region	Aspect	Lesion	System Organ	A.I.S. Severity	Injury Source	Injury Source Confidence Level	Direct/ Indirect Injury	Occupant Area Intrusion No.
1st	5. 3	6. C	7. W	8. A	9. I	10. 2	11. 97	12. 9	13. 7	14. 00
2nd	15. 3	16. F	17. C	18. L	19. I	20. 1	21. 04	22. 1	23. 1	24. 02
3rd	25. 3	26. N	27. P	28. T	29. M	30. 1	31. 04	32. 1	33. 2	34. 02
4th	35. 7	36. S	37. L	38. F	39. S	40. 2	41. 20	42. 1	43. 1	44. 00
5th	45. 7	46. F	47. I	48. L	49. I	50. 1	51. 04	52. 1	53. 1	54. 02
6th	55.	56.	57.	58.	59.	60.	61.	62.	63.	64.
7th	65.	66.	67.	68.	69.	70.	71.	72.	73.	74.
8th	75.	76.	77.	78.	79.	80.	81.	82.	83.	84.
9th	85.	86.	87.	88.	89.	90.	91.	92.	93.	94.
10th	95.	96.	97.	98.	99.	100.	101.	102.	103.	104.
11th	105.	106.	107.	108.	109.	110.	111.	112.	113.	114.
12th	115.	116.	117.	118.	119.	120.	121.	122.	123.	124.
13th	125.	126.	127.	128.	129.	130.	131.	132.	133.	134.
14th	135.	136.	137.	138.	139.	140.	141.	142.	143.	144.
15th	145.	146.	147.	148.	149.	150.	151.	152.	153.	154.
16th	155.	156.	157.	158.	159.	160.	161.	162.	163.	164.
17th	165.	166.	167.	168.	169.	170.	171.	172.	173.	174.
18th	175.	176.	177.	178.	179.	180.	181.	182.	183.	184.
19th	185.	186.	187.	188.	189.	190.	191.	192.	193.	194.
20th	195.	196.	197.	198.	199.	200.	201.	202.	203.	204.

If greater than 20 injuries, code additional on Occupant Injury Data Supplement.

BEST AVAILABLE

OCCUPANT INJURY DATA SUPPLEMENT

	Source of Injury Data	O.I.C. – A.I.S. Body Region	Aspect	Lesion	System Organ	A.I.S. Severity	Injury Source	Injury Source Confidence Level	Direct/ Indirect Injury	Occupant Area Intrusion No.
21st	___	___	___	___	___	___	___ ___	___	___	___ ___
22nd	___	___	___	___	___	___	___ ___	___	___	___ ___
23rd	___	___	___	___	___	___	___ ___	___	___	___ ___
24th	___	___	___	___	___	___	___ ___	___	___	___ ___
25th	___	___	___	___	___	___	___ ___	___	___	___ ___
26th	___	___	___	___	___	___	___ ___	___	___	___ ___
27th	___	___	___	___	___	___	___ ___	___	___	___ ___
28th	___	___	___	___	___	___	___ ___	___	___	___ ___
29th	___	___	___	___	___	___	___ ___	___	___	___ ___
30th	___	___	___	___	___	___	___ ___	___	___	___ ___
31st	___	___	___	___	___	___	___ ___	___	___	___ ___
32nd	___	___	___	___	___	___	___ ___	___	___	___ ___
33rd	___	___	___	___	___	___	___ ___	___	___	___ ___
34th	___	___	___	___	___	___	___ ___	___	___	___ ___
35th	___	___	___	___	___	___	___ ___	___	___	___ ___
36th	___	___	___	___	___	___	___ ___	___	___	___ ___
37th	___	___	___	___	___	___	___ ___	___	___	___ ___
38th	___	___	___	___	___	___	___ ___	___	___	___ ___
39th	___	___	___	___	___	___	___ ___	___	___	___ ___
40th	___	___	___	___	___	___	___ ___	___	___	___ ___
41st	___	___	___	___	___	___	___ ___	___	___	___ ___
42nd	___	___	___	___	___	___	___ ___	___	___	___ ___
43rd	___	___	___	___	___	___	___ ___	___	___	___ ___
44th	___	___	___	___	___	___	___ ___	___	___	___ ___
45th	___	___	___	___	___	___	___ ___	___	___	___ ___

BEST AVAILABLE

OFFICIAL INJURY DATA—SOFT TISSUE INJURIES

Indicate the *Location, Lesion, Detail* (size, depth, fracture type, head injury clinical signs and neurological deficits), and *Source* of all injuries indicated by official sources (or from PAR or other unofficial sources if medical records and interviewee data are unavailable.)

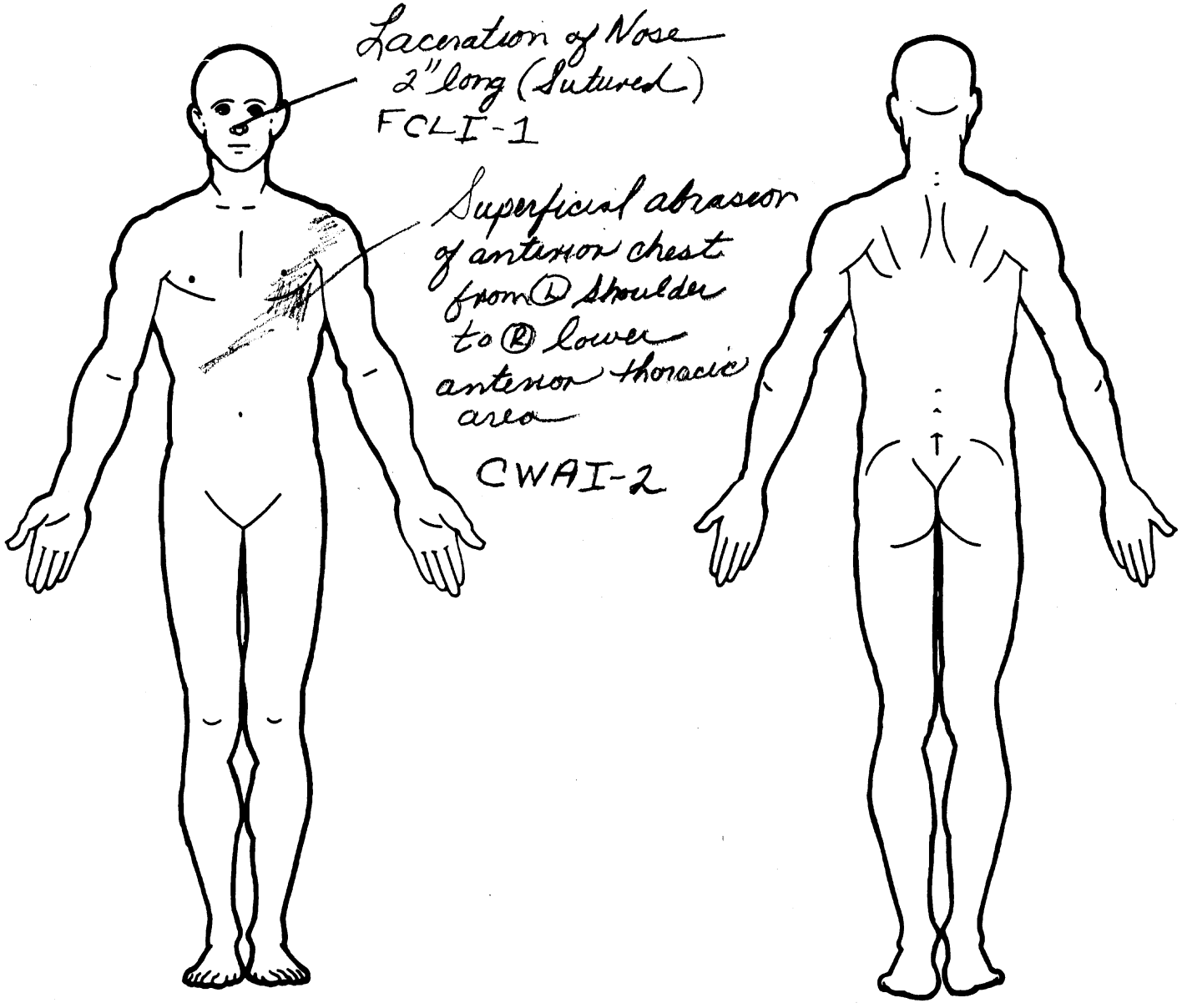

SOURCE OF INJURY DATA

OFFICIAL

(1) Autopsy records with or without hospital medical records
(2) Hospital medical records other than emergency room (eg. discharge summary)
(3) Emergency room records only (including associated X-rays or other lab reports)
(4) Private physician, walk-in or emergency clinic

UNOFFICIAL

(5) Lay coroner report
(6) E.M.S. personnel
(7) Interviewee
(8) Other source (specify): _____

(9) Police

INJURY SOURCE

FRONT

(01) Windshield
(02) Mirror
(03) Sunvisor
(04) Steering wheel rim
(05) Steering wheel hub/spoke
(06) Steering wheel (combination of codes 04 and 05)
(07) Steering column, transmission selector lever, other attachment
(08) Add-on equipment (e.g., CB, tape deck, air conditioner)
(09) Left instrument panel and below
(10) Center instrument panel and below
(11) Right instrument panel and below
(12) Glove compartment door
(13) Knee bolster
(14) Windshield including one or more of the following: front header, A-pillar, instrument panel, mirror, or steering assembly (driver side only)
(15) Windshield including one or more of the following: front header, A-pillar, instrument panel, or mirror (passenger side only)
(16) Other front object (specify): _____

LEFT SIDE

(20) Left side interior surface, excluding hardware or armrests
(21) Left side hardware or armrest
(22) Left A pillar
(23) Left B pillar
(24) Other left pillar (specify): _____

(25) Left side window glass or frame
(26) Left side window glass including one or more of the following: frame, window sill, A-pillar, B-pillar, or roof side rail
(27) Other left side object (specify): _____

RIGHT SIDE

(30) Right side interior surface, excluding hardware or armrests
(31) Right side hardware or armrest
(32) Right A pillar
(33) Right B pillar
(34) Other right pillar (specify): _____

(35) Right side window glass or frame
(36) Right side window glass including one or more of the following: frame, window sill, A-pillar, B-pillar, roof side rail
(37) Other right side object (specify): _____

INTERIOR

(40) Seat, back support
(41) Belt restraint webbing/buckle
(42) Belt restraint B-pillar attachment point
(43) Other restraint system component (specify): _____

(44) Head restraint system
(45) Air cushion
(46) Other occupants (specify): _____

(47) Interior loose objects
(48) Child safety seat (specify): _____

(49) Other interior object (specify): _____

ROOF

(50) Front header
(51) Rear header
(52) Roof left side rail
(53) Roof right side rail
(54) Roof or convertible top

FLOOR

(56) Floor including toe pan
(57) Floor or console mounted transmission lever, including console
(58) Parking brake handle
(59) Foot controls including parking brake

REAR

(60) Backlight (rear window)
(61) Backlight storage rack, door, etc.
(62) Other rear object (specify): _____

EXTERIOR OF OCCUPANT'S VEHICLE

(65) Hood
(66) Outside hardware (e.g., outside mirror, antenna)
(67) Other exterior surface or tires (specify): _____

(68) Unknown exterior objects

EXTERIOR OF OTHER MOTOR VEHICLE

(70) Front bumper
(71) Hood edge
(72) Other front of vehicle (specify): _____

(73) Hood
(74) Hood ornament
(75) Windshield, roof rail, A-pillar
(76) Side surface
(77) Side mirrors
(78) Other side protrusions (specify): _____

(79) Rear surface
(80) Undercarriage
(81) Tires and wheels
(82) Other exterior of other motor vehicle (specify): _____

(83) Unknown exterior of other motor vehicle

OTHER VEHICLE OR OBJECT IN THE ENVIRONMENT

(84) Ground
(85) Other vehicle or object (specify) _____

(86) Unknown vehicle or object

NONCONTACT INJURY

(90) Fire in vehicle
(91) Flying glass
(92) Other noncontact injury source (specify) _____

(97) Injured, unknown source

INJURY SOURCE CONFIDENCE LEVEL

(1) Certain
(2) Probable
(3) Possible
(9) Unknown

DIRECT/INDIRECT INJURY

(1) Direct contact injury
(2) Indirect contact injury
(3) Noncontact injury
(7) Injured, unknown source

OCCUPANT INJURY CLASSIFICATION

O.I.C. Body Region

(M) Abdomen
(Q) Ankle–foot
(A) Arm (upper)
(B) Back–thoracolumbar spine
(C) Chest
(E) Elbow
(F) Face
(R) Forearm
(H) Head–skull
(U) Injured, unknown region
(K) Knee
(L) Leg (lower)
(Y) Lower limb(s) (whole or unknown part)
(N) Neck–cervical spine
(P) Pelvic–hip
(S) Shoulder
(T) Thigh
(X) Upper limb(s) (whole or unknown part)
(O) Whole body
(W) Wrist–hand

Aspect of Injury

(A) Anterior–front
(C) Central
(I) Inferior–lower
(U) Injured, unknown aspect
(L) Left
(P) Posterior–back
(R) Right
(S) Superior–upper
(W) Whole region

Lesion

(A) Abrasion
(M) Amputation
(V) Avulsion
(B) Burn
(K) Concussion
(C) Contusion
(N) Crush
(G) Detachment, separation
(D) Dislocation
(F) Fracture
(Z) Fracture and dislocation
(U) Injured, unknown lesion
(L) Laceration
(O) Other
(P) Perforation, puncture
(R) Rupture
(S) Sprain
(T) Strain
(E) Total severance, transection

System/Organ

(W) All systems in region
(A) Arteries–veins
(B) Brain
(D) Digestive
(E) Ears
(O) Eye
(H) Heart
(U) Injured, unknown system
(I) Integumentary
(J) Joints
(K) Kidneys
(L) Liver
(M) Muscles
(N) Nervous system
(P) Pulmonary–lungs
(R) Respiratory
(S) Skeletal
(C) Spinal cord
(Q) Spleen
(T) Thyroid, other endocrine gland
(G) Urogenital
(V) Vertebrae

Abbreviated Injury Scale

(1) Minor injury
(2) Moderate injury
(3) Serious injury
(4) Severe injury
(5) Critical injury
(6) Maximum (untreatable)
(7) Injured, unknown severity

OFFICIAL INJURY DATA—SKELETAL INJURIES

Indicate the *Location, Lesion, Detail* (size, depth, fracture type, head injury clinical signs and neurological deficits), and *Source* of all injuries indicated by official sources (or from PAR or other unofficial sources if medical records and interviewee data are unavailable.)

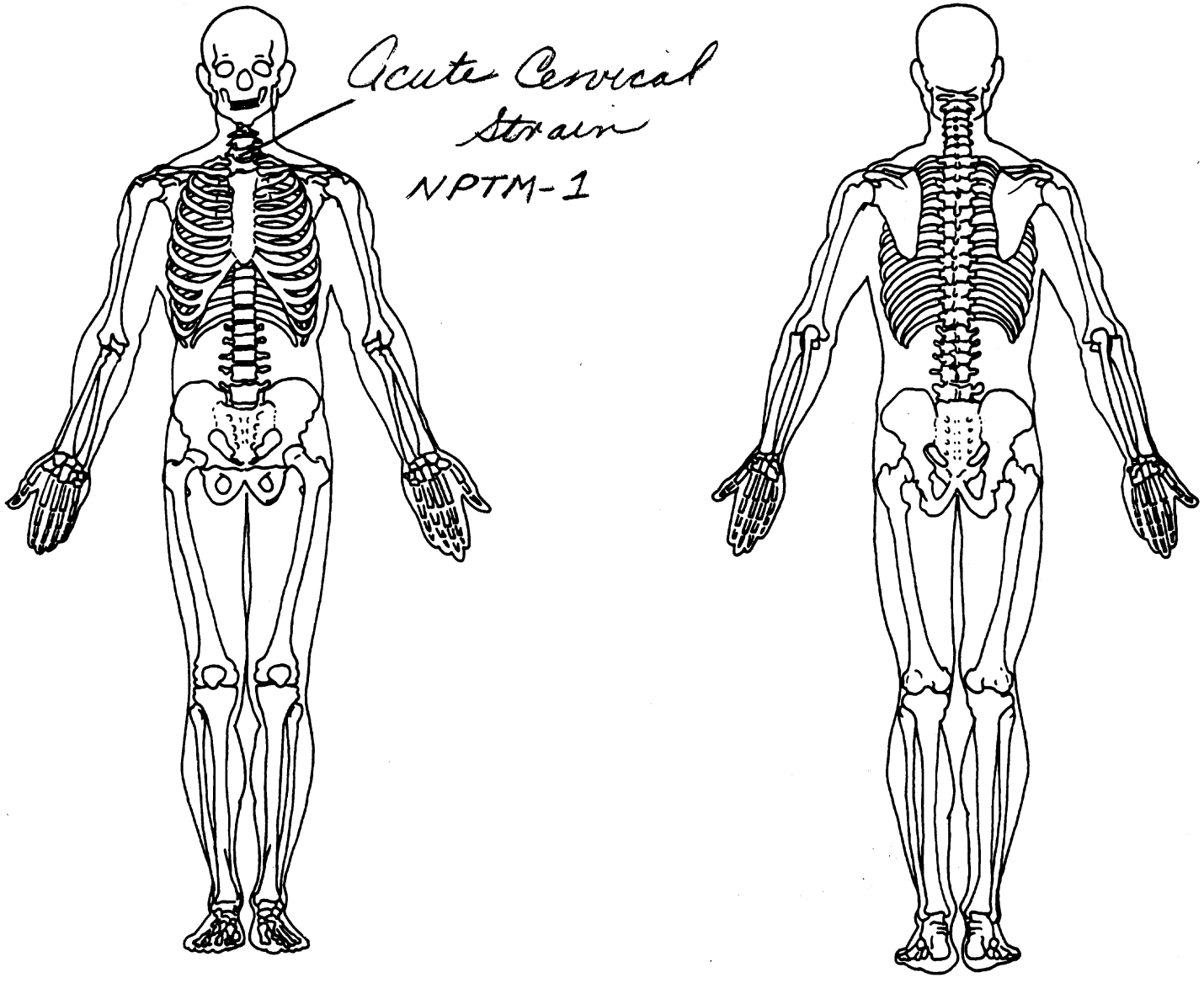

OFFICIAL INJURY DATA – INTERNAL INJURIES

Indicate the *Location, Lesion, Detail* (size, depth, fracture type, head injury clinical signs and neurological deficits), and *Source* of all injuries indicated by official sources (or from PAR or other unofficial sources if medical records and interviewee data are unavailable.)

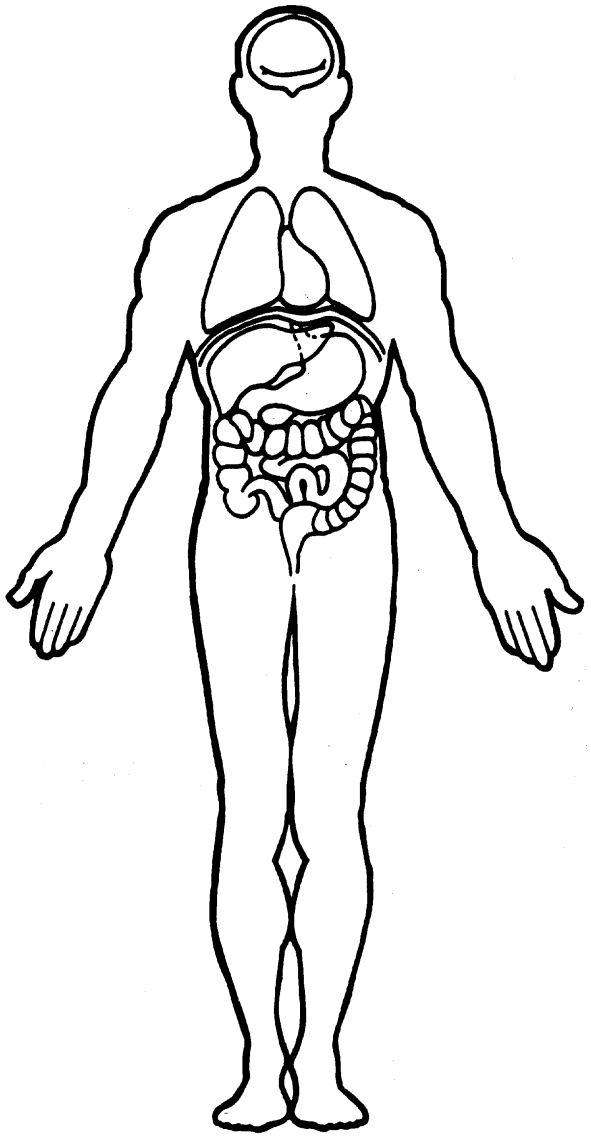

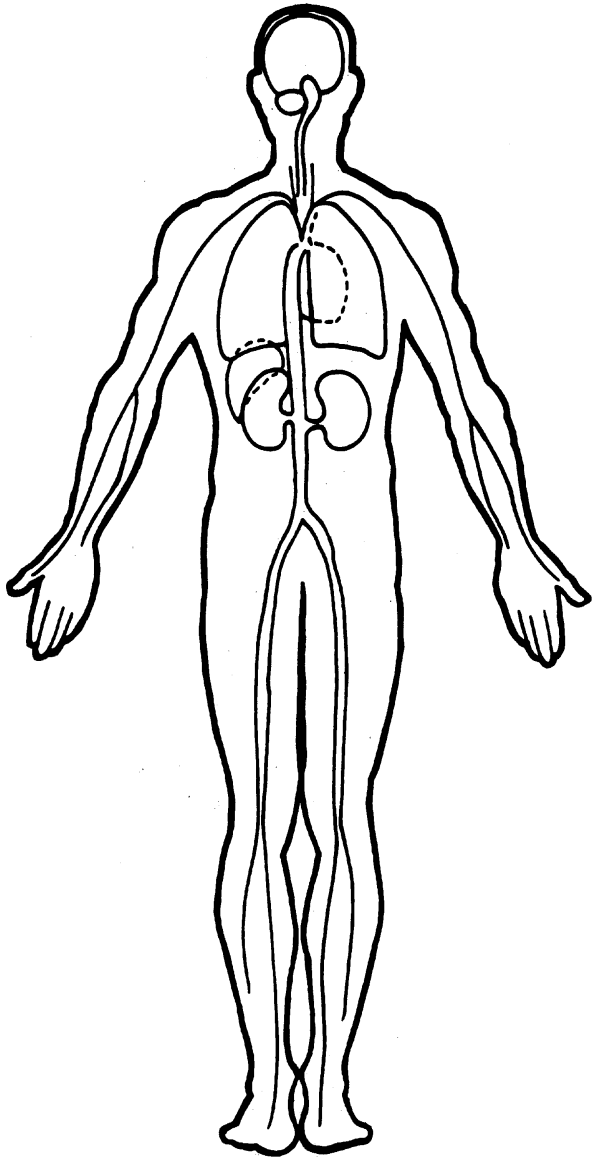

U.S. Department of Transportation
National Highway Traffic Safety Administration

EXTERIOR VEHICLE FORM

NATIONAL ACCIDENT SAMPLING SYSTEM
CRASHWORTHINESS DATA SYSTEM

1. Primary Sampling Unit Number: 1 2	3. Vehicle Number: 0 2
2. Case Number–Stratum: 0 8 2 A	

VEHICLE IDENTIFICATION

VIN 1 G 3 G M 4 7 A 1 F H [redacted] Model Year 1985

Vehicle Make (specify): Oldsmobile Vehicle Model (specify): Cutlass Supreme Brougham

LOCATOR

Locate the end of the damage with respect to the vehicle longitudinal center line or bumper corner for end impacts or an undamaged axle for side impacts.

Specific Impact No.	Location of Direct Damage	Location of Field L
1	Beg. @ (L) front corner	beg. @ (L) front corner
2	beg @ (L) rear corner	beg @ (L) rear corner

CRUSH PROFILE

NOTES: Identify the plane at which the C-measurements are taken (e.g., at bumper, above bumper, at sill, above sill, etc.) and label adjustments (e.g., free space).

Measure and document on the vehicle diagram the location of maximum crush.

Measure C1 to C6 from driver to passenger side in front or rear impacts and rear to front in side impacts.

Free space value is defined as the distance between the baseline and the original body contour taken at the individual C locations. This may include the following: bumper lead, bumper taper, side protrusion, side taper, etc. Record the value for each C-measurement and maximum crush.

Use as many lines/columns as necessary to describe each damage profile.

[redacted]

Specific Impact Number	Plane of C-Measurements	Direct Damage Width (CDC)	Direct Damage Max Crush	Field L	C_1	C_2	C_3	C_4	C_5	C_6	±D
1	beltline	95.5"	14.1"	No Meas. obtainable as impact 1							
			@ (L)	and impact 2 contaminate ea. other							
			mirror	plus (L) front quarter panel & hood							
		closest to		broken loose from vehicle also							
		undeformed		jaws of life used to open (L) front							
		therefore look		door further altering damage							
		as Cmax		from both impacts							
2	14" belowbeltline	130.5"		Not only unable to document C's due							
				to previously mentioned factors but C max							
				would have occurred in the area of the (L) rear							
				bumper corner and that bumper has been							
				torn from the vehicle in impact 2.							

HS Form 435A
1/88

VEHICLE DAMAGE SKETCH

TIRE—WHEEL DAMAGE

a. Rotation physically restricted		b. Tire deflated	
RF	2	RF	2
LF	1	LF	1
RR	2	RR	2
LR	2	LR	1

(1) Yes (2) No (8) NA (9) Unk.

TYPE OF TRANSMISSION

☐ Manual ☑ Automatic

ORIGINAL SPECIFICATIONS

Wheelbase	108.1
Overall Length	200
Maximum Width	71.6
Curb Weight	3204
Average Track	58.1
Front Overhang	41.9
Rear Overhang	50
Engine Size: cyl./ displ.	V6 / 3.8 L
Undeformed End Width	

WHEEL STEER ANGLES
(For locked front wheels or displaced rear axles only)

RF ± ___ °
LF ± ___ °
RR ± ___ °
LR ± ___ °
Within ±5 degrees

DRIVE WHEELS

☐ FWD ☑ RWD ☐ 4WD

Approximate Cargo Weight Ø

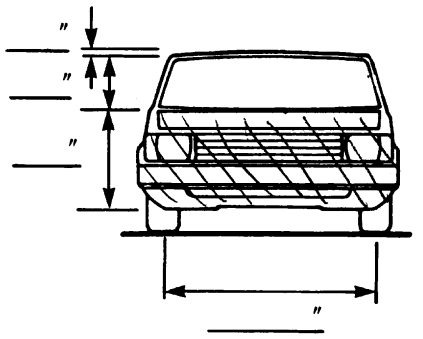

WS + all (C glass gone

Both front + rear bumpers gone

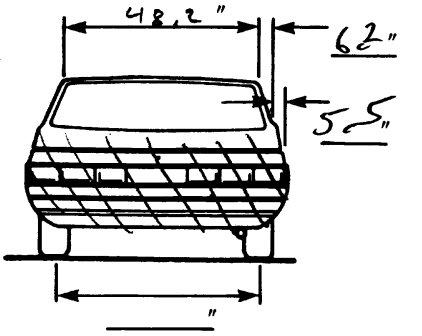

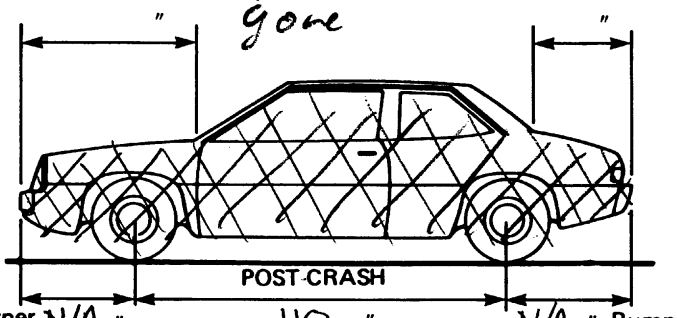

Bumper corner N/A " 110 " N/A " Bumper corner
Stringline 45 " 49.5 " Stringline

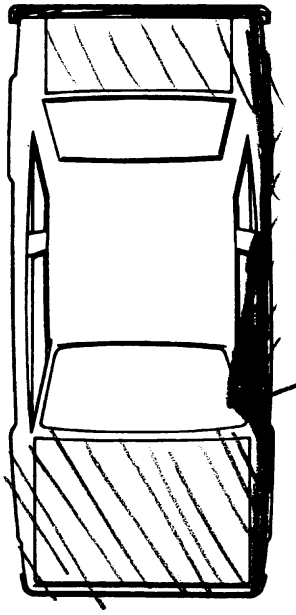

Cmex

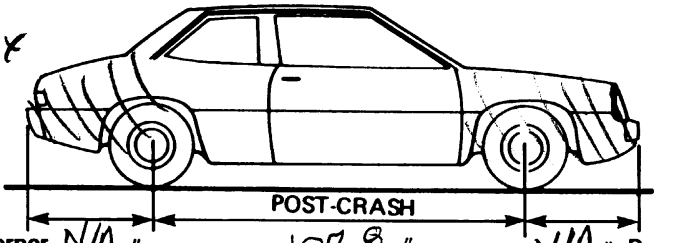

Bumper corner N/A " 107.8 " N/A " Bumper corner
Stringline 49.5" 42.5 " Stringline

NOTES: Sketch new perimeter and cross hatch direct damage and single hatch induced damage on all views. Annotate observations which might be useful in reconstructing the accident (e.g., grass in tire bead, direction of striations, scuff on sidewall, etc.). If pulling trailer, sketch type of trailer and damage received on the back of this page.
Annotate any damage caused by extrication such as component removal by torching, prying, or hydraulic shears.

CDC WORKSHEET

CODES FOR OBJECT CONTACTED

01-30—Vehicle Number

Noncollision
- (31) Overturn—rollover
- (32) Fire or explosion
- (33) Jackknife
- (34) Other intraunit damage (specify): _____
- (35) Noncollision injury
- (38) Other noncollision (specify): _____
- (39) Noncollision—details unknown

Collision with Fixed Object
- (41) Tree (≤4 inches in diameter)
- (42) Tree (>4 inches in diameter)
- (43) Shrubbery or bush
- (44) Embankment
- (45) Breakaway pole or post (any diameter)

Nonbreakaway Pole or Post
- (50) Pole or post (≤4 inches in diameter)
- (51) Pole or post (>4 but ≤12 inches in diameter)
- (52) Pole or post (>12 inches in diameter)
- (53) Pole or post (diameter unknown)
- (54) Concrete traffic barrier
- (55) Impact attenuator
- (56) Other traffic barrier (specify): _____
- (57) Fence
- (58) Wall
- (59) Building
- (60) Ditch or Culvert
- (61) Ground
- (62) Fire hydrant
- (63) Curb
- (64) Bridge
- (68) Other fixed object (specify): _____
- (69) Unknown fixed object

Collision With Nonfixed Object
- (71) Motor vehicle not in transport
- (72) Pedestrian
- (73) Cyclist or cycle
- (74) Other nonmotorist or conveyance (specify): _____
- (75) Vehicle occupant
- (76) Animal
- (77) Train
- (78) Trailer, disconnected in transport
- (88) Other nonfixed object (specify): _____
- (89) Unknown nonfixed object

(98) Other event (specify): _____

(99) Unknown event or object

DEFORMATION CLASSIFICATION BY EVENT NUMBER

Accident Event Sequence Number	Object Contacted	(1) (2) Direction of Force (degrees)	Incremental Value of Shift	(3) Deformation Location	(4) Specific Longitudinal or Lateral Location	(5) Specific Vertical or Lateral Location	(6) Type of Damage Distribution	(7) Deformation Extent
01	01	310	00	L	Y	A	W	03
02	59	250	00	L	Z	A	W	99

BEST AVAILABLE

U.S. Department of Transportation
National Highway Traffic Safety Administration

INTERIOR VEHICLE FORM

NATIONAL ACCIDENT SAMPLING SYSTEM
CRASHWORTHINESS DATA SYSTEM

1. Primary Sampling Unit Number 1 2
2. Case Number – Stratum 0 8 2 A
3. Vehicle Number 0 2

INTEGRITY

4. Passenger Compartment Integrity 98

(00) No integrity loss

Yes, Integrity Was Lost Through
(01) Windshield
(02) Door (side)
(03) Door/hatch (rear)
(04) Roof
(05) Roof glass
(06) Side window
(07) Rear window
(08) Roof and roof glass
(09) Windshield and door (side)
(10) Windshield and roof
(11) Side and rear window
(98) Other combination of above (specify): WS, (L) front side glass, (R) rear side glass
(99) Unknown 5.1

Door, Tailgate Or Hatch Opening cut open by jaws of life

5. LF 3 6. RF 1 7. LR 0 8. RR 0 9. TG/H 0

(0) No door/gate/hatch
(1) Door/gate/hatch remained closed and operational
(2) Door/gate/hatch came open during collision
(3) Door/gate/hatch jammed shut
(8) Other (specify): _____
(9) Unknown

Damage/Failure Associated with Door, Tailgate or Hatch Opening in Collision. If IV05-IV09 ≠ 2, Then Code 0.

10. LF 0 11. RF 0 12. LR 0 13. RR 0 14. TG/H 0

(0) No door/gate/hatch or door not opened

Door, Tailgate, or Hatch Came Open During Collision
(1) Door operational (no damage)
(2) Latch/striker failure due to damage
(3) Hinge failure due to damage
(4) Door structure failure due to damage
(5) Door support (i.e., pillar, sill, roof side rail, etc.) failure due to damage
(6) Latch/striker and hinge failure due to damage
(8) Other failure (specify): _____
(9) Unknown

GLAZING

Glazing Damage from Impact Forces

15. WS 4 16. LF 6 17. RF 0 18. LR 6 19. RR 0
20. BL 6 21. Roof 8 22. Other 8

(0) No glazing damage from impact forces
(2) Glazing in place and cracked from impact forces
(3) Glazing in place and holed from impact forces
(4) Glazing out-of-place (cracked or not) and not holed from impact forces
(5) Glazing out-of-place and holed from impact forces
(6) Glazing disintegrated from impact forces
(7) Glazing removed prior to accident
(8) No glazing
(9) Unknown if damaged

Glazing Damage from Occupant Contact

23. WS 9 24. LF 9 25. RF 0 26. LR 0 27. RR 0
28. BL 9 29. Roof 0 30. Other 0

(0) No occupant contact to glazing or no glazing
(1) Glazing contacted by occupant but no glazing damage
(2) Glazing in place and cracked by occupant contact
(3) Glazing in place and holed by occupant contact
(4) Glazing out-of-place (cracked or not) by occupant contact and not holed by occupant contact
(5) Glazing out-of-place by occupant contact and holed by occupant contact
(6) Glazing disintegrated by occupant contact
(9) Unknown if contacted by occupant

If No Glazing Damage ***And*** No Occupant Contact or No Glazing, Then Code IV 31 Through IV 46 As 0

Type of Window/Windshield Glazing

31. WS 1 32. LF 2 33. RF 0 34. LR 2 35. RR 0
36. BL 2 37. Roof 0 38. Other 0

(0) No glazing contact and no damage, or no glazing
(1) AS-1 – Laminated
(2) AS-2 – Tempered
(3) AS-3 – Tempered-tinted
(4) AS-14 – Glass/Plastic
(8) Other (specify): _____
(9) Unknown

Window Precrash Glazing Status

39. WS 1 40. LF 2 41. RF 0 42. LR 2 43. RR 0
44. BL 1 45. Roof 0 46. Other 0

(0) No glazing contact and no damage, or no glazing
(1) Fixed
(2) Closed
(3) Partially opened
(4) Fully opened
(9) Unknown

INTRUSION WORK SHEET

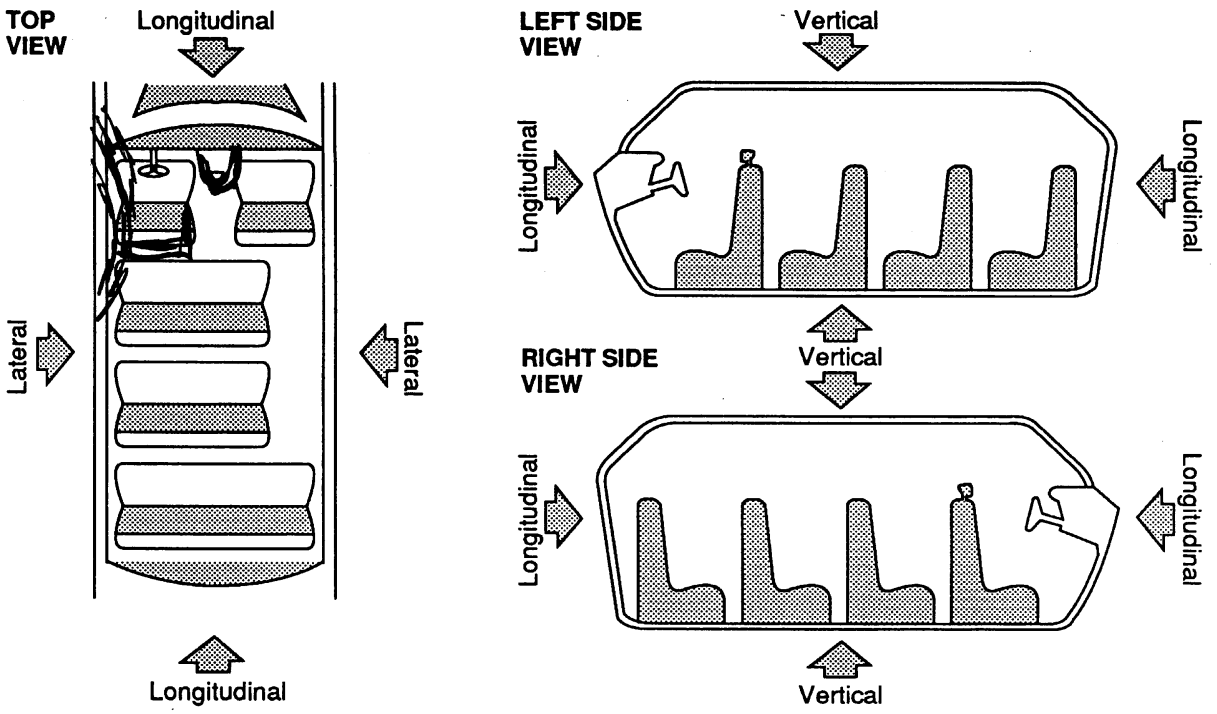

INTRUDED COMPONENT	LOCATION OF INTRUSION	DOMINANT CRUSH DIRECTION	COMPARISON VALUE	–	INTRUDED VALUE	=	INTRUSION
(L) door	11	lat.	25.5"	–	14.5"	=	11
steering column	11	vert.	26	–	from floor 31.5"	=	5.5
(L) A pillar	11	lat.	24"	–	13.5"	=	10.5
(L) front seat	21	long	18"	–	8"	=	10
(L) front seat	22	long	23"	–	13"	=	10
radio console	13	lat.	20.5"	–	19"	=	1.5
				–		=	
				–		=	
				–		=	
				–		=	
				–		=	
				–		=	
				–		=	
				–		=	
				–		=	

OCCUPANT AREA INTRUSION

Note: If no intrusions, leave variables IV 47-IV 86 blank.

	Location of Intrusion	Intruding Component	Magnitude of Intrusion	Dominant Crush Direction
1st	47. 11	48. 10	49. 3	50. 3
2nd	51. 11	52. 06	53. 3	54. 3
3rd	55. 21	56. 19	57. 3	58. 2
4th	59. 22	60. 19	61. 3	62. 2
5th	63. 11	64. 01	65. 2	66. 1
6th	67. 13	68. 03	69. 1	70. 3
7th	71.___	72.___	73.___	74.___
8th	75.___	76.___	77.___	78.___
9th	79.___	80.___	81.___	82.___
10th	83.___	84.___	85.___	86.___

LOCATION OF INTRUSION

Front Seat
- (11) Left
- (12) Middle
- (13) Right

Second Seat
- (21) Left
- (22) Middle
- (23) Right

Third Seat
- (31) Left
- (32) Middle
- (33) Right

Fourth Seat
- (41) Left
- (42) Middle
- (43) Right

(98) Other enclosed area (specify): _____

(99) Unknown

INTRUDING COMPONENT

Interior Components
- (01) Steering assembly
- (02) Instrument panel left
- (03) Instrument panel center
- (04) Instrument panel right
- (05) Toe pan
- (06) A-pillar
- (07) B-pillar
- (08) C-pillar
- (09) D-pillar
- (10) Door panel
- (11) Side panel/kickpanel
- (12) Roof (or convertible top)
- (13) Roof side rail
- (14) Windshield
- (15) Windshield header
- (16) Window frame
- (17) Floor pan
- (18) Backlight header
- (19) Front seat back
- (20) Second seat back
- (21) Third seat back
- (22) Fourth seat back
- (23) Fifth seat back
- (24) Seat cushion
- (25) Back panel or door surface
- (26) Other interior component (specify): _____

Exterior Components
- (30) Hood
- (31) Outside surface of vehicle (specify): _____
- (32) Other exterior object in the environment (specify): _____
- (33) Unknown exterior object
- (98) Intrusion of unlisted component(s) (specify): _____
- (99) Unknown

MAGNITUDE OF INTRUSION
- (1) ≥ 1 inch but < 3 inches
- (2) ≥ 3 inches but < 6 inches
- (3) ≥ 6 inches but < 12 inches
- (4) ≥ 12 inches but < 18 inches
- (5) ≥ 18 inches but < 24 inches
- (6) ≥ 24 inches
- (9) Unknown

DOMINANT CRUSH DIRECTION
- (1) Vertical
- (2) Longitudinal
- (3) Lateral
- (9) Unknown

STEERING COLUMN WORKING DIAGRAMS

STEERING COLUMN COLLAPSE

Steering Column Shear Module Movement

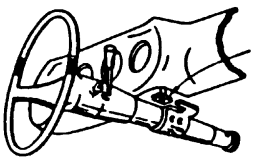

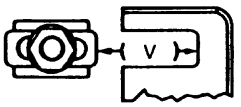

Left -.05

Right 0 V = -.05"

Direction and Magnitude of Steering Column Movement

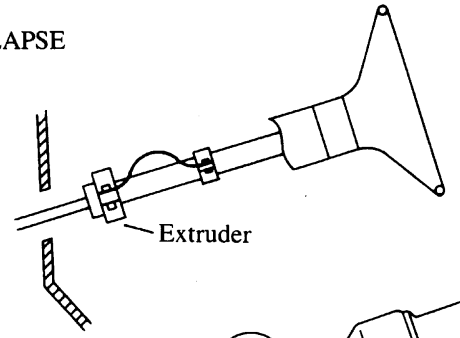

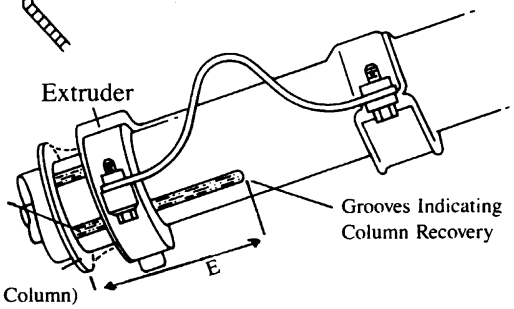

E=____

STEERING COLUMN MOVEMENT

Vertical Movement

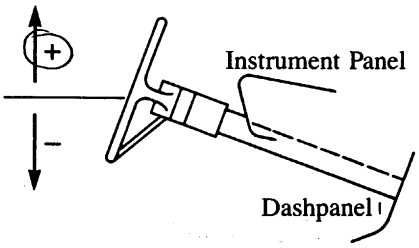

Lateral Movement

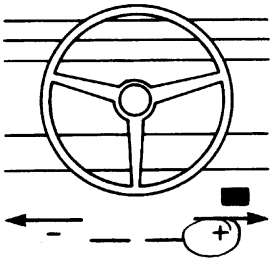

Longitudinal Movement

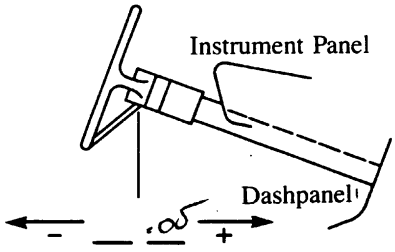

8" cent. column to cent. trans tunnel

	COMPARISON VALUE	–	DAMAGED VALUE	=	MOVEMENT
VERTICAL	26	–	31.5	=	5.5
LATERAL	13	–	8	=	5
LONGITUDINAL		–		=	

STEERING RIM/SPOKE DEFORMATION

COMPARISON VALUE	–	DAMAGED VALUE	=	DEFORMATION
	–		=	
	–		=	

STEERING COLUMN

87. Steering Column Type 2

(1) Fixed column
(2) Tilt column
(3) Telescoping column
(4) Tilt and telescoping column
(8) Other column type (specify): _____
(9) Unknown

88. Steering Column Collapse Due to Occupant Loading 01

.05 **Code actual measured movement to the nearest inch. See coding manual for measurement technique(s).**

(00) No movement, compression, or collapse
(01-49) Actual measured value
(50) 50 inches or greater

Estimated movement from observation
(81) Less than 1 inch
(82) ≥ 1 inch but < 2 inches
(83) ≥ 2 inches but < 4 inches
(84) ≥ 4 inches but < 6 inches
(85) ≥ 6 inches but < 8 inches
(86) Greater than or equal to 8 inches

(97) Apparent movement, value undetermined or cannot be measured or estimated
(98) Nonspecified type column
(99) Unknown

Direction And Magnitude of Steering Column Movement

89. Vertical Movement ± 06

90. Lateral Movement ± 05

91. Longitudinal Movement ± 01

Code the actual measured movement to the nearest inch. See Coding Manual for measurement technique(s)
(+00) No Steering column movement
(±01 – +49) Actual measured value
(±50) 50 inches or greater

Estimated movement from observation
(±81) ≥ 1 inch but < 3 inches
(±82) ≥ 3 inches but < 6 inches
(±83) ≥ 6 inches but < 12 inches
(±84) ≥ 12 inches

(__97) Apparent movement > 1 inch but cannot be measured or estimated
(__99) Unknown

92. Steering Rim/Spoke Deformation 0

0 **Code actual measured deformation to the nearest inch.**

(0) No steering rim deformation
(1-5) Actual measured value
(6) 6 inches or more
(8) Observed deformation cannot be measured
(9) Unknown

93. Location of Steering Rim/Spoke Deformation 00

(00) No steering rim deformation

Quarter Sections
(01) Section A
(02) Section B
(03) Section C
(04) Section D

Half Sections
(05) Upper half of rim/spoke
(06) Lower half of rim/spoke
(07) Left half of rim/spoke
(08) Right half of rim/spoke

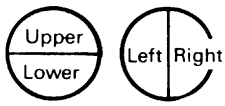

(09) Complete steering wheel collapse
(10) Undetermined location
(99) Unknown

INSTRUMENT PANEL

94. Odometer Reading 054,000

54094.3 **miles—Code mileage to the nearest 1,000 miles**

(000) No odometer
(001) Less than 1,500 miles
(300) 299,500 miles or more
(999) Unknown

Source: [redacted]

95. Instrument Panel Damage from Occupant Contact 1

(0) No
(1) Yes
(9) Unknown

96. Knee Bolsters Deformed from Occupant Contact 8

(0) No
(1) Yes
(8) Not present
(9) Unknown

97. Did Glove Compartment Door Open During Collision(s) 1

(0) No
(1) Yes
(8) Not present
(9) Unknown

VEHICLE INTERIOR SKETCHES

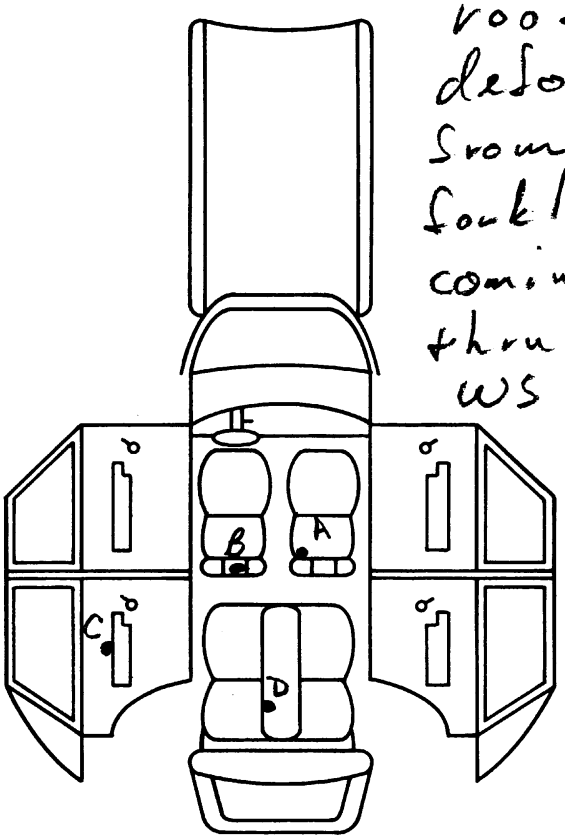

roof deformed from fork lift coming thru WS and lifting veh @ tow yard

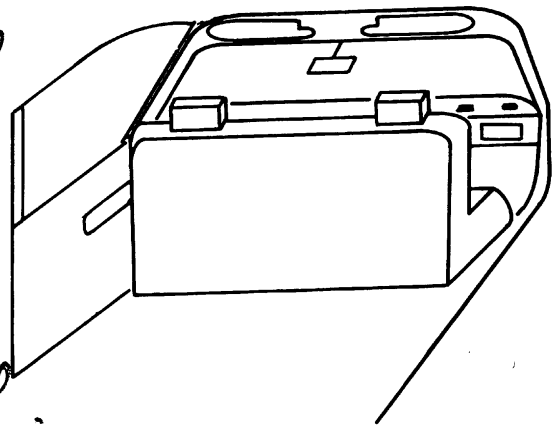

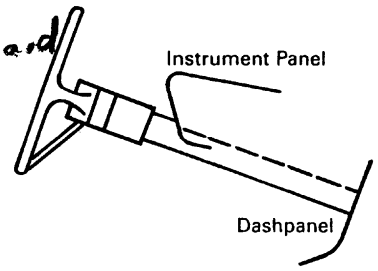

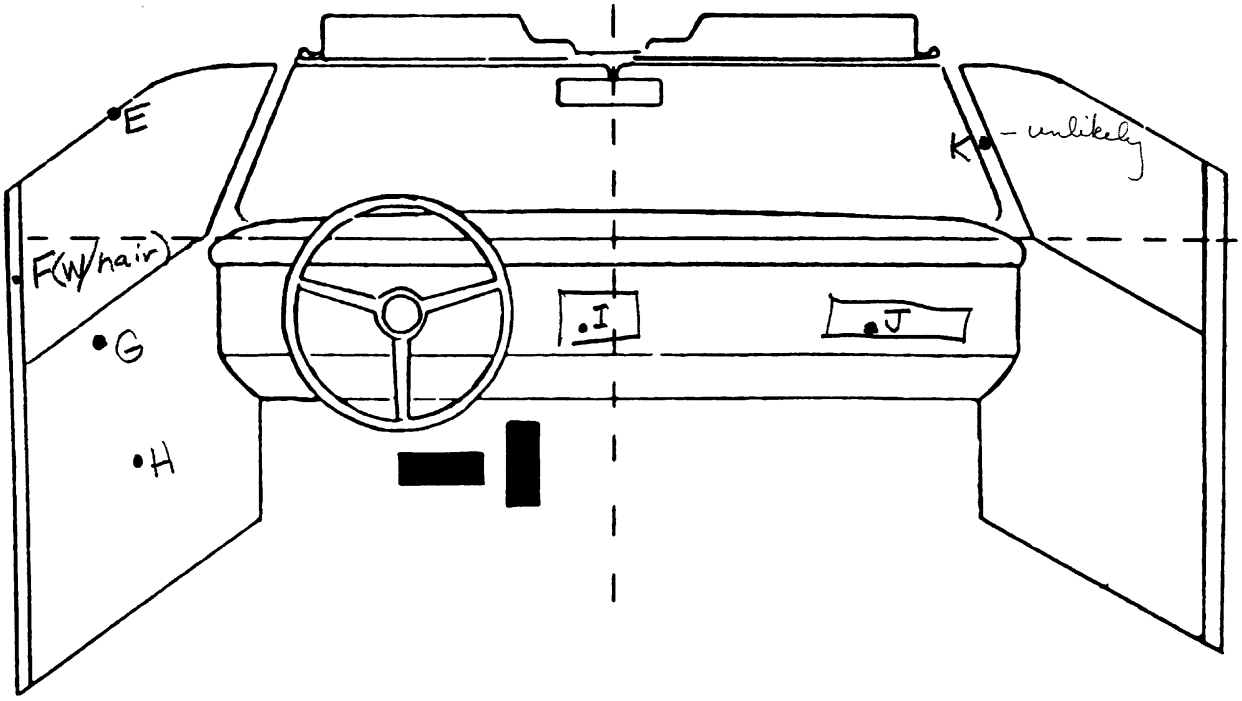

POINTS OF OCCUPANT CONTACT

Contact	Interior Component Contacted	Occupant No. If Known	Body Region If Known	Supporting Physical Evidence	Confidence Level of Contact Point
A	(P) front seat back	13	shoulder	seat bent	1
B	40	11	back	bent to rear	1
C	20	22	unk	scuff	2
D	40	22	unk	dented to rear	1
E	25	13	unk	scuffed	1
F	23	13	head	dented w/ hair	1
G	20	11-13	unk	dented	1
H	21	11-13	unk	fx	1
I	10	13	knee	radio knob bent (L)	1
J	12	13	knee	scuff	1
K	32	13	unk	scuffed	3
L					
M					
N					

CODES FOR INTERIOR COMPONENTS

FRONT
- (01) Windshield
- (02) Mirror
- (03) Sunvisor
- (04) Steering wheel rim
- (05) Steering wheel hub/spoke
- (06) Steering wheel (combination of codes 04 and 05)
- (07) Steering column, transmission selector lever, other attachment
- (08) Add on equipment (e.g., CB, tape deck, air conditioner)
- (09) Left instrument panel and below
- (10) Center instrument panel and below
- (11) Right instrument panel and below
- (12) Glove compartment door
- (13) Knee bolster
- (14) Windshield including one or more of the following: front header, A-pillar, instrument panel, mirror,or steering assembly (driver side only)
- (15) Windshield including one or more of the following: front header, A-pillar, instrument panel, or mirror (passenger side only)
- (16) Other front object (specify): _____

LEFT SIDE
- (20) Left side interior surface, excluding hardware or armrests
- (21) Left side hardware or armrest
- (22) Left A pillar
- (23) Left B pillar
- (24) Other left pillar (specify): _____
- (25) Left side window glass or frame
- (26) Left side window glass including one or more of the following: frame, window sill, A-pillar, B-pillar, or roof side rail
- (27) Other left side object (specify): _____

RIGHT SIDE
- (30) Right side interior surface, excluding hardware or armrests
- (31) Right side hardware or armrest
- (32) Right A pillar
- (33) Right B pillar
- (34) Other right pillar (specify): _____
- (35) Right side window glass or frame
- (36) Right side window glass including one or more of the following: frame, window sill, A-pillar, B-pillar, or roof side rail
- (37) Other right side object (specify): _____

INTERIOR
- (40) Seat, back support
- (41) Belt restraint webbing/buckle
- (42) Belt restraint B-pillar attachment point
- (43) Other restraint system component (specify): _____
- (44) Head restraint system
- (45) Air cushion
- (46) Other occupants (specify): _____
- (47) Interior loose objects
- (48) Child safety seat (specify): _____
- (49) Other interior object (specify): _____

ROOF
- (50) Front header
- (51) Rear header
- (52) Roof left side rail
- (53) Roof right side rail
- (54) Roof or convertible top

FLOOR
- (56) Floor including toe pan
- (57) Floor or console mounted transmission lever, including console
- (58) Parking brake handle
- (59) Foot controls including parking brake

REAR
- (60) Backlight (rear window)
- (61) Backlight storage rack, door, etc.
- (62) Other rear object (specify): _____

CONFIDENCE LEVEL OF CONTACT POINT
- (1) Certain
- (2) Probable
- (3) Possible
- (4) Unknown

BEST AVAILABLE

AUTOMATIC RESTRAINTS

NOTES: Encode the data for each applicable front seat position. The attributes for the variables may be found below. Restraint systems should be assessed during the vehicle inspection then coded on the Occupant Assessment Form.

		Left	Center	Right
FIRST	Availability	0	0	0
	Function	0	0	0
	Failure	0	0	0

Automatic (Passive) Restraint System Availability

(0) Not equipped/not available
(1) Airbag
(2) Airbag disconnected (specify):

_____

(3) Airbag not reinstalled
(4) 2 point automatic belts
(5) 3 point automatic belts
(6) Automatic belts destroyed or rendered inoperative
(9) Unknown

Automatic (Passive) Restraint Function

(0) Not equipped/not available

Automatic Belt
(1) Automatic belt in use
(2) Automatic belt not in use
(3) Automatic belt use unknown

Air Bag
(4) Airbag deployed during accident
(5) Airbag deployed inadvertently just prior to accident
(6) Deployed, accident sequence undetermined
(7) Nondeployed
(8) Unknown if deployed
(9) Unknown

Did Automatic (Passive) Restraint Fail

(0) Not equipped/not available
(1) No
(2) Yes (specify): _____
(9) Unknown

MANUAL RESTRAINTS

NOTES: Encode the applicable data **for each seat position** in the vehicle. The attributes for the variables may be found below. Restraint systems should be assessed during the vehicle inspection then coded on the Occupant Assessment Form.

If a child safety seat is present, encode the data on the back of this page.

If the vehicle has automatic restraints available, encode the appropriate data on the back of the previous page.

		Left	Center	Right
FIRST	Availability	4		4
	Use	04		04
	Failure Modes	1		0
SECOND	Availability	3	3	3
	Use	03	03	03
	Failure Modes	0	0	0
THIRD	Availability			
	Use			
	Failure Modes			
OTHER	Availability			
	Use			
	Failure Modes			

Manual (Active) Belt System Availability

(0) Not available
(1) Belt removed/destroyed
(2) Shoulder belt
(3) Lap belt
(4) Lap and shoulder belt
(5) Belt available — type unknown
(8) Other belt (specify):

_____

(9) Unknown

Manual (Active) Belt System Use

(00) None used, not available, or belt removed/destroyed
(01) Inoperative (specify):

_____

(02) Shoulder belt
(03) Lap belt
(04) Lap and shoulder belt
(05) Belt used — type unknown

_____

(08) Other belt used (specify):

_____

(12) Shoulder belt used with child safety seat
(13) Lap belt used with child safety seat
(14) Lap and shoulder belt used with child safety seat
(15) Belt used with child safety seat — type unknown
(18) Other belt used with child safety seat (specify):

_____

(99) Unknown if belt used

Manual (Active) Belt Failure Modes During Accident

(0) No manual belt used or not available
(1) No manual belt failure(s)
(2) Manual belt failure(s) (encode all that apply above)
[A] Torn webbing (stretched webbing not included)
[B] Broken buckle or latchplate
[C] Upper anchorage separated
[D] Other achorage separated (specify):

_____

[E] Broken retractor
[F] Other manual belt failure (specify):

_____

(9) Unknown

CHILD SAFETY SEAT FIELD ASSESSMENT

When a child safety seat is present enter the occupant's number in the first row and complete the column below the occupant's number using the codes listed below. Complete a column for each child safety seat present.

Occupant Number						
1. Type of Child Safety Seat						
2. Child Safety Seat Orientation						
3. Child Safety Seat Harness Usage						
4. Child Safety Seat Shield Usage						
5. Child Safety Seat Tether Usage						
6. Child Safety Seat Make/Model	Specify Below for Each Child Safety Seat					

1. Type of Child Safety Seat

   (0) No child safety seat
   (1) Infant seat
   (2) Toddler seat
   (3) Convertible seat
   (4) Booster seat
   (7) Other type child safety seat (specify):

   _____

   (8) Unknown child safety seat type
   (9) Unknown if child safety seat used

2. Child Safety Seat Orientation

   (00) No child safety seat

   Designed for Rear Facing for This Age/Weight
   (01) Rear facing
   (02) Forward facing
   (03) Other orientation (specify):

   _____

   (04) Unknown orientation

   Designed for Forward Facing for This Age/Weight
   (11) Rear facing
   (12) Forward facing
   (18) Other orientation (specify):

   _____

   (19) Unknown orientation

   Unknown Design or Orientation for This Age/Weight, or Unknown Age/Weight
   (21) Rear facing
   (22) Forward facing
   (28) Other orientation (specify):

   _____

   (29) Unknown orientation

   (99) Unknown if child safety seat used

3. Child Safety Seat Harness Usage

4. Child Safety Seat Shield Usage

5. Child Safety Seat Tether Usage

   Note: Options Below Are Used for Variables 3-5.

   (00) No child safety seat

   Not Designed with Harness/Shield/Tether
   (01) After market harness/shield/tether added, not used
   (02) After market harness/shield/tether used
   (03) Child safety seat used, but no after market harness/shield/tether added
   (09) Unknown if harness/shield/tether added or used

   Designed with Harness/Shield/Tether
   (11) Harness/shield/tether not used
   (12) Harness/shield/tether used
   (19) Unknown if harness/shield/tether used

   Unknown if Designed with Harness/Shield/Tether
   (21) Harness/shield/tether not used
   (22) Harness/shield/tether used
   (29) Unknown if harness/shield/tether used

   (99) Unknown if child safety seat used

6. Child Safety Seat Make/Model
   (Specify make/model and occupant number)

   _____

   _____

   _____

   _____

HEAD RESTRAINTS/SEAT EVALUATION

NOTES: Encode the applicable data for **each seat position** in the vehicle. The attributes for these variables may be found at the bottom of the page. Head restraint type/damage and seat type/performance should be assessed during the vehicle inspection then coded on the Occupant Assessment Form.

		Left	Center	Right
FIRST	Head Restraint Type/Damage	4		3
	Seat Type	07		07
	Seat Performance	2B		1
SECOND	Head Restraint Type/Damage	2	2	2
	Seat Type	06	06	06
	Seat Performance	0	2F	0
THIRD	Head Restraint Type/Damage			
	Seat Type			
	Seat Performance			
OTHER	Head Restraint Type/Damage			
	Seat Type			
	Seat Performance			

Head Restraint Type/Damage by Occupant at This Occupant Position

(0) No head restraints
(1) Integral — no damage
(2) Integral — damaged during accident
(3) Adjustable — no damage
(4) Adjustable — damaged during accident
(5) Add-on — no damage
(6) Add-on — damaged during accident
(8) Other (specify): _____
(9) Unknown

Seat Type (This Occupant Position)

(00) Occupant not seated or no seat
(01) Bucket
(02) Bucket with folding back
(03) Bench
(04) Bench with separate back cushions
(05) Bench with folding back(s)
(06) Split bench with separate back cushions
(07) Split bench with folding back(s)
(08) Pedestal (i.e., van type)
(09) Other seat type (specify): _____
(99) Unknown

Seat Performance (This Occupant Position)

(0) Occupant not seated or no seat
(1) No seat performance failure(s)

(2) Seat performance failure(s)
(Encode all that apply)

[A] Seat adjusters failed
[B] Seat back folding locks failed
[C] Seat tracks failed
[D] Seat anchors failed
[E] Deformed by impact of passenger from rear
[F] Deformed by impact of passenger from front
[G] Deformed by own inertial forces
[H] Deformed by passenger compartment intrusion (specify):

_____
_____
_____

[I] Other (specify): _____
_____

(9) Unknown

DESCRIBE ANY INDICATION OF ABNORMAL OCCUPANT POSTURE (I.E. UNUSUAL OCCUPANT CONTACT PATTERN)

EJECTION/ENTRAPMENT DATA

Complete the following if the researcher has any indications that an occupant was either ejected from or entrapped in the vehicle. Code the appropriate data on the Occupant Assessment Form.

EJECTION No [ ] Yes [ ]

Describe indications of ejection and body parts involved in partial ejection(s):

Both occs #2 + #3 were completely ejected it appears #2 went thru (D) sideglass over driver – and 03 went out thru backlight as V2 pivoted while striking building

Occupant Number	2	3				
Ejection	1	1				
Ejection Area	2	6				
Ejection Medium	4	3				
Medium Status	2	3				

Ejection
(1) Complete ejection
(2) Partial ejection
(3) Ejection, unknown degree
(9) Unknown

Ejection Area
(1) Windshield
(2) Left front
(3) Right front
(4) Left rear
(5) Right rear
(6) Rear
(7) Roof
(8) Other area (e.g., back of pickup, etc.) (specify): _____
(9) Unknown

Ejection Medium
(1) Door/hatch/tailgate
(2) Nonfixed roof structure
(3) Fixed glazing
(4) Nonfixed glazing (specify): sideglass
(5) Integral structure
(8) Other medium (specify): _____
(9) Unknown

Medium Status (Immediately Prior to Impact)
(1) Open
(2) Closed
(3) Integral structure
(9) Unknown

ENTRAPMENT No [✓] Yes [ ]

Describe entrapment mechanism: _____

Component(s): _____

(Note in vehicle interior diagram)

BEST AVAILABLE

PSU NUMBER 12

CASE NUMBER 082A

VEHICLE NUMBER 02

OCCUPANT NUMBER 01

OCCUPANT INJURY FORM

THE FOLLOWING DATA IS NOT INCLUDED IN THIS CASE:

[✓] ENTIRE FORM

[] PAGE NUMBER (S) _____

U.S. Department of Transportation
National Highway Traffic Safety Administration

UPDATE FORM

NATIONAL ACCIDENT SAMPLING SYSTEM
CRASHWORTHINESS DATA SYSTEM

1. Primary Sampling Unit Number 1 2
2. Case Number – Stratum 0 8 2 4
3. Vehicle Number 0 2
4. Occupant Number 0 1

RECEIVED [redacted] 1988

Driver or Occupant Name: _____

Address: _____

Other Information: _____

(Sanitize this section prior to Update submission.)

INJURY DATA CODED ON INITIAL SUBMISSION

	Source of Injury Data	O.I.C. – A.I.S. Body Region	Aspect	Lesion	System Organ	A.I.S. Severity	Injury Source	Injury Source Confidence Level	Direct/ Indirect Injury	Occupant Area Intrusion No.
1st	5.	6.	7.	8.	9.	10.	11.	12.	13.	14.
2nd	15.	16.	17.	18.	19.	20.	21.	22.	23.	24.
3rd	25.	26.	27.	28.	29.	30.	31.	32.	33.	34.
4th	35.	36.	37.	38.	39.	40.	41.	42.	43.	44.
5th	45.	46.	47.	48.	49.	50.	51.	52.	53.	54.
6th	55.	56.	57.	58.	59.	60.	61.	62.	63.	64.
7th	65.	66.	67.	68.	69.	70.	71.	72.	73.	74.
8th	75.	76.	77.	78.	79.	80.	81.	82.	83.	84.
9th	85.	86.	87.	88.	89.	90.	91.	92.	93.	94.
10th	95.	96.	97.	98.	99.	100.	101.	102.	103.	104.

NOTE: If necessary, keep copy of original Occupant Injury form and submit as part of update.

UPDATED CASE INFORMATION

	INITIAL SUBMISSION	FINAL
GV12. Alcohol Test Results for Driver	96	96
OA05. Occupant's Age	46	46
OA06. Occupant's Sex	2	2
OA07. Occupant's Height	64	64
OA08. Occupant's Weight	165	165
OA17. Manual (Active) Belt System Availability	4	4
OA18. Manual (Active) Belt System Use	04	04
OA21. Automatic (Passive) Restraint System Availability	0	0
OA22. Automatic (Passive) Restraint Function	0	0

	INITIAL SUBMISSION	FINAL
OA35. Treatment – Mortality	1	1
OA36. Type of Medical Facility (for Initial Treatment)	1	1
OA37. Hospital Stay	00	00
OA38. Working Days Lost	62	62
OA39. Time to Death	99	99
OA40. 1st Medically Reported Cause of Death	00	00
OA41. 2nd Medically Reported Cause of Death	00	00
OA42. 3rd Medically Reported Cause of Death	00	00
OA43. Number of Recorded Injuries for This Occupant	00	19

HS Form 433C
1/88

INJURY DATA

Record below the actual injuries sustained by this occupant that were identified from the unofficial and official sources prior to initial case submission **and from subsequently** acquired medical data. Remember not to double count an injury just because it was identified from two different sources.

	Source of Injury Data	O.I.C. – A.I.S. Body Region	Aspect	Lesion	System Organ	A.I.S. Severity	Injury Source	Injury Source Confidence Level	Direct/ Indirect Injury	Occupant Area Intrusion No.
1st	5. 2	6. Q	7. R	8. C	9. I	10. 1	11. 97	12. 9	13. 7	14. 00
2nd	15. 2	16. Q	17. R	18. L	19. I	20. 1	21. 97	22. 9	23. 7	24. 00
3rd	25. 2	26. T	27. R	28. C	29. I	30. 1	31. 97	32. 9	33. 7	34. 00
4th	35. 2	36. L	37. L	38. A	39. I	40. 1	41. 97	42. 9	43. 7	44. 00
5th	45. 2	46. T	47. L	48. A	49. I	50. 1	51. 97	52. 9	53. 7	54. 00
6th	55. 2	56. T	57. L	58. L	59. I	60. 1	61. 97	62. 9	63. 7	64. 00
7th	65. 2	66. T	67. L	68. C	69. I	70. 1	71. 97	72. 9	73. 7	74. 00
8th	75. 2	76. M	77. W	78. L	79. I	80. 1	81. 97	82. 9	83. 7	84. 00
9th	85. 2	86. W	87. R	88. L	89. I	90. 1	91. 97	92. 9	93. 7	94. 00
10th	95. 2	96. E	97. R	98. C	99. I	100. 1	101. 97	102. 9	103. 7	104. 00
11th	105. 2	106. E	107. R	108. A	109. I	110. 1	111. 97	112. 9	113. 7	114. 00
12th	115. 2	116. A	117. L	118. L	119. I	120. 1	121. 97	122. 9	123. 7	124. 00
13th	125. 2	126. R	127. L	128. L	129. I	130. 1	131. 97	132. 9	133. 7	134. 00
14th	135. 2	136. W	137. L	138. P	139. I	140. 1	141. 97	142. 9	143. 7	144. 00
15th	145. 2	146. H	147. R	148. C	149. I	150. 1	151. 97	152. 9	153. 7	154. 00
16th	155. 2	156. H	157. R	158. L	159. I	160. 1	161. 97	162. 9	163. 7	164. 00
17th	165. 2	166. F	167. I	168. L	169. I	170. 1	171. 97	172. 9	173. 7	174. 00
18th	175. 2	176. F	177. R	178. L	179. I	180. 2	181. 97	182. 9	183. 7	184. 00
19th	185. 2	186. H	187. S	188. L	189. I	190. 2	191. 97	192. 9	193. 7	194. 00
20th	195.	196.	197.	198.	199.	200.	201.	202.	203.	204.

If greater than 20 injuries, code additional on Occupant Injury Data Supplement.

BEST AVAILABLE

OCCUPANT INJURY DATA SUPPLEMENT

	Source of Injury Data	O.I.C. – A.I.S.					Injury Source	Injury Source Confidence Level	Direct/ Indirect Injury	Occupant Area Intrusion No.
		Body Region	Aspect	Lesion	System Organ	A.I.S. Severity				
21st	—	—	—	—	—	—	— —	—	—	— —
22nd	—	—	—	—	—	—	— —	—	—	— —
23rd	—	—	—	—	—	—	— —	—	—	— —
24th	—	—	—	—	—	—	— —	—	—	— —
25th	—	—	—	—	—	—	— —	—	—	— —
26th	—	—	—	—	—	—	— —	—	—	— —
27th	—	—	—	—	—	—	— —	—	—	— —
28th	—	—	—	—	—	—	— —	—	—	— —
29th	—	—	—	—	—	—	— —	—	—	— —
30th	—	—	—	—	—	—	— —	—	—	— —
31st	—	—	—	—	—	—	— —	—	—	— —
32nd	—	—	—	—	—	—	— —	—	—	— —
33rd	—	—	—	—	—	—	— —	—	—	— —
34th	—	—	—	—	—	—	— —	—	—	— —
35th	—	—	—	—	—	—	— —	—	—	— —
36th	—	—	—	—	—	—	— —	—	—	— —
37th	—	—	—	—	—	—	— —	—	—	— —
38th	—	—	—	—	—	—	— —	—	—	— —
39th	—	—	—	—	—	—	— —	—	—	— —
40th	—	—	—	—	—	—	— —	—	—	— —
41st	—	—	—	—	—	—	— —	—	—	— —
42nd	—	—	—	—	—	—	— —	—	—	— —
43rd	—	—	—	—	—	—	— —	—	—	— —
44th	—	—	—	—	—	—	— —	—	—	— —
45th	—	—	—	—	—	—	— —	—	—	— —

OFFICIAL INJURY DATA – SOFT TISSUE INJURIES

Indicate the *Location, Lesion, Detail* (size, depth, fracture type, head injury clinical signs and neurological deficits), and *Source* of all injuries indicated by official sources (or from PAR or other unofficial sources if medical records and interviewee data are unavailable.)

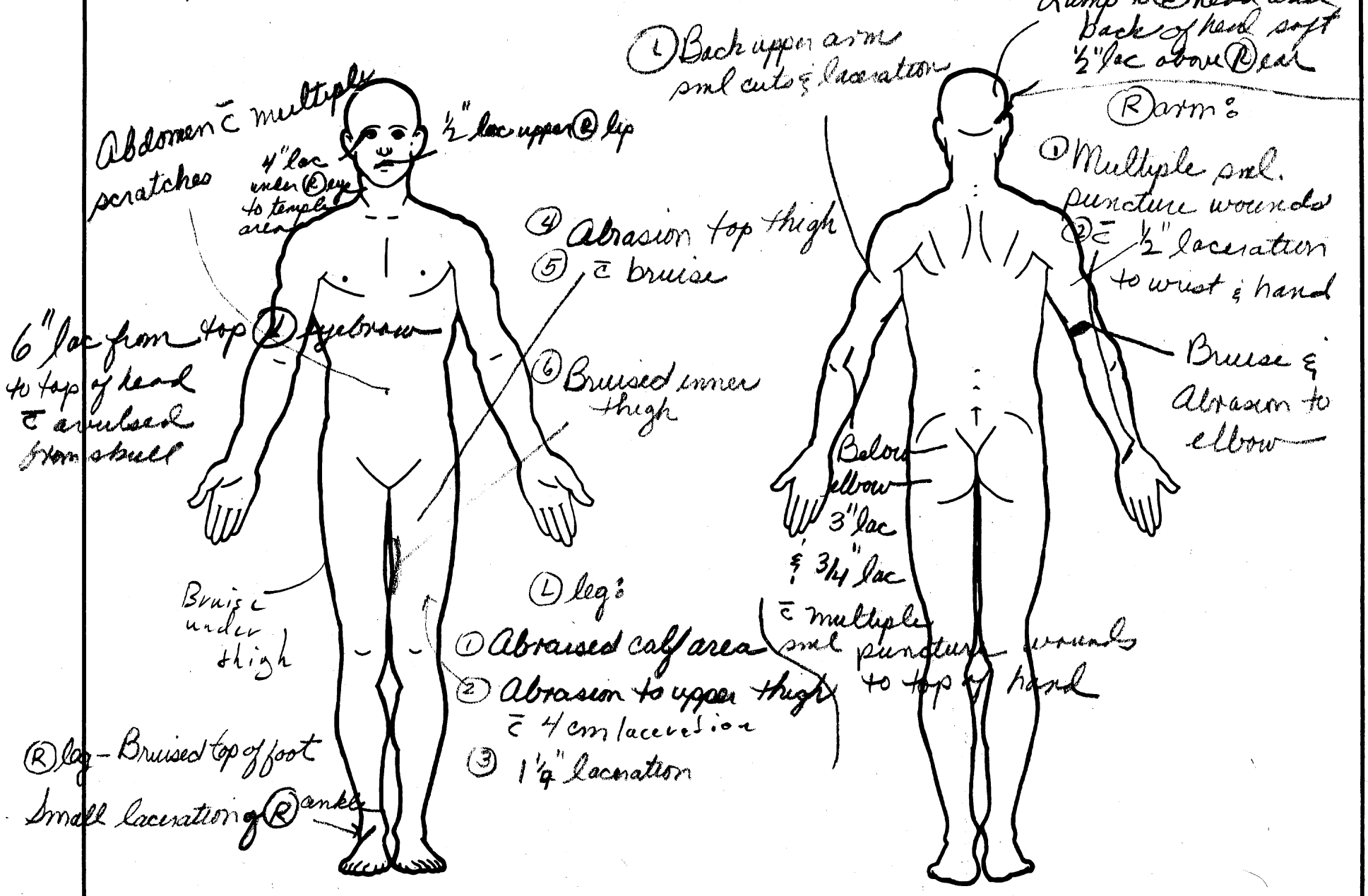

BEST AVAILABLE

SOURCE OF INJURY DATA

OFFICIAL

(1) Autopsy records with or without hospital medical records
(2) Hospital medical records other than emergency room (eg. discharge summary)
(3) Emergency room records only (including associated X-rays or other lab reports)
(4) Private physician, walk-in or emergency clinic

UNOFFICIAL

(5) Lay coroner report
(6) E.M.S. personnel
(7) Interviewee
(8) Other source (specify): _____

(9) Police

INJURY SOURCE

FRONT

(01) Windshield
(02) Mirror
(03) Sunvisor
(04) Steering wheel rim
(05) Steering wheel hub/spoke
(06) Steering wheel (combination of codes 04 and 05)
(07) Steering column, transmission selector lever, other attachment
(08) Add-on equipment (e.g., CB, tape deck, air conditioner)
(09) Left instrument panel and below
(10) Center instrument panel and below
(11) Right instrument panel and below
(12) Glove compartment door
(13) Knee bolster
(14) Windshield including one or more of the following: front header, A-pillar, instrument panel, mirror, or steering assembly (driver side only)
(15) Windshield including one or more of the following: front header, A-pillar, instrument panel, or mirror (passenger side only)
(16) Other front object (specify): _____

LEFT SIDE

(20) Left side interior surface, excluding hardware or armrests
(21) Left side hardware or armrest
(22) Left A pillar
(23) Left B pillar
(24) Other left pillar (specify): _____

(25) Left side window glass or frame
(26) Left side window glass including one or more of the following: frame, window sill, A-pillar, B-pillar, or roof side rail
(27) Other left side object (specify): _____

RIGHT SIDE

(30) Right side interior surface, excluding hardware or armrests
(31) Right side hardware or armrest
(32) Right A pillar
(33) Right B pillar
(34) Other right pillar (specify): _____

(35) Right side window glass or frame
(36) Right side window glass including one or more of the following: frame, window sill, A-pillar, B-pillar, roof side rail
(37) Other right side object (specify): _____

INTERIOR

(40) Seat, back support
(41) Belt restraint webbing/buckle
(42) Belt restraint B-pillar attachment point
(43) Other restraint system component (specify): _____

(44) Head restraint system
(45) Air cushion
(46) Other occupants (specify): _____

(47) Interior loose objects
(48) Child safety seat (specify): _____

(49) Other interior object (specify): _____

ROOF

(50) Front header
(51) Rear header
(52) Roof left side rail
(53) Roof right side rail
(54) Roof or convertible top

FLOOR

(56) Floor including toe pan
(57) Floor or console mounted transmission lever, including console
(58) Parking brake handle
(59) Foot controls including parking brake

REAR

(60) Backlight (rear window)
(61) Backlight storage rack, door, etc.
(62) Other rear object (specify): _____

EXTERIOR OF OCCUPANT'S VEHICLE

(65) Hood
(66) Outside hardware (e.g., outside mirror, antenna)
(67) Other exterior surface or tires (specify): _____

(68) Unknown exterior objects

EXTERIOR OF OTHER MOTOR VEHICLE

(70) Front bumper
(71) Hood edge
(72) Other front of vehicle (specify): _____

(73) Hood
(74) Hood ornament
(75) Windshield, roof rail, A-pillar
(76) Side surface
(77) Side mirrors
(78) Other side protrusions (specify): _____

(79) Rear surface
(80) Undercarriage
(81) Tires and wheels
(82) Other exterior of other motor vehicle (specify): _____

(83) Unknown exterior of other motor vehicle

OTHER VEHICLE OR OBJECT IN THE ENVIRONMENT

(84) Ground
(85) Other vehicle or object (specify) _____

(86) Unknown vehicle or object

NONCONTACT INJURY

(90) Fire in vehicle
(91) Flying glass
(92) Other noncontact injury source (specify) _____

(97) Injured, unknown source

INJURY SOURCE CONFIDENCE LEVEL

(1) Certain
(2) Probable
(3) Possible
(9) Unknown

DIRECT/INDIRECT INJURY

(1) Direct contact injury
(2) Indirect contact injury
(3) Noncontact injury
(7) Injured, unknown source

OCCUPANT INJURY CLASSIFICATION

O.I.C. Body Region

(M) Abdomen
(Q) Ankle–foot
(A) Arm (upper)
(B) Back–thoracolumbar spine
(C) Chest
(E) Elbow
(F) Face
(R) Forearm
(H) Head–skull
(U) Injured, unknown region
(K) Knee
(L) Leg (lower)
(Y) Lower limb(s) (whole or unknown part)
(N) Neck–cervical spine
(P) Pelvic–hip
(S) Shoulder
(T) Thigh
(X) Upper limb(s) (whole or unknown part)
(O) Whole body
(W) Wrist–hand

Aspect of Injury

(A) Anterior–front
(C) Central
(I) Inferior–lower
(U) Injured, unknown aspect
(L) Left
(P) Posterior–back
(R) Right
(S) Superior–upper
(W) Whole region

Lesion

(A) Abrasion
(M) Amputation
(V) Avulsion
(B) Burn
(K) Concussion
(C) Contusion
(N) Crush
(G) Detachment, separation
(D) Dislocation
(F) Fracture
(Z) Fracture and dislocation
(U) Injured, unknown lesion
(L) Laceration
(O) Other
(P) Perforation, puncture
(R) Rupture
(S) Sprain
(T) Strain
(E) Total severance, transection

System/Organ

(W) All systems in region
(A) Arteries–veins
(B) Brain
(D) Digestive
(E) Ears
(O) Eye
(H) Heart
(U) Injured, unknown system
(I) Integumentary
(J) Joints
(K) Kidneys
(L) Liver
(M) Muscles
(N) Nervous system
(P) Pulmonary–lungs
(R) Respiratory
(S) Skeletal
(C) Spinal cord
(Q) Spleen
(T) Thyroid, other endocrine gland
(G) Urogenital
(V) Vertebrae

Abbreviated Injury Scale

(1) Minor injury
(2) Moderate injury
(3) Serious injury
(4) Severe injury
(5) Critical injury
(6) Maximum (untreatable)
(7) Injured, unknown severity

OFFICIAL INJURY DATA – SKELETAL INJURIES

Indicate the *Location, Lesion, Detail* (size, depth, fracture type, head injury clinical signs and neurological deficits), and *Source* of all injuries indicated by official sources (or from PAR or other unofficial sources if medical records and interviewee data are unavailable.)

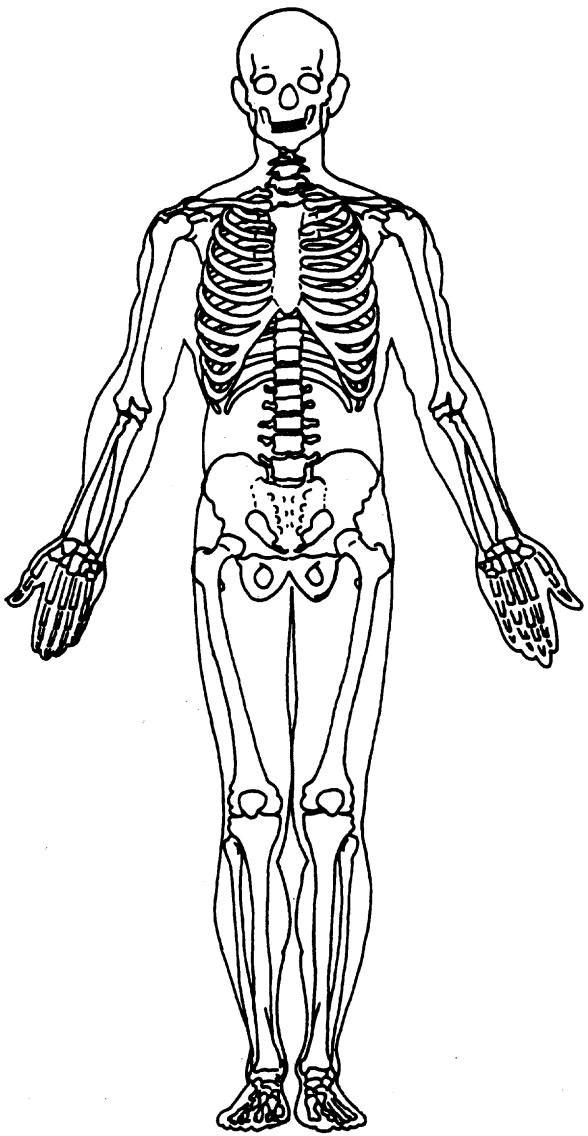

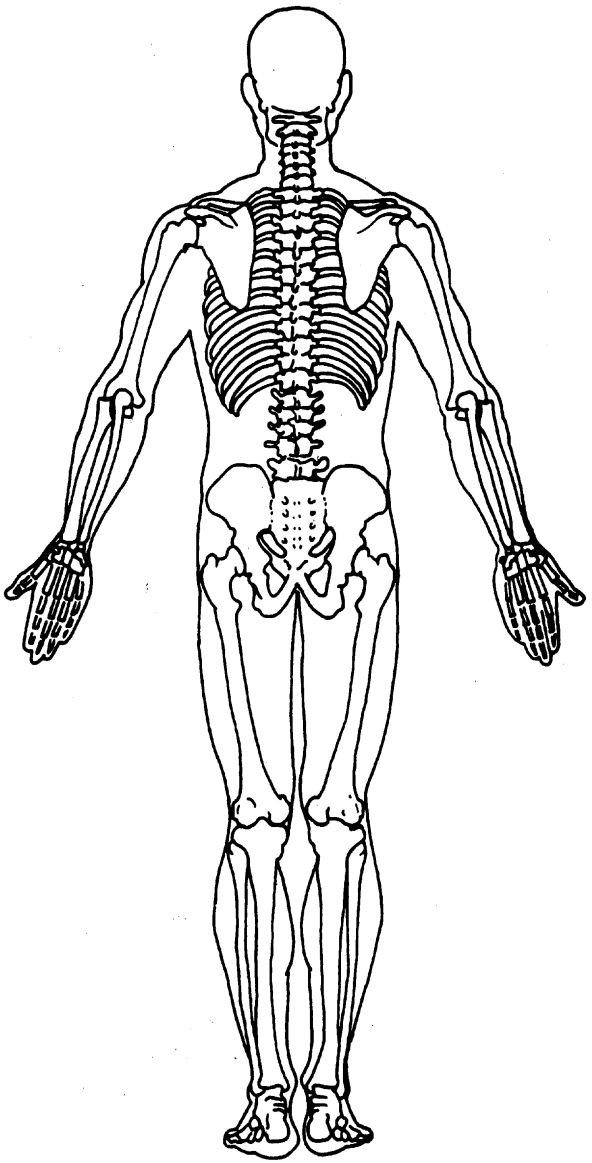

OFFICIAL INJURY DATA – INTERNAL INJURIES

Indicate the *Location, Lesion, Detail* (size, depth, fracture type, head injury clinical signs and neurological deficits), and *Source* of all injuries indicated by official sources (or from PAR or other unofficial sources if medical records and interviewee data are unavailable.)

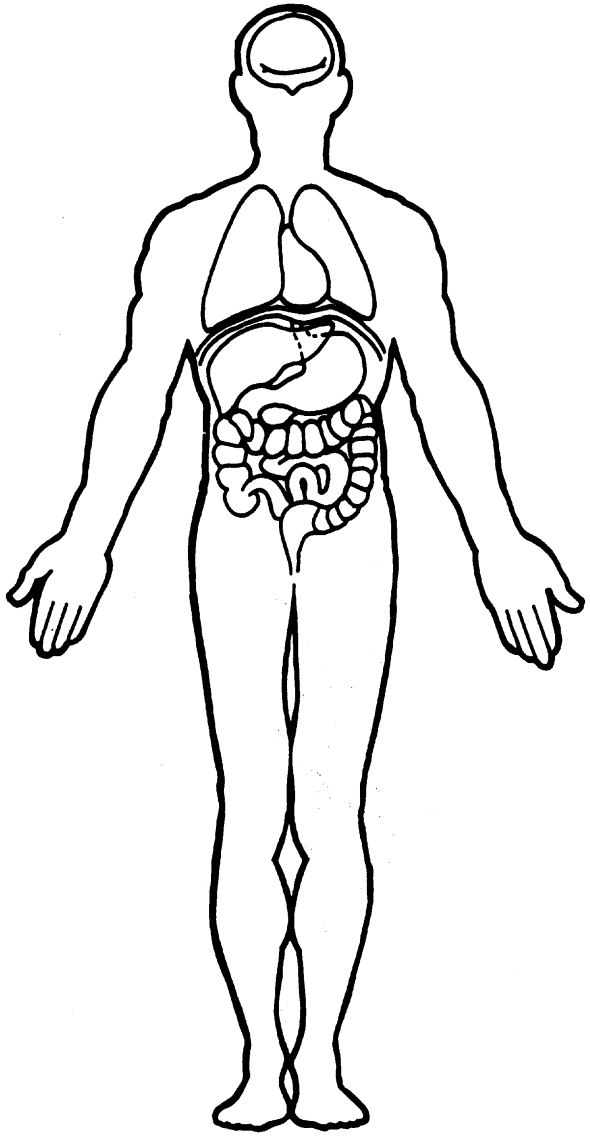

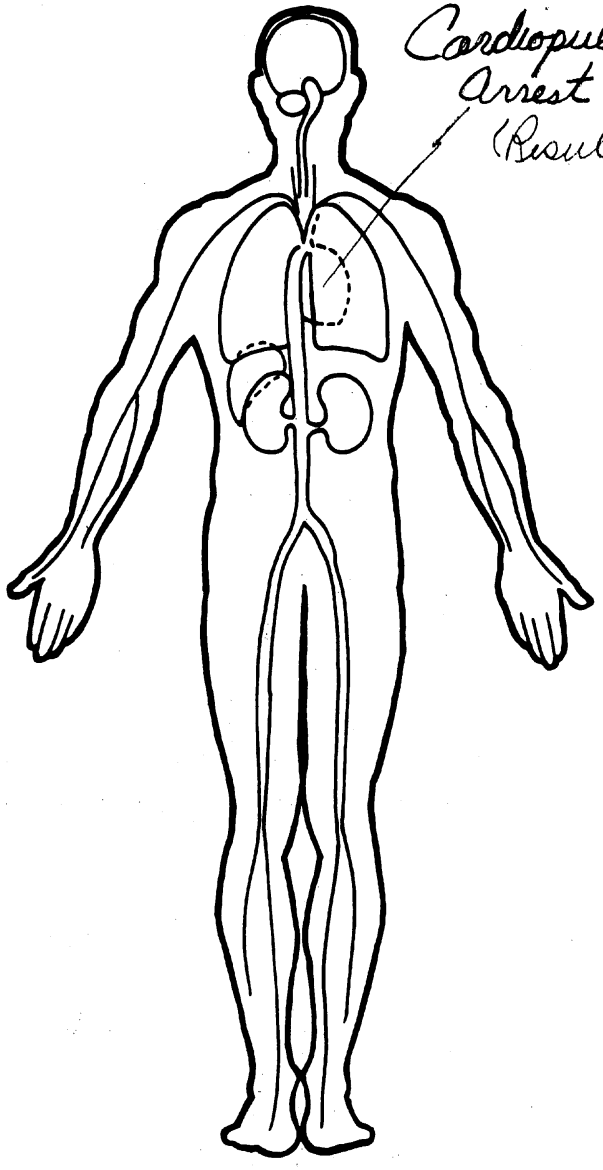

U.S. Department of Transportation

National Highway Traffic Safety Administration

OCCUPANT INJURY FORM

NATIONAL ACCIDENT SAMPLING SYSTEM
CRASHWORTHINESS DATA SYSTEM

1. Primary Sampling Unit Number 1 2
2. Case Number – Stratum 0 8 2 A
3. Vehicle Number 0 2
4. Occupant Number 0 2

INJURY DATA

Record below the actual injuries sustained by this occupant that were identified from the official and unofficial data sources. Remember not to double count an injury just because it was identified from two different sources. If greater than twenty injuries have been documented, encode the balance on the Occupant Injury Supplement.

	Source of Injury Data	O.I.C. – A.I.S. Body Region	Aspect	Lesion	System Organ	A.I.S. Severity	Injury Source	Injury Source Confidence Level	Direct/ Indirect Injury	Occupant Area Intrusion No.
1st	5. 7	6. F	7. I	8. E	9. S	10. 1	11. 8 4	12. 1	13. 1	14. 0 0
2nd	15. 7	16. L	17. L	18. L	19. I	20. 1	21. 1 0	22. 1	23. 1	24. 0 0
3rd	25.	26.	27.	28.	29.	30.	31.	32.	33.	34.
4th	35.	36.	37.	38.	39.	40.	41.	42.	43.	44.
5th	45.	46.	47.	48.	49.	50.	51.	52.	53.	54.
6th	55.	56.	57.	58.	59.	60.	61.	62.	63.	64.
7th	65.	66.	67.	68.	69.	70.	71.	72.	73.	74.
8th	75.	76.	77.	78.	79.	80.	81.	82.	83.	84.
9th	85.	86.	87.	88.	89.	90.	91.	92.	93.	94.
10th	95.	96.	97.	98.	99.	100.	101.	102.	103.	104.
11th	105.	106.	107.	108.	109.	110.	111.	112.	113.	114.
12th	115.	116.	117.	118.	119.	120.	121.	122.	123.	124.
13th	125.	126.	127.	128.	129.	130.	131.	132.	133.	134.
14th	135.	136.	137.	138.	139.	140.	141.	142.	143.	144.
15th	145.	146.	147.	148.	149.	150.	151.	152.	153.	154.
16th	155.	156.	157.	158.	159.	160.	161.	162.	163.	164.
17th	165.	166.	167.	168.	169.	170.	171.	172.	173.	174.
18th	175.	176.	177.	178.	179.	180.	181.	182.	183.	184.
19th	185.	186.	187.	188.	189.	190.	191.	192.	193.	194.
20th	195.	196.	197.	198.	199.	200.	201.	202.	203.	204.

HS Form 433B
8/1/87

OCCUPANT INJURY DATA SUPPLEMENT

	Source of Injury Data	O.I.C. – A.I.S. Body Region	Aspect	Lesion	System Organ	A.I.S. Severity	Injury Source	Injury Source Confidence Level	Direct/ Indirect Injury	Occupant Area Intrusion No.
21st	—	—	—	—	—	—	— —	—	—	— —
22nd	—	—	—	—	—	—	— —	—	—	— —
23rd	—	—	—	—	—	—	— —	—	—	— —
24th	—	—	—	—	—	—	— —	—	—	— —
25th	—	—	—	—	—	—	— —	—	—	— —
26th	—	—	—	—	—	—	— —	—	—	— —
27th	—	—	—	—	—	—	— —	—	—	— —
28th	—	—	—	—	—	—	— —	—	—	— —
29th	—	—	—	—	—	—	— —	—	—	— —
30th	—	—	—	—	—	—	— —	—	—	— —
31st	—	—	—	—	—	—	— —	—	—	— —
32nd	—	—	—	—	—	—	— —	—	—	— —
33rd	—	—	—	—	—	—	— —	—	—	— —
34th	—	—	—	—	—	—	— —	—	—	— —
35th	—	—	—	—	—	—	— —	—	—	— —
36th	—	—	—	—	—	—	— —	—	—	— —
37th	—	—	—	—	—	—	— —	—	—	— —
38th	—	—	—	—	—	—	— —	—	—	— —
39th	—	—	—	—	—	—	— —	—	—	— —
40th	—	—	—	—	—	—	— —	—	—	— —
41st	—	—	—	—	—	—	— —	—	—	— —
42nd	—	—	—	—	—	—	— —	—	—	— —
43rd	—	—	—	—	—	—	— —	—	—	— —
44th	—	—	—	—	—	—	— —	—	—	— —
45th	—	—	—	—	—	—	— —	—	—	— —

OFFICIAL INJURY DATA—SOFT TISSUE INJURIES

Indicate the *Location, Lesion, Detail* (size, depth, fracture type, head injury clinical signs and neurological deficits), and *Source* of all injuries indicated by official sources (or from PAR or other unofficial sources if medical records and interviewee data are unavailable.)

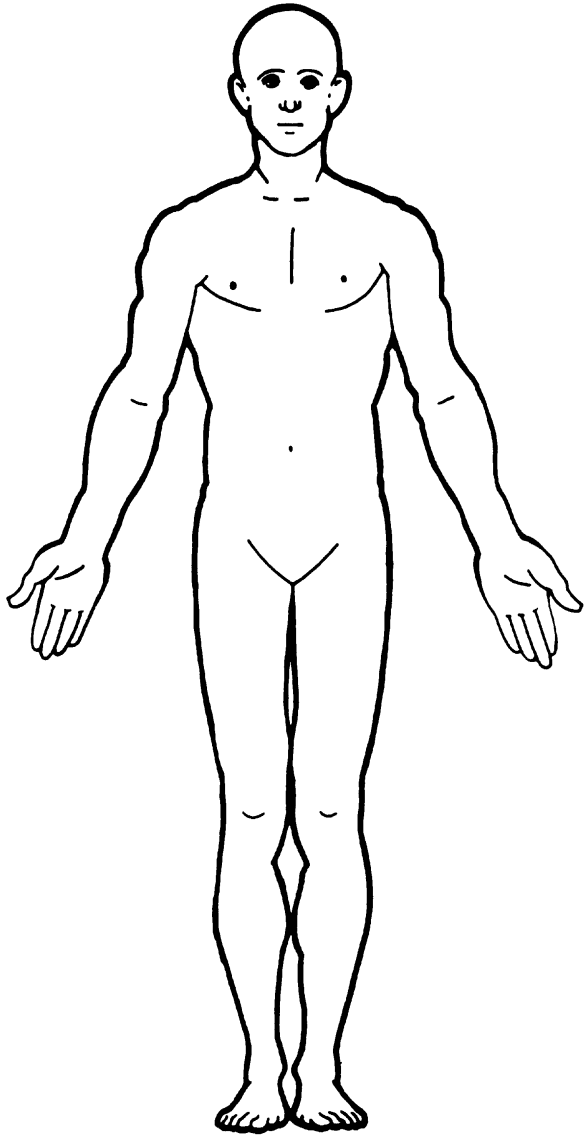

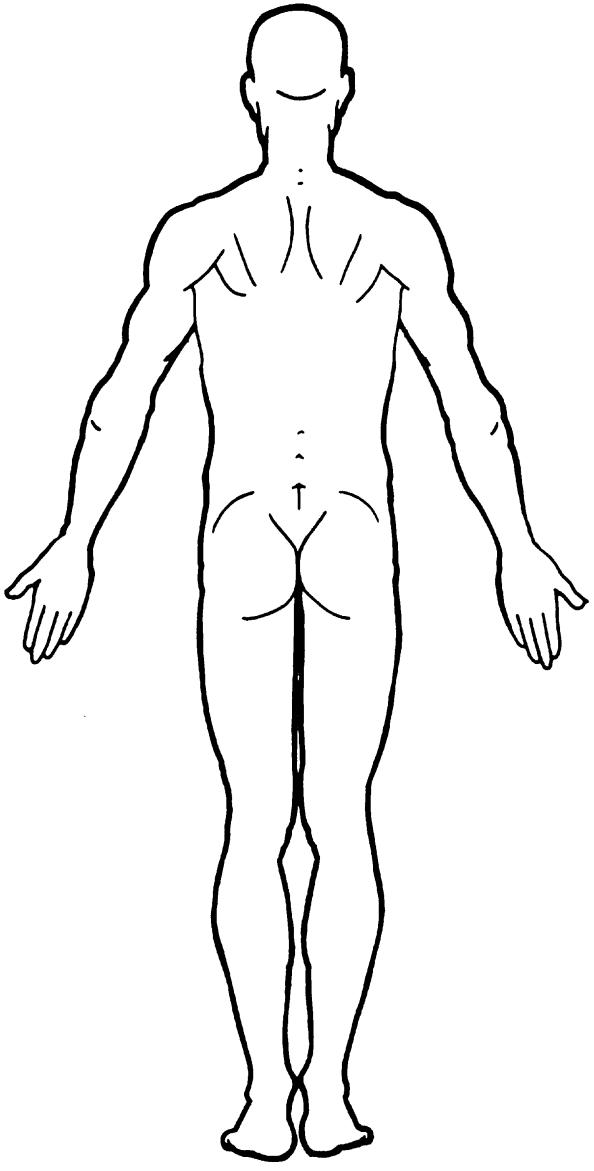

SOURCE OF INJURY DATA

OFFICIAL

(1) Autopsy records with or without hospital medical records
(2) Hospital medical records other than emergency room (eg. discharge summary)
(3) Emergency room records only (including associated X-rays or other lab reports)
(4) Private physician, walk-in or emergency clinic

UNOFFICIAL

(5) Lay coroner report
(6) E.M.S. personnel
(7) Interviewee
(8) Other source (specify): _____

(9) Police

INJURY SOURCE

FRONT

(01) Windshield
(02) Mirror
(03) Sunvisor
(04) Steering wheel rim
(05) Steering wheel hub/spoke
(06) Steering wheel (combination of codes 04 and 05)
(07) Steering column, transmission selector lever, other attachment
(08) Add-on equipment (e.g., CB, tape deck, air conditioner)
(09) Left instrument panel and below
(10) Center instrument panel and below
(11) Right instrument panel and below
(12) Glove compartment door
(13) Knee bolster
(14) Windshield including one or more of the following: front header, A-pillar, instrument panel, mirror, or steering assembly (driver side only)
(15) Windshield including one or more of the following: front header, A-pillar, instrument panel, mirror (passenger side only)
(16) Other front object (specify): _____

LEFT SIDE

(20) Left side interior surface, excluding hardware or armrests
(21) Left side hardware or armrest
(22) Left A pillar
(23) Left B pillar
(24) Other left pillar (specify): _____

(25) Left side window glass or frame
(26) Left side window glass including one or more of the following: frame, window sill, A-pillar, B-pillar, or roof side rail
(27) Other left side object (specify): _____

RIGHT SIDE

(30) Right side interior surface, excluding hardware or armrests
(31) Right side hardware or armrest
(32) Right A pillar
(33) Right B pillar
(34) Other right pillar (specify): _____

(35) Right side window glass or frame
(36) Right side window glass including one or more of the following: frame, window sill, A-pillar, B-pillar, roof side rail
(37) Other right side object (specify): _____

INTERIOR

(40) Seat, back support
(41) Belt restraint webbing/buckle
(42) Belt restraint B-pillar attachment point
(43) Other restraint system component (specify): _____

(44) Head restraint system
(45) Air cushion
(46) Other occupants (specify): _____

(47) Interior loose objects
(48) Child safety seat (specify): _____

(49) Other interior object (specify): _____

ROOF

(50) Front header
(51) Rear header
(52) Roof left side rail
(53) Roof right side rail
(54) Roof or convertible top

FLOOR

(56) Floor including toe pan
(57) Floor or console mounted transmission lever, including console
(58) Parking brake handle
(59) Foot controls including parking brake

REAR

(60) Backlight (rear window)
(61) Backlight storage rack, door, etc.
(62) Other rear object (specify): _____

EXTERIOR OF OCCUPANT'S VEHICLE

(65) Hood
(66) Outside hardware (e.g., outside mirror, antenna)
(67) Other exterior surface or tires (specify): _____

(68) Unknown exterior objects

EXTERIOR OF OTHER MOTOR VEHICLE

(70) Front bumper
(71) Hood edge
(72) Other front of vehicle (specify): _____

(73) Hood
(74) Hood ornament
(75) Windshield, roof rail, A-pillar
(76) Side surface
(77) Side mirrors
(78) Other side protrusions (specify): _____

(79) Rear surface
(80) Undercarriage
(81) Tires and wheels
(82) Other exterior of other motor vehicle (specify): _____

(83) Unknown exterior of other motor vehicle

OTHER VEHICLE OR OBJECT IN THE ENVIRONMENT

(84) Ground
(85) Other vehicle or object (specify) _____

(86) Unknown vehicle or object

NONCONTACT INJURY

(90) Fire in vehicle
(91) Flying glass
(92) Other noncontact injury source (specify) _____

(97) Injured, unknown source

INJURY SOURCE CONFIDENCE LEVEL

(1) Certain
(2) Probable
(3) Possible
(9) Unknown

DIRECT/INDIRECT INJURY

(1) Direct contact injury
(2) Indirect contact injury
(3) Noncontact injury
(7) Injured, unknown source

OCCUPANT INJURY CLASSIFICATION

O.I.C. Body Region

(M) Abdomen
(Q) Ankle–foot
(A) Arm (upper)
(B) Back–thoracolumbar spine
(C) Chest
(E) Elbow
(F) Face
(R) Forearm
(H) Head–skull
(U) Injured, unknown region
(K) Knee
(L) Leg (lower)
(Y) Lower limb(s) (whole or unknown part)
(N) Neck–cervical spine
(P) Pelvic–hip
(S) Shoulder
(T) Thigh
(X) Upper limb(s) (whole or unknown part)
(O) Whole body
(W) Wrist–hand

Aspect of Injury

(A) Anterior–front
(C) Central
(I) Inferior–lower
(U) Injured, unknown aspect
(L) Left
(P) Posterior–back
(R) Right
(S) Superior–upper
(W) Whole region

Lesion

(A) Abrasion
(M) Amputation
(V) Avulsion
(B) Burn
(K) Concussion
(C) Contusion
(N) Crush
(G) Detachment, separation
(D) Dislocation
(F) Fracture
(Z) Fracture and dislocation
(U) Injured, unknown lesion
(L) Laceration
(O) Other
(P) Perforation, puncture
(R) Rupture
(S) Sprain
(T) Strain
(E) Total severance, transection

System/Organ

(W) All systems in region
(A) Arteries–veins
(B) Brain
(D) Digestive
(E) Ears
(O) Eye
(H) Heart
(U) Injured, unknown system
(I) Integumentary
(J) Joints
(K) Kidneys
(L) Liver
(M) Muscles
(N) Nervous system
(P) Pulmonary–lungs
(R) Respiratory
(S) Skeletal
(C) Spinal cord
(Q) Spleen
(T) Thyroid, other endocrine gland
(G) Urogenital
(V) Vertebrae

Abbreviated Injury Scale

(1) Minor injury
(2) Moderate injury
(3) Serious injury
(4) Severe injury
(5) Critical injury
(6) Maximum (untreatable)
(7) Injured, unknown severity

OFFICIAL INJURY DATA—SKELETAL INJURIES

Indicate the *Location, Lesion, Detail* (size, depth, fracture type, head injury clinical signs and neurological deficits), and *Source* of all injuries indicated by official sources (or from PAR or other unofficial sources if medical records and interviewee data are unavailable.)

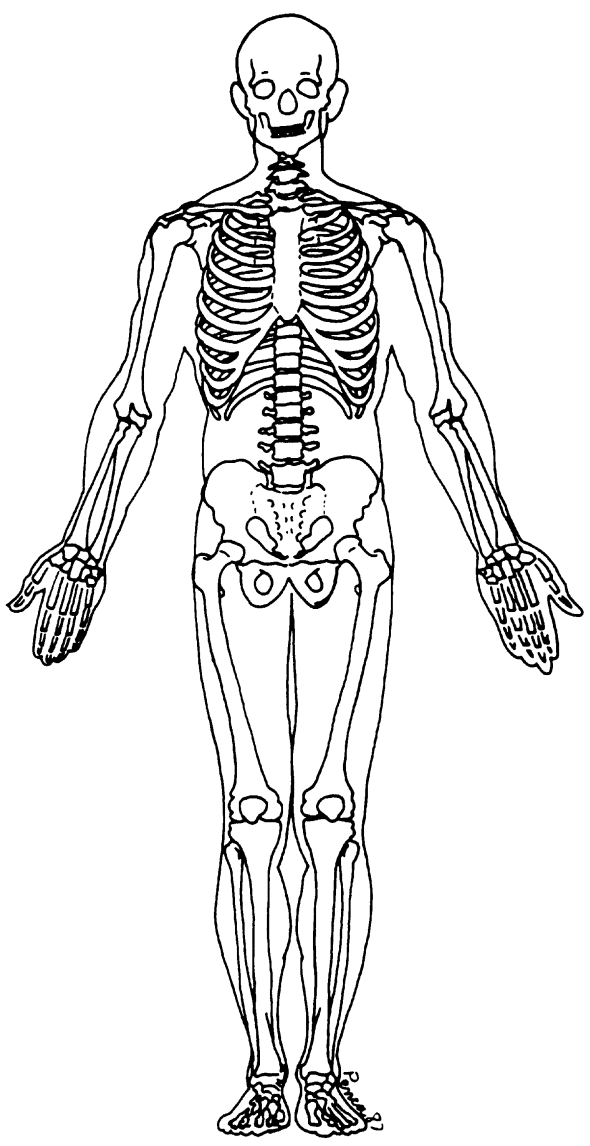

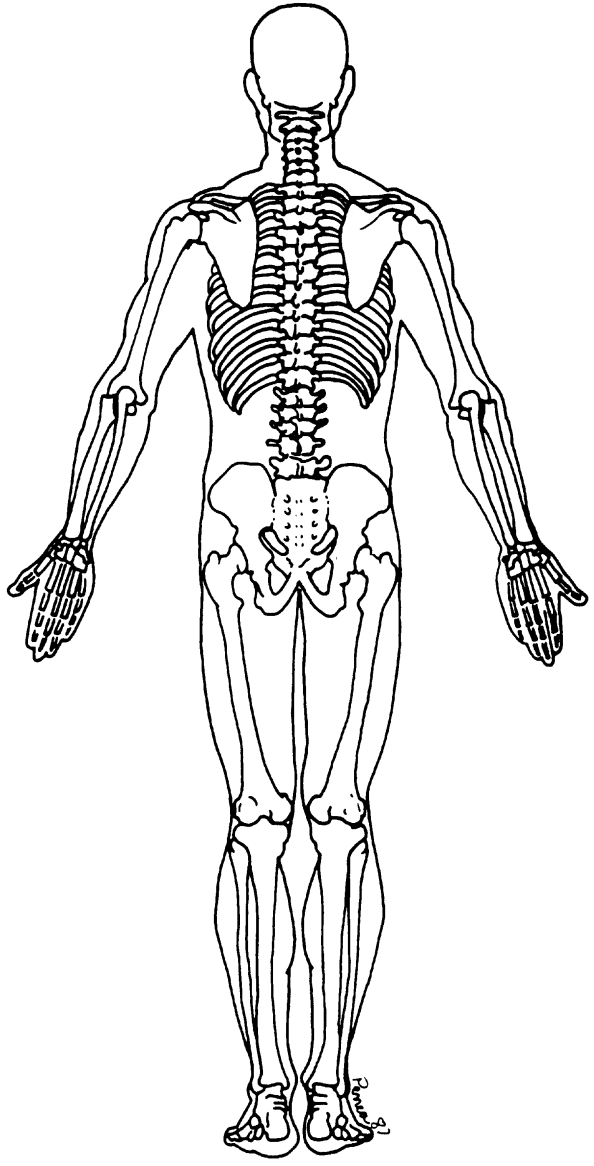

OFFICIAL INJURY DATA – INTERNAL INJURIES

Indicate the *Location, Lesion, Detail* (size, depth, fracture type, head injury clinical signs and neurological deficits), and *Source* of all injuries indicated by official sources (or from PAR or other unofficial sources if medical records and interviewee data are unavailable.)

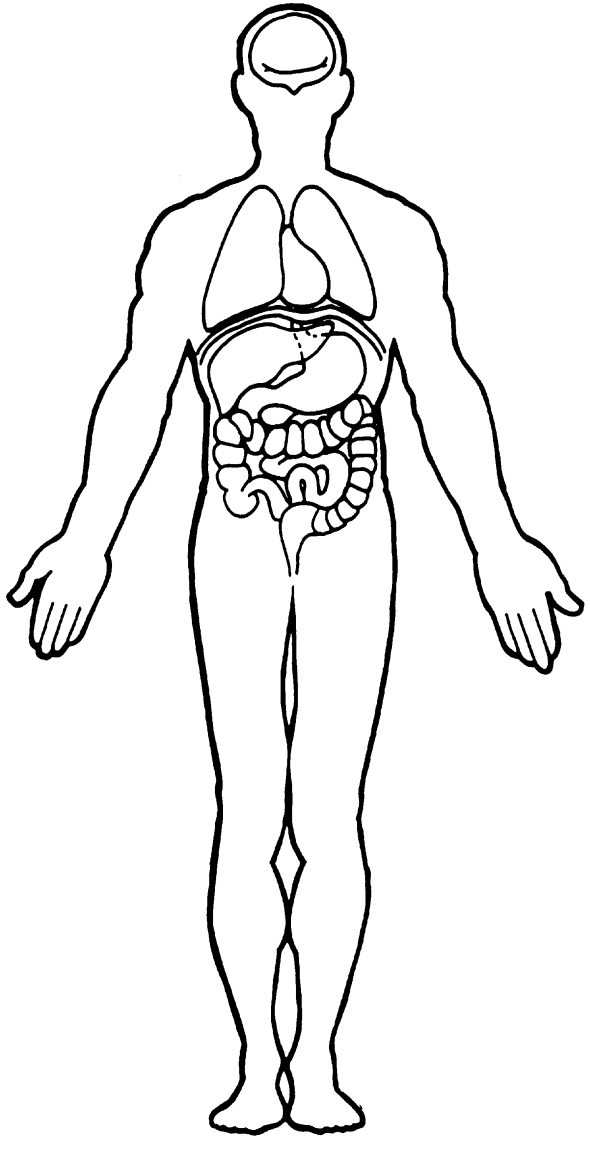

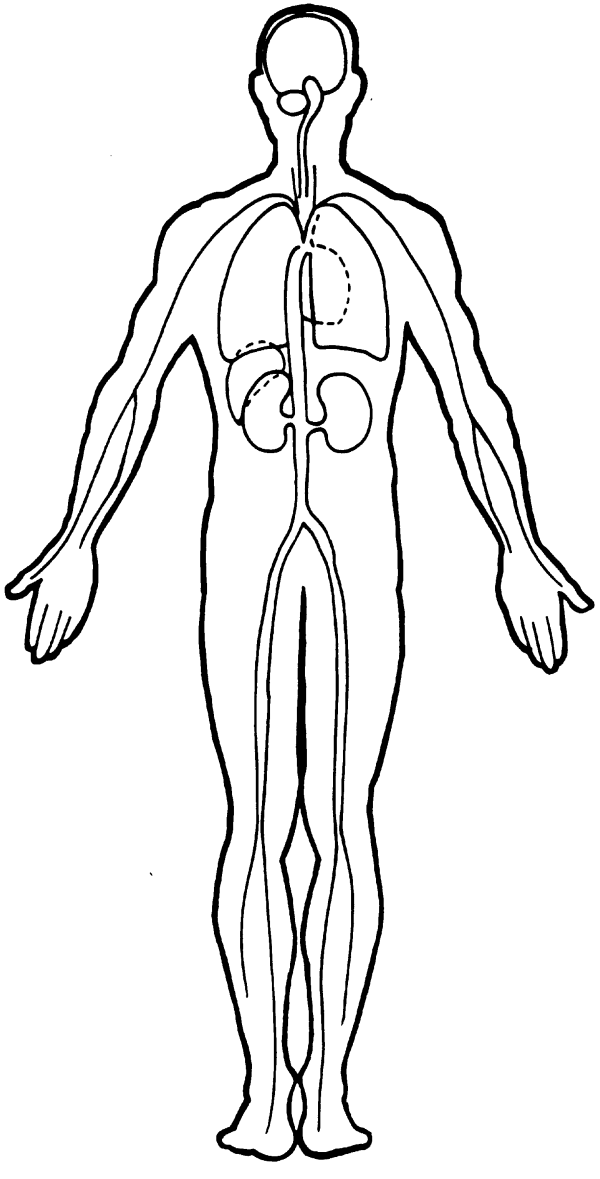

BEST AVAILABLE

U.S. Department of Transportation
National Highway Traffic Safety Administration

UPDATE FORM

NATIONAL ACCIDENT SAMPLING SYSTEM
CRASHWORTHINESS DATA SYSTEM

1. Primary Sampling Unit Number 1 2
2. Case Number – Stratum 0 8 2 4
3. Vehicle Number 0 2
4. Occupant Number 0 2

RECEIVED [redacted] 1988

Driver or Occupant Name: _____

Address: _____

Other Information: _____

(Sanitize this section prior to Update submission.)

INJURY DATA CODED ON INITIAL SUBMISSION

	Source of Injury Data	O.I.C. – A.I.S. Body Region	Aspect	Lesion	System Organ	A.I.S. Severity	Injury Source	Injury Source Confidence Level	Direct/ Indirect Injury	Occupant Area Intrusion No.
1st	5. 7	6. F	7. I	8. F	9. S	10. 1	11. 8 4	12. 1	13. 1	14. 0 0
2nd	15. 7	16. L	17. L	18. L	19. I	20. 1	21. 1 0	22. 1	23. 1	24. 0 0
3rd	25.	26.	27.	28.	29.	30.	31.	32.	33.	34.
4th	35.	36.	37.	38.	39.	40.	41.	42.	43.	44.
5th	45.	46.	47.	48.	49.	50.	51.	52.	53.	54.
6th	55.	56.	57.	58.	59.	60.	61.	62.	63.	64.
7th	65.	66.	67.	68.	69.	70.	71.	72.	73.	74.
8th	75.	76.	77.	78.	79.	80.	81.	82.	83.	84.
9th	85.	86.	87.	88.	89.	90.	91.	92.	93.	94.
10th	95.	96.	97.	98.	99.	100.	101.	102.	103.	104.

NOTE: If necessary, keep copy of original Occupant Injury form and submit as part of update.

UPDATED CASE INFORMATION

	INITIAL SUBMISSION	FINAL
GV12. Alcohol Test Results for Driver	9 6	9 6
OA05. Occupant's Age	4 9	4 9
OA06. Occupant's Sex	2	2
OA07. Occupant's Height	6 1	6 1
OA08. Occupant's Weight	1 4 7	1 4 7
OA17. Manual (Active) Belt System Availability	4	4
OA18. Manual (Active) Belt System Use	0 0	0 0
OA21. Automatic (Passive) Restraint System Availability	0	0
OA22. Automatic (Passive) Restraint Function	0	0

	INITIAL SUBMISSION	FINAL
OA35. Treatment – Mortality	3	3
OA36. Type of Medical Facility (for Initial Treatment)	1	1
OA37. Hospital Stay	0 5	0 7
OA38. Working Days Lost	6 1	6 1
OA39. Time to Death	0 6	0 0
OA40. 1st Medically Reported Cause of Death	0 0	0 0
OA41. 2nd Medically Reported Cause of Death	0 0	0 0
OA42. 3rd Medically Reported Cause of Death	0 0	0 0
OA43. Number of Recorded Injuries for This Occupant	0 2	0 8

HS Form 433C
1/88

BEST AVAILABLE

INJURY DATA

Record below the actual injuries sustained by this occupant that were identified from the unofficial and official sources prior to initial case submission **and from subsequently** acquired medical data. Remember not to double count an injury just because it was identified from two different sources.

	Source of Injury Data	O.I.C.—A.I.S. Body Region	Aspect	Lesion	System Organ	A.I.S. Severity	Injury Source	Injury Source Confidence Level	Direct/ Indirect Injury	Occupant Area Intrusion No.
1st	5. 2	6. C	7. L	8. F	9. S	10. 4	11. 97	12. 9	13. 7	14. 00
2nd	15. 2	16. C	17. R	18. F	19. S	20. 4	21. 97	22. 9	23. 7	24. 00
3rd	25. 2	26. S	27. R	28. F	29. S	30. 2	31. 97	32. 9	33. 7	34. 00
4th	35. 2	36. F	37. C	38. L	39. I	40. 1	41. 97	42. 9	43. 7	44. 00
5th	45. 2	46. H	47. L	48. L	49. E	50. 1	51. 97	52. 9	53. 7	54. 00
6th	55. 2	56. H	57. P	58. L	59. I	60. 1	61. 97	62. 9	63. 7	64. 00
7th	65. 7	66. E	67. I	68. E	69. S	70. 1	71. 84	72. 1	73. 1	74. 00
8th	75. 7	76. L	77. L	78. L	79. I	80. 1	81. 10	82. 1	83. 1	84. 00
9th	85.	86.	87.	88.	89.	90.	91.	92.	93.	94.
10th	95.	96.	97.	98.	99.	100.	101.	102.	103.	104.
11th	105.	106.	107.	108.	109.	110.	111.	112.	113.	114.
12th	115.	116.	117.	118.	119.	120.	121.	122.	123.	124.
13th	125.	126.	127.	128.	129.	130.	131.	132.	133.	134.
14th	135.	136.	137.	138.	139.	140.	141.	142.	143.	144.
15th	145.	146.	147.	148.	149.	150.	151.	152.	153.	154.
16th	155.	156.	157.	158.	159.	160.	161.	162.	163.	164.
17th	165.	166.	167.	168.	169.	170.	171.	172.	173.	174.
18th	175.	176.	177.	178.	179.	180.	181.	182.	183.	184.
19th	185.	186.	187.	188.	189.	190.	191.	192.	193.	194.
20th	195.	196.	197.	198.	199.	200.	201.	202.	203.	204.

If greater than 20 injuries, code additional on Occupant Injury Data Supplement.

BEST AVAILABLE

OCCUPANT INJURY DATA SUPPLEMENT

	Source of Injury Data	O.I.C. – A.I.S. Body Region	Aspect	Lesion	System Organ	A.I.S. Severity	Injury Source	Injury Source Confidence Level	Direct/ Indirect Injury	Occupant Area Intrusion No.
21st										
22nd										
23rd										
24th										
25th										
26th										
27th										
28th										
29th										
30th										
31st										
32nd										
33rd										
34th										
35th										
36th										
37th										
38th										
39th										
40th										
41st										
42nd										
43rd										
44th										
45th										

OFFICIAL INJURY DATA—SOFT TISSUE INJURIES

Indicate the *Location, Lesion, Detail* (size, depth, fracture type, head injury clinical signs and neurological deficits), and *Source* of all injuries indicated by official sources (or from PAR or other unofficial sources if medical records and interviewee data are unavailable.)

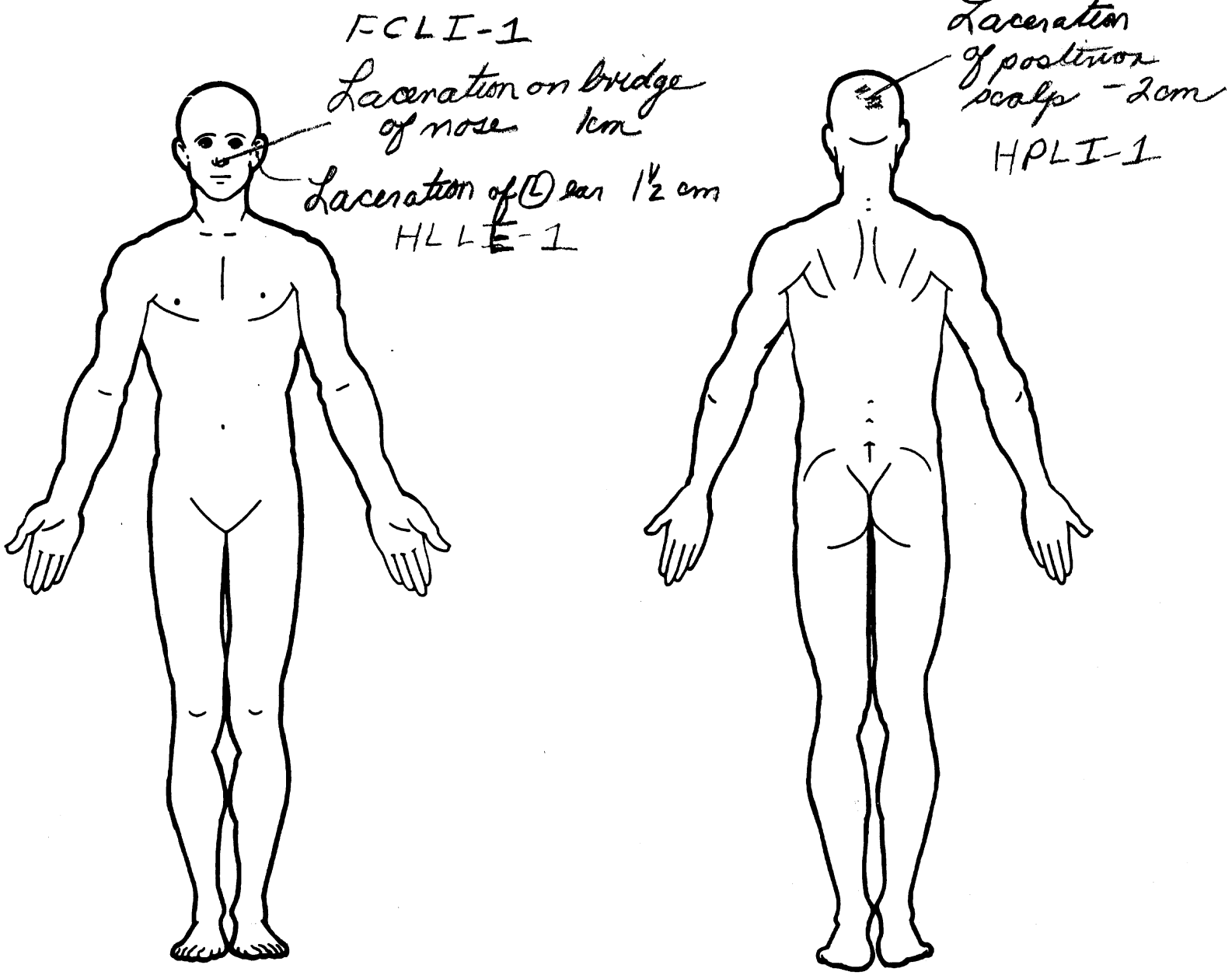

SOURCE OF INJURY DATA

OFFICIAL

(1) Autopsy records with or without hospital medical records
(2) Hospital medical records other than emergency room (eg. discharge summary)
(3) Emergency room records only (including associated X-rays or other lab reports)
(4) Private physician, walk-in or emergency clinic

UNOFFICIAL

(5) Lay coroner report
(6) E.M.S. personnel
(7) Interviewee
(8) Other source (specify): _____

(9) Police

INJURY SOURCE

FRONT

(01) Windshield
(02) Mirror
(03) Sunvisor
(04) Steering wheel rim
(05) Steering wheel hub/spoke
(06) Steering wheel (combination of codes 04 and 05)
(07) Steering column, transmission selector lever, other attachment
(08) Add-on equipment (e.g., CB, tape deck, air conditioner)
(09) Left instrument panel and below
(10) Center instrument panel and below
(11) Right instrument panel and below
(12) Glove compartment door
(13) Knee bolster
(14) Windshield including one or more of the following: front header, A-pillar, instrument panel, mirror, or steering assembly (driver side only)
(15) Windshield including one or more of the following: front header, A-pillar, instrument panel, or mirror (passenger side only)
(16) Other front object (specify): _____

LEFT SIDE

(20) Left side interior surface, excluding hardware or armrests
(21) Left side hardware or armrest
(22) Left A pillar
(23) Left B pillar
(24) Other left pillar (specify): _____

(25) Left side window glass or frame
(26) Left side window glass including one or more of the following: frame, window sill, A-pillar, B-pillar, or roof side rail
(27) Other left side object (specify): _____

RIGHT SIDE

(30) Right side interior surface, excluding hardware or armrests
(31) Right side hardware or armrest
(32) Right A pillar
(33) Right B pillar
(34) Other right pillar (specify): _____

(35) Right side window glass or frame
(36) Right side window glass including one or more of the following: frame, window sill, A-pillar, B-pillar, roof side rail
(37) Other right side object (specify): _____

INTERIOR

(40) Seat, back support
(41) Belt restraint webbing/buckle
(42) Belt restraint B-pillar attachment point
(43) Other restraint system component (specify): _____

(44) Head restraint system
(45) Air cushion
(46) Other occupants (specify): _____

(47) Interior loose objects
(48) Child safety seat (specify): _____

(49) Other interior object (specify): _____

ROOF

(50) Front header
(51) Rear header
(52) Roof left side rail
(53) Roof right side rail
(54) Roof or convertible top

FLOOR

(56) Floor including toe pan
(57) Floor or console mounted transmission lever, including console
(58) Parking brake handle
(59) Foot controls including parking brake

REAR

(60) Backlight (rear window)
(61) Backlight storage rack, door, etc.
(62) Other rear object (specify): _____

EXTERIOR OF OCCUPANT'S VEHICLE

(65) Hood
(66) Outside hardware (e.g., outside mirror, antenna)
(67) Other exterior surface or tires (specify): _____

(68) Unknown exterior objects

EXTERIOR OF OTHER MOTOR VEHICLE

(70) Front bumper
(71) Hood edge
(72) Other front of vehicle (specify): _____

(73) Hood
(74) Hood ornament
(75) Windshield, roof rail, A-pillar
(76) Side surface
(77) Side mirrors
(78) Other side protrusions (specify): _____

(79) Rear surface
(80) Undercarriage
(81) Tires and wheels
(82) Other exterior of other motor vehicle (specify): _____

(83) Unknown exterior of other motor vehicle

OTHER VEHICLE OR OBJECT IN THE ENVIRONMENT

(84) Ground
(85) Other vehicle or object (specify) _____

(86) Unknown vehicle or object

NONCONTACT INJURY

(90) Fire in vehicle
(91) Flying glass
(92) Other noncontact injury source (specify) _____

(97) Injured, unknown source

INJURY SOURCE CONFIDENCE LEVEL

(1) Certain
(2) Probable
(3) Possible
(9) Unknown

DIRECT/INDIRECT INJURY

(1) Direct contact injury
(2) Indirect contact injury
(3) Noncontact injury
(7) Injured, unknown source

OCCUPANT INJURY CLASSIFICATION

O.I.C. Body Region

(M) Abdomen
(Q) Ankle–foot
(A) Arm (upper)
(B) Back–thoracolumbar spine
(C) Chest
(E) Elbow
(F) Face
(R) Forearm
(H) Head–skull
(U) Injured, unknown region
(K) Knee
(L) Leg (lower)
(Y) Lower limb(s) (whole or unknown part)
(N) Neck–cervical spine
(P) Pelvic–hip
(S) Shoulder
(T) Thigh
(X) Upper limb(s) (whole or unknown part)
(O) Whole body
(W) Wrist–hand

Aspect of Injury

(A) Anterior–front
(C) Central
(I) Inferior–lower
(U) Injured, unknown aspect
(L) Left
(P) Posterior–back
(R) Right
(S) Superior–upper
(W) Whole region

Lesion

(A) Abrasion
(M) Amputation
(V) Avulsion
(B) Burn
(K) Concussion
(C) Contusion
(N) Crush
(G) Detachment, separation
(D) Dislocation
(F) Fracture
(Z) Fracture and dislocation
(U) Injured, unknown lesion
(L) Laceration
(O) Other
(P) Perforation, puncture
(R) Rupture
(S) Sprain
(T) Strain
(E) Total severance, transection

System/Organ

(W) All systems in region
(A) Arteries–veins
(B) Brain
(D) Digestive
(E) Ears
(O) Eye
(H) Heart
(U) Injured, unknown system
(I) Integumentary
(J) Joints
(K) Kidneys
(L) Liver
(M) Muscles
(N) Nervous system
(P) Pulmonary–lungs
(R) Respiratory
(S) Skeletal
(C) Spinal cord
(Q) Spleen
(T) Thyroid, other endocrine gland
(G) Urogenital
(V) Vertebrae

Abbreviated Injury Scale

(1) Minor injury
(2) Moderate injury
(3) Serious injury
(4) Severe injury
(5) Critical injury
(6) Maximum (untreatable)
(7) Injured, unknown severity

OFFICIAL INJURY DATA – SKELETAL INJURIES

Indicate the *Location, Lesion, Detail* (size, depth, fracture type, head injury clinical signs and neurological deficits), and *Source* of all injuries indicated by official sources (or from PAR or other unofficial sources if medical records and interviewee data are unavailable.)

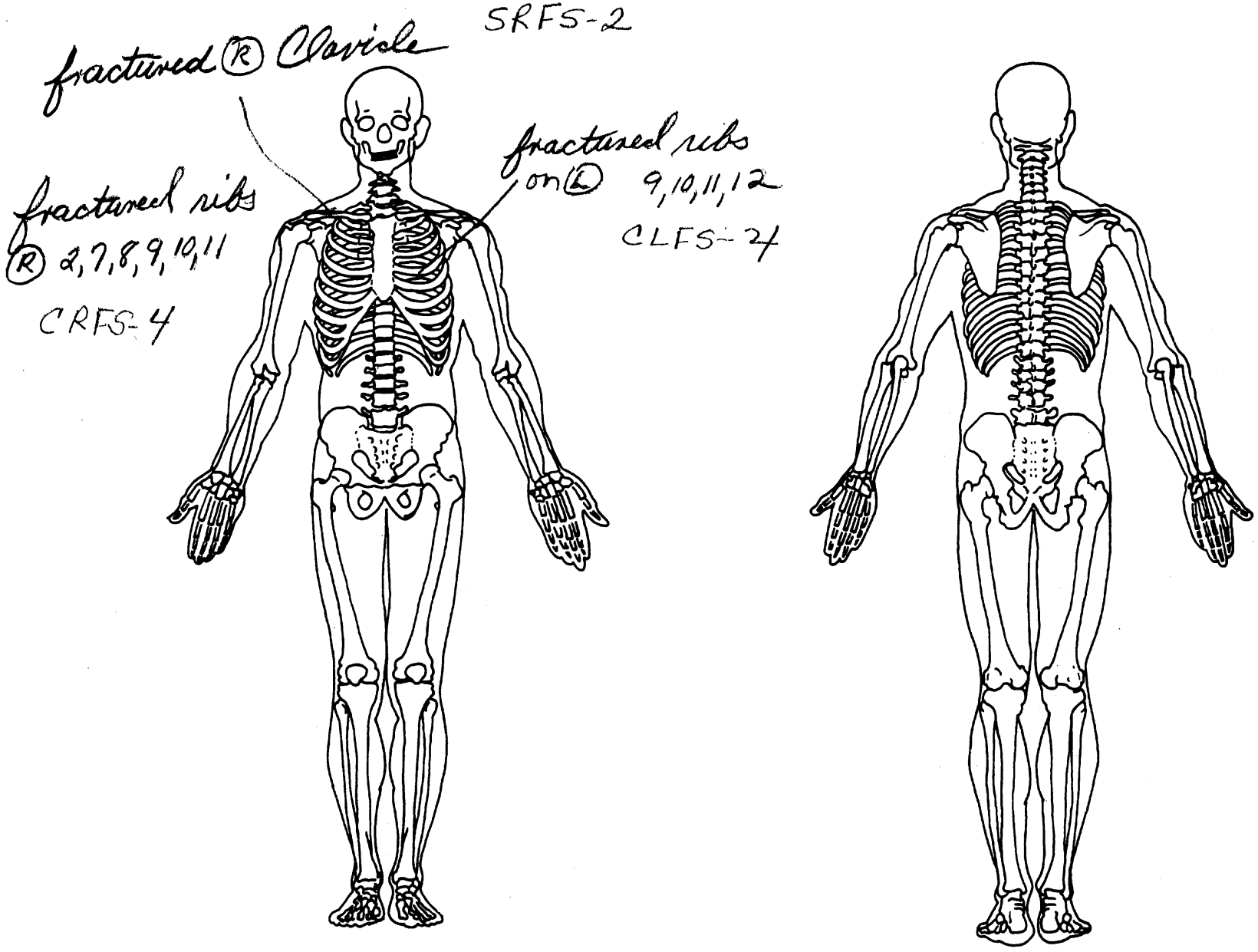

OFFICIAL INJURY DATA – INTERNAL INJURIES

Indicate the *Location, Lesion, Detail* (size, depth, fracture type, head injury clinical signs and neurological deficits), and *Source* of all injuries indicated by official sources (or from PAR or other unofficial sources if medical records and interviewee data are unavailable.)

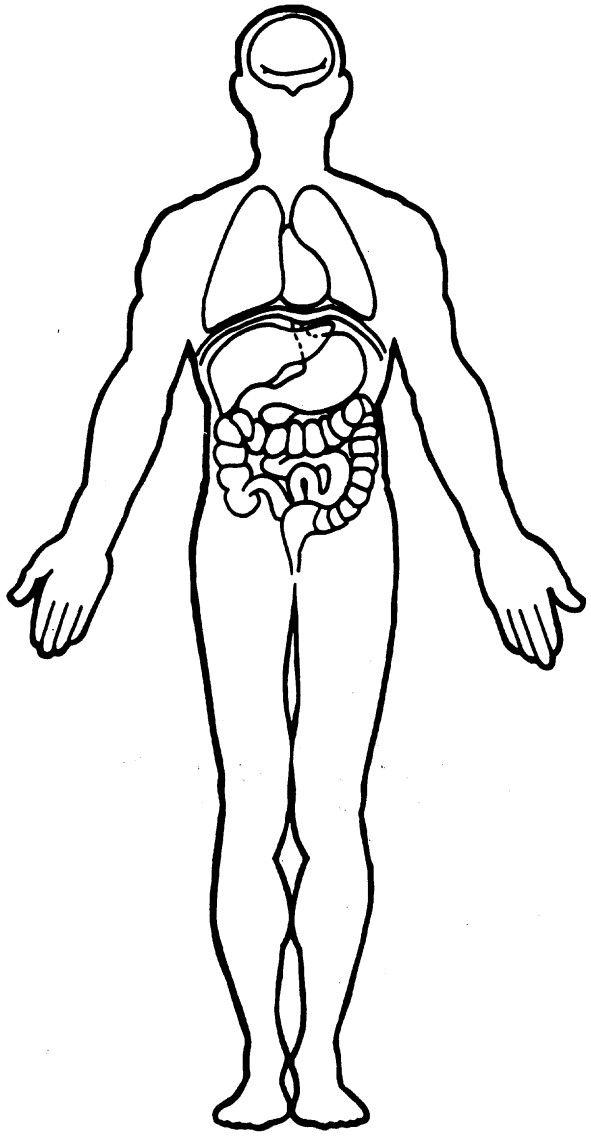

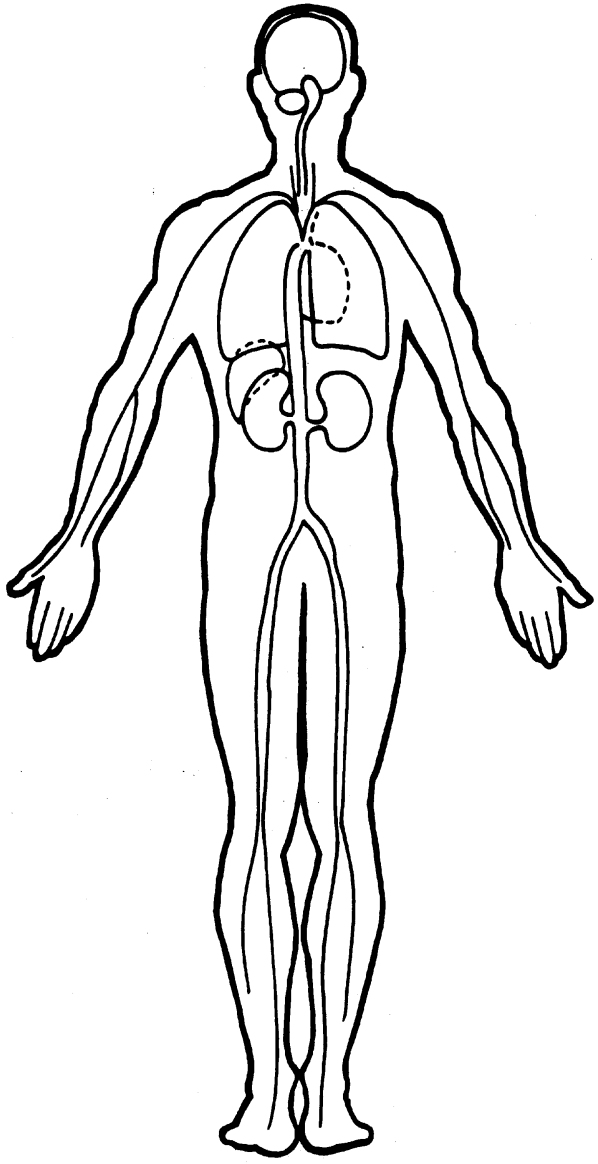

U.S. Department of Transportation
National Highway Traffic Safety Administration

OCCUPANT INJURY FORM

NATIONAL ACCIDENT SAMPLING SYSTEM
CRASHWORTHINESS DATA SYSTEM

1. Primary Sampling Unit Number 1 2
2. Case Number – Stratum 0 8 2 A
3. Vehicle Number 0 2
4. Occupant Number 0 3

INJURY DATA

Record below the actual injuries sustained by this occupant that were identified from the official and unofficial data sources. Remember not to double count an injury just because it was identified from two different sources. If greater than twenty injuries have been documented, encode the balance on the Occupant Injury Supplement.

	Source of Injury Data	O.I.C. – A.I.S. Body Region	Aspect	Lesion	System Organ	A.I.S. Severity	Injury Source	Injury Source Confidence Level	Direct/ Indirect Injury	Occupant Area Intrusion No.
1st	5. 7	6. S	7. L	8. F	9. S	10. 2	11. 9 7	12. 9	13. 7	14. 0 0
2nd	15. 7	16. C	17. B	18. F	19. S	20. 3	21. 9 7	22. 9	23. 7	24. 0 0
3rd	25. 7	26. E	27. W	28. L	29. I	30. 1	31. 9 7	32. 9	33. 7	34. 0 0
4th	35.	36.	37.	38.	39.	40.	41.	42.	43.	44.
5th	45.	46.	47.	48.	49.	50.	51.	52.	53.	54.
6th	55.	56.	57.	58.	59.	60.	61.	62.	63.	64.
7th	65.	66.	67.	68.	69.	70.	71.	72.	73.	74.
8th	75.	76.	77.	78.	79.	80.	81.	82.	83.	84.
9th	85.	86.	87.	88.	89.	90.	91.	92.	93.	94.
10th	95.	96.	97.	98.	99.	100.	101.	102.	103.	104.
11th	105.	106.	107.	108.	109.	110.	111.	112.	113.	114.
12th	115.	116.	117.	118.	119.	120.	121.	122.	123.	124.
13th	125.	126.	127.	128.	129.	130.	131.	132.	133.	134.
14th	135.	136.	137.	138.	139.	140.	141.	142.	143.	144.
15th	145.	146.	147.	148.	149.	150.	151.	152.	153.	154.
16th	155.	156.	157.	158.	159.	160.	161.	162.	163.	164.
17th	165.	166.	167.	168.	169.	170.	171.	172.	173.	174.
18th	175.	176.	177.	178.	179.	180.	181.	182.	183.	184.
19th	185.	186.	187.	188.	189.	190.	191.	192.	193.	194.
20th	195.	196.	197.	198.	199.	200.	201.	202.	203.	204.

OCCUPANT INJURY DATA SUPPLEMENT

	Source of Injury Data	O.I.C.–A.I.S. Body Region	Aspect	Lesion	System Organ	A.I.S. Severity	Injury Source	Injury Source Confidence Level	Direct/ Indirect Injury	Occupant Area Intrusion No.
21st	—	—	—	—	—	—	— —	—	—	— —
22nd	—	—	—	—	—	—	— —	—	—	— —
23rd	—	—	—	—	—	—	— —	—	—	— —
24th	—	—	—	—	—	—	— —	—	—	— —
25th	—	—	—	—	—	—	— —	—	—	— —
26th	—	—	—	—	—	—	— —	—	—	— —
27th	—	—	—	—	—	—	— —	—	—	— —
28th	—	—	—	—	—	—	— —	—	—	— —
29th	—	—	—	—	—	—	— —	—	—	— —
30th	—	—	—	—	—	—	— —	—	—	— —
31st	—	—	—	—	—	—	— —	—	—	— —
32nd	—	—	—	—	—	—	— —	—	—	— —
33rd	—	—	—	—	—	—	— —	—	—	— —
34th	—	—	—	—	—	—	— —	—	—	— —
35th	—	—	—	—	—	—	— —	—	—	— —
36th	—	—	—	—	—	—	— —	—	—	— —
37th	—	—	—	—	—	—	— —	—	—	— —
38th	—	—	—	—	—	—	— —	—	—	— —
39th	—	—	—	—	—	—	— —	—	—	— —
40th	—	—	—	—	—	—	— —	—	—	— —
41st	—	—	—	—	—	—	— —	—	—	— —
42nd	—	—	—	—	—	—	— —	—	—	— —
43rd	—	—	—	—	—	—	— —	—	—	— —
44th	—	—	—	—	—	—	— —	—	—	— —
45th	—	—	—	—	—	—	— —	—	—	— —

OFFICIAL INJURY DATA—SOFT TISSUE INJURIES

Indicate the *Location, Lesion, Detail* (size, depth, fracture type, head injury clinical signs and neurological deficits), and *Source* of all injuries indicated by official sources (or from PAR or other unofficial sources if medical records and interviewee data are unavailable.)

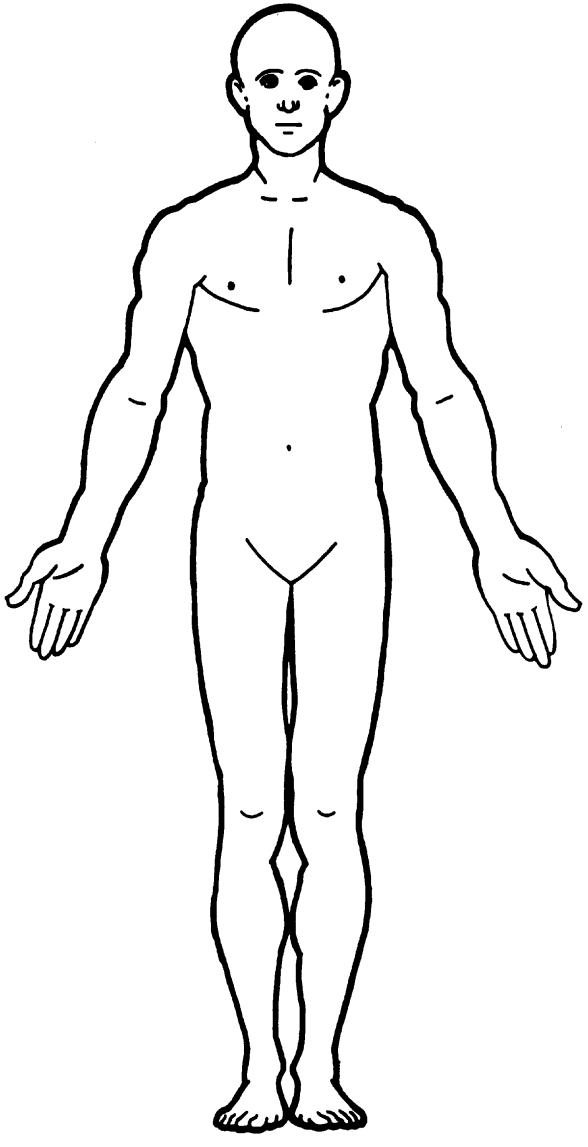

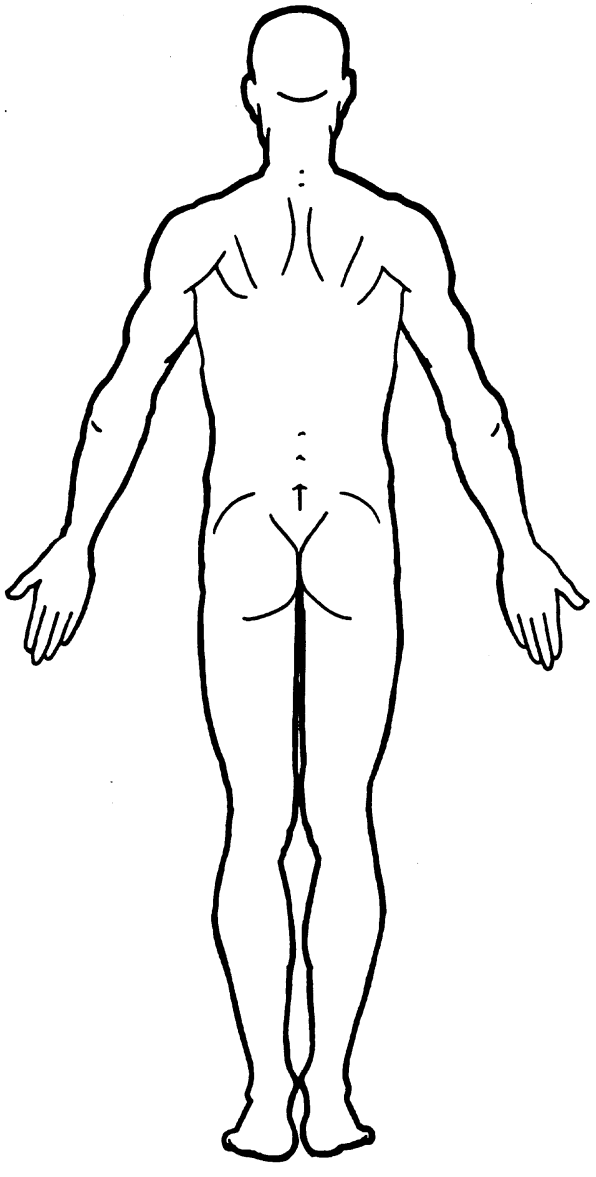

SOURCE OF INJURY DATA

OFFICIAL

(1) Autopsy records with or without hospital medical records
(2) Hospital medical records other than emergency room (eg. discharge summary)
(3) Emergency room records only (including associated X-rays or other lab reports)
(4) Private physician, walk-in or emergency clinic

UNOFFICIAL

(5) Lay coroner report
(6) E.M.S. personnel
(7) Interviewee
(8) Other source (specify): _____
(9) Police

INJURY SOURCE

FRONT

(01) Windshield
(02) Mirror
(03) Sunvisor
(04) Steering wheel rim
(05) Steering wheel hub/spoke
(06) Steering wheel (combination of codes 04 and 05)
(07) Steering column, transmission selector lever, other attachment
(08) Add-on equipment (e.g., CB, tape deck, air conditioner)
(09) Left instrument panel and below
(10) Center instrument panel and below
(11) Right instrument panel and below
(12) Glove compartment door
(13) Knee bolster
(14) Windshield including one or more of the following: front header, A-pillar, instrument panel, mirror, or steering assembly (driver side only)
(15) Windshield including one or more of the following: front header, A-pillar, instrument panel, mirror (passenger side only)
(16) Other front object (specify): _____

LEFT SIDE

(20) Left side interior surface, excluding hardware or armrests
(21) Left side hardware or armrest
(22) Left A pillar
(23) Left B pillar
(24) Other left pillar (specify): _____
(25) Left side window glass or frame
(26) Left side window glass including one or more of the following: frame, window sill, A-pillar, B-pillar, or roof side rail
(27) Other left side object (specify): _____

RIGHT SIDE

(30) Right side interior surface, excluding hardware or armrests
(31) Right side hardware or armrest
(32) Right A pillar
(33) Right B pillar
(34) Other right pillar (specify): _____
(35) Right side window glass or frame
(36) Right side window glass including one or more of the following: frame, window sill, A-pillar, B-pillar, roof side rail
(37) Other right side object (specify): _____

INTERIOR

(40) Seat, back support
(41) Belt restraint webbing/buckle
(42) Belt restraint B-pillar attachment point
(43) Other restraint system component (specify): _____
(44) Head restraint system
(45) Air cushion
(46) Other occupants (specify): _____
(47) Interior loose objects
(48) Child safety seat (specify): _____
(49) Other interior object (specify): _____

ROOF

(50) Front header
(51) Rear header
(52) Roof left side rail
(53) Roof right side rail
(54) Roof or convertible top

FLOOR

(56) Floor including toe pan
(57) Floor or console mounted transmission lever, including console
(58) Parking brake handle
(59) Foot controls including parking brake

REAR

(60) Backlight (rear window)
(61) Backlight storage rack, door, etc.
(62) Other rear object (specify): _____

EXTERIOR OF OCCUPANT'S VEHICLE

(65) Hood
(66) Outside hardware (e.g., outside mirror, antenna)
(67) Other exterior surface or tires (specify): _____
(68) Unknown exterior objects

EXTERIOR OF OTHER MOTOR VEHICLE

(70) Front bumper
(71) Hood edge
(72) Other front of vehicle (specify): _____
(73) Hood
(74) Hood ornament
(75) Windshield, roof rail, A-pillar
(76) Side surface
(77) Side mirrors
(78) Other side protrusions (specify): _____
(79) Rear surface
(80) Undercarriage
(81) Tires and wheels
(82) Other exterior of other motor vehicle (specify): _____
(83) Unknown exterior of other motor vehicle

OTHER VEHICLE OR OBJECT IN THE ENVIRONMENT

(84) Ground
(85) Other vehicle or object (specify) _____
(86) Unknown vehicle or object

NONCONTACT INJURY

(90) Fire in vehicle
(91) Flying glass
(92) Other noncontact injury source (specify) _____
(97) Injured, unknown source

INJURY SOURCE CONFIDENCE LEVEL

(1) Certain
(2) Probable
(3) Possible
(9) Unknown

DIRECT/INDIRECT INJURY

(1) Direct contact injury
(2) Indirect contact injury
(3) Noncontact injury
(7) Injured, unknown source

OCCUPANT INJURY CLASSIFICATION

O.I.C. Body Region

(M) Abdomen
(Q) Ankle–foot
(A) Arm (upper)
(B) Back–thoracolumbar spine
(C) Chest
(E) Elbow
(F) Face
(R) Forearm
(H) Head–skull
(U) Injured, unknown region
(K) Knee
(L) Leg (lower)
(Y) Lower limb(s) (whole or unknown part)
(N) Neck–cervical spine
(P) Pelvic–hip
(S) Shoulder
(T) Thigh
(X) Upper limb(s) (whole or unknown part)
(O) Whole body
(W) Wrist–hand

Aspect of Injury

(A) Anterior–front
(C) Central
(I) Inferior–lower
(U) Injured, unknown aspect
(L) Left
(P) Posterior–back
(R) Right
(S) Superior–upper
(W) Whole region

Lesion

(A) Abrasion
(M) Amputation
(V) Avulsion
(B) Burn
(K) Concussion
(C) Contusion
(N) Crush
(G) Detachment, separation
(D) Dislocation
(F) Fracture
(Z) Fracture and dislocation
(U) Injured, unknown lesion
(L) Laceration
(O) Other
(P) Perforation, puncture
(R) Rupture
(S) Sprain
(T) Strain
(E) Total severance, transection

System/Organ

(W) All systems in region
(A) Arteries–veins
(B) Brain
(D) Digestive
(E) Ears
(O) Eye
(H) Heart
(U) Injured, unknown system
(I) Integumentary
(J) Joints
(K) Kidneys
(L) Liver
(M) Muscles
(N) Nervous system
(P) Pulmonary–lungs
(R) Respiratory
(S) Skeletal
(C) Spinal cord
(Q) Spleen
(T) Thyroid, other endocrine gland
(G) Urogenital
(V) Vertebrae

Abbreviated Injury Scale

(1) Minor injury
(2) Moderate injury
(3) Serious injury
(4) Severe injury
(5) Critical injury
(6) Maximum (untreatable)
(7) Injured, unknown severity

OFFICIAL INJURY DATA—SKELETAL INJURIES

Indicate the *Location, Lesion, Detail* (size, depth, fracture type, head injury clinical signs and neurological deficits), and *Source* of all injuries indicated by official sources (or from PAR or other unofficial sources if medical records and interviewee data are unavailable.)

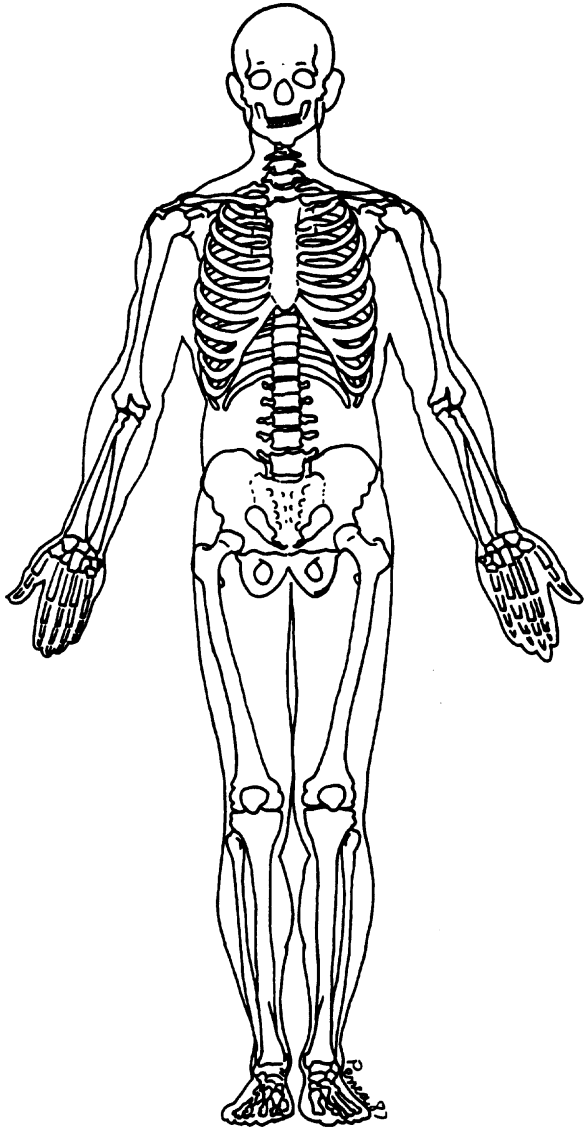

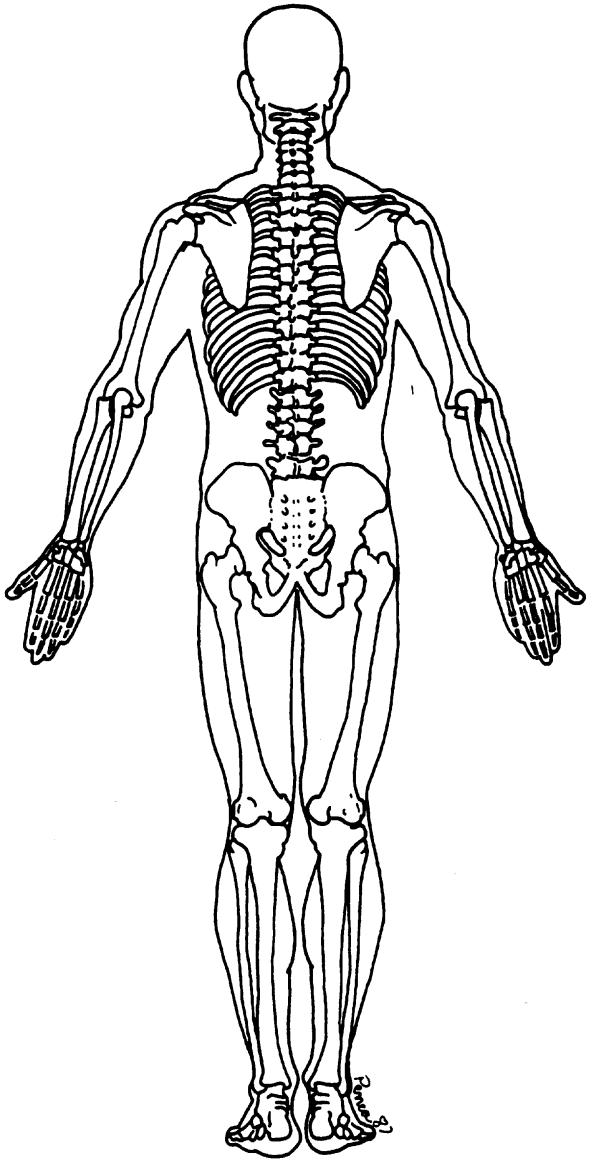

OFFICIAL INJURY DATA – INTERNAL INJURIES

Indicate the *Location, Lesion, Detail* (size, depth, fracture type, head injury clinical signs and neurological deficits), and *Source* of all injuries indicated by official sources (or from PAR or other unofficial sources if medical records and interviewee data are unavailable.)

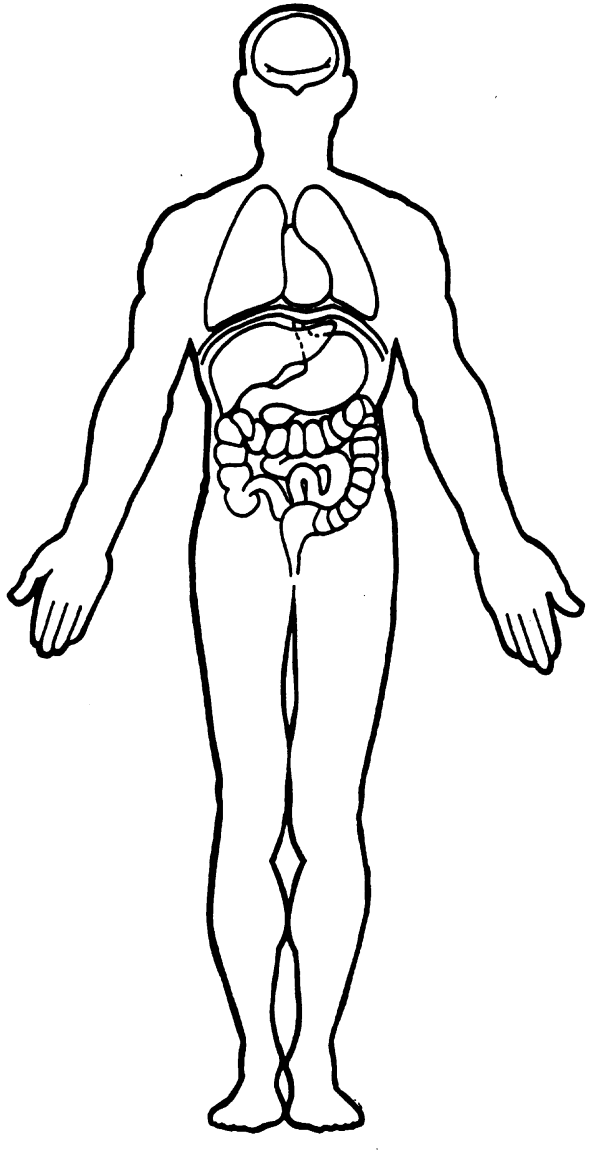

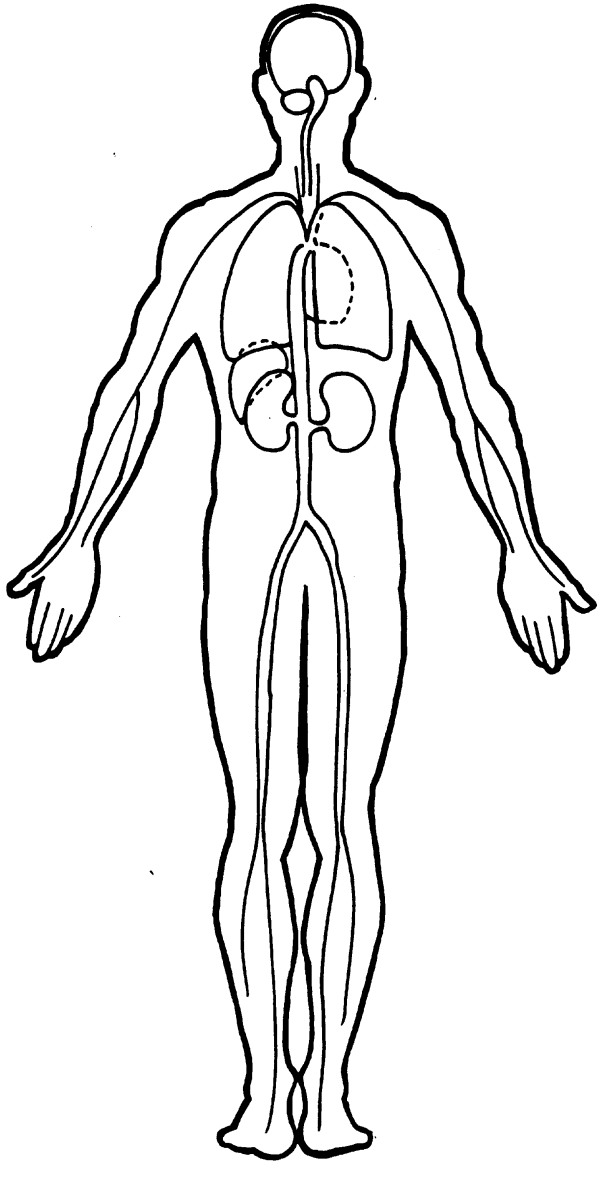

U.S. Department of Transportation
National Highway Traffic Safety Administration

UPDATE FORM

NATIONAL ACCIDENT SAMPLING SYSTEM
CRASHWORTHINESS DATA SYSTEM

1. Primary Sampling Unit Number 1 2
2. Case Number – Stratum 0 8 2 A
3. Vehicle Number 0 2
4. Occupant Number 0 3

RECEIVED [redacted] 1988

Driver or Occupant Name _____

Address: _____

Other Information: _____

(Sanitize this section prior to Update submission.)

INJURY DATA CODED ON INITIAL SUBMISSION

	Source of Injury Data	O.I.C.–A.I.S. Body Region	Aspect	Lesion	System Organ	A.I.S. Severity	Injury Source	Injury Source Confidence Level	Direct/ Indirect Injury	Occupant Area Intrusion No.
1st	5. 7	6. S	7. L	8. F	9. S	10. 2	11. 9 7	12. 9	13. 7	14. 0 0
2nd	15. 7	16. C	17. B	18. F	19. S	20. 3	21. 9 7	22. 9	23. 7	24. 0 0
3rd	25. 7	26. F	27. W	28. L	29. I	30. 1	31. 9 7	32. 9	33. 7	34. 0 0
4th	35.	36.	37.	38.	39.	40.	41.	42.	43.	44.
5th	45.	46.	47.	48.	49.	50.	51.	52.	53.	54.
6th	55.	56.	57.	58.	59.	60.	61.	62.	63.	64.
7th	65.	66.	67.	68.	69.	70.	71.	72.	73.	74.
8th	75.	76.	77.	78.	79.	80.	81.	82.	83.	84.
9th	85.	86.	87.	88.	89.	90.	91.	92.	93.	94.
10th	95.	96.	97.	98.	99.	100.	101.	102.	103.	104.

NOTE: If necessary, keep copy of original Occupant Injury form and submit as part of update.

UPDATED CASE INFORMATION

	INITIAL SUBMISSION	FINAL
GV12. Alcohol Test Results for Driver	9 6	9 6
OA05. Occupant's Age	4 0	4 0
OA06. Occupant's Sex	2	2
OA07. Occupant's Height	6 5	6 5
OA08. Occupant's Weight	1 7 0	1 7 0
OA17. Manual (Active) Belt System Availability	3	3
OA18. Manual (Active) Belt System Use	0 0	0 0
OA21. Automatic (Passive) Restraint System Availability	0	0
OA22. Automatic (Passive) Restraint Function	0	0

	INITIAL SUBMISSION	FINAL
OA35. Treatment – Mortality	3	3
OA36. Type of Medical Facility (for Initial Treatment)	1	1
OA37. Hospital Stay	0 7	0 5
OA38. Working Days Lost	6 1	6 1
OA39. Time to Death	0 0	0 0
OA40. 1st Medically Reported Cause of Death	0 0	0 0
OA41. 2nd Medically Reported Cause of Death	0 0	0 0
OA42. 3rd Medically Reported Cause of Death	0 0	0 0
OA43. Number of Recorded Injuries for This Occupant	0 3	0 7

BEST AVAILABLE

INJURY DATA

Record below the actual injuries sustained by this occupant that were identified from the unofficial and official sources prior to initial case submission **and from subsequently** acquired medical data. Remember not to double count an injury just because it was identified from two different sources.

	Source of Injury Data	O.I.C. – A.I.S. Body Region	Aspect	Lesion	System Organ	A.I.S. Severity	Injury Source	Injury Source Confidence Level	Direct/ Indirect Injury	Occupant Area Intrusion No.
1st	5. 2	6. H	7. W	8. K	9. B	10. 2	11. 97	12. 9	13. 7	14. 00
2nd	15. 2	16. F	17. S	18. C	19. I	20. 1	21. 97	22. 9	23. 7	24. 00
3rd	25. 2	26. F	27. I	28. F	29. S	30. 3	31. 97	32. 9	33. 7	34. 00
4th	35. 2	36. F	37. I	38. L	39. I	40. 1	41. 97	42. 9	43. 7	44. 00
5th	45. 2	46. F	47. W	48. L	49. I	50. 1	51. 97	52. 9	53. 7	54. 00
6th	55. 2	56. H	57. U	58. L	59. I	60. 1	61. 97	62. 9	63. 7	64. 00
7th	65. 2	66. L	67. R	68. A	69. I	70. 1	71. 92	72. 9	73. 7	74. 00
8th	75.	76.	77.	78.	79.	80.	81.	82.	83.	84.
9th	85.	86.	87.	88.	89.	90.	91.	92.	93.	94.
10th	95.	96.	97.	98.	99.	100.	101.	102.	103.	104.
11th	105.	106.	107.	108.	109.	110.	111.	112.	113.	114.
12th	115.	116.	117.	118.	119.	120.	121.	122.	123.	124.
13th	125.	126.	127.	128.	129.	130.	131.	132.	133.	134.
14th	135.	136.	137.	138.	139.	140.	141.	142.	143.	144.
15th	145.	146.	147.	148.	149.	150.	151.	152.	153.	154.
16th	155.	156.	157.	158.	159.	160.	161.	162.	163.	164.
17th	165.	166.	167.	168.	169.	170.	171.	172.	173.	174.
18th	175.	176.	177.	178.	179.	180.	181.	182.	183.	184.
19th	185.	186.	187.	188.	189.	190.	191.	192.	193.	194.
20th	195.	196.	197.	198.	199.	200.	201.	202.	203.	204.

If greater than 20 injuries, code additional on Occupant Injury Data Supplement.

OCCUPANT INJURY DATA SUPPLEMENT

	Source of Injury Data	O.I.C. – A.I.S. Body Region	Aspect	Lesion	System Organ	A.I.S. Severity	Injury Source	Injury Source Confidence Level	Direct/ Indirect Injury	Occupant Area Intrusion No.
21st	—	—	—	—	—	—	— —	—	—	— —
22nd	—	—	—	—	—	—	— —	—	—	— —
23rd	—	—	—	—	—	—	— —	—	—	— —
24th	—	—	—	—	—	—	— —	—	—	— —
25th	—	—	—	—	—	—	— —	—	—	— —
26th	—	—	—	—	—	—	— —	—	—	— —
27th	—	—	—	—	—	—	— —	—	—	— —
28th	—	—	—	—	—	—	— —	—	—	— —
29th	—	—	—	—	—	—	— —	—	—	— —
30th	—	—	—	—	—	—	— —	—	—	— —
31st	—	—	—	—	—	—	— —	—	—	— —
32nd	—	—	—	—	—	—	— —	—	—	— —
33rd	—	—	—	—	—	—	— —	—	—	— —
34th	—	—	—	—	—	—	— —	—	—	— —
35th	—	—	—	—	—	—	— —	—	—	— —
36th	—	—	—	—	—	—	— —	—	—	— —
37th	—	—	—	—	—	—	— —	—	—	— —
38th	—	—	—	—	—	—	— —	—	—	— —
39th	—	—	—	—	—	—	— —	—	—	— —
40th	—	—	—	—	—	—	— —	—	—	— —
41st	—	—	—	—	—	—	— —	—	—	— —
42nd	—	—	—	—	—	—	— —	—	—	— —
43rd	—	—	—	—	—	—	— —	—	—	— —
44th	—	—	—	—	—	—	— —	—	—	— —
45th	—	—	—	—	—	—	— —	—	—	— —

BEST AVAILABLE

OFFICIAL INJURY DATA—SOFT TISSUE INJURIES

Indicate the *Location, Lesion, Detail* (size, depth, fracture type, head injury clinical signs and neurological deficits), and *Source* of all injuries indicated by official sources (or from PAR or other unofficial sources if medical records and interviewee data are unavailable.)

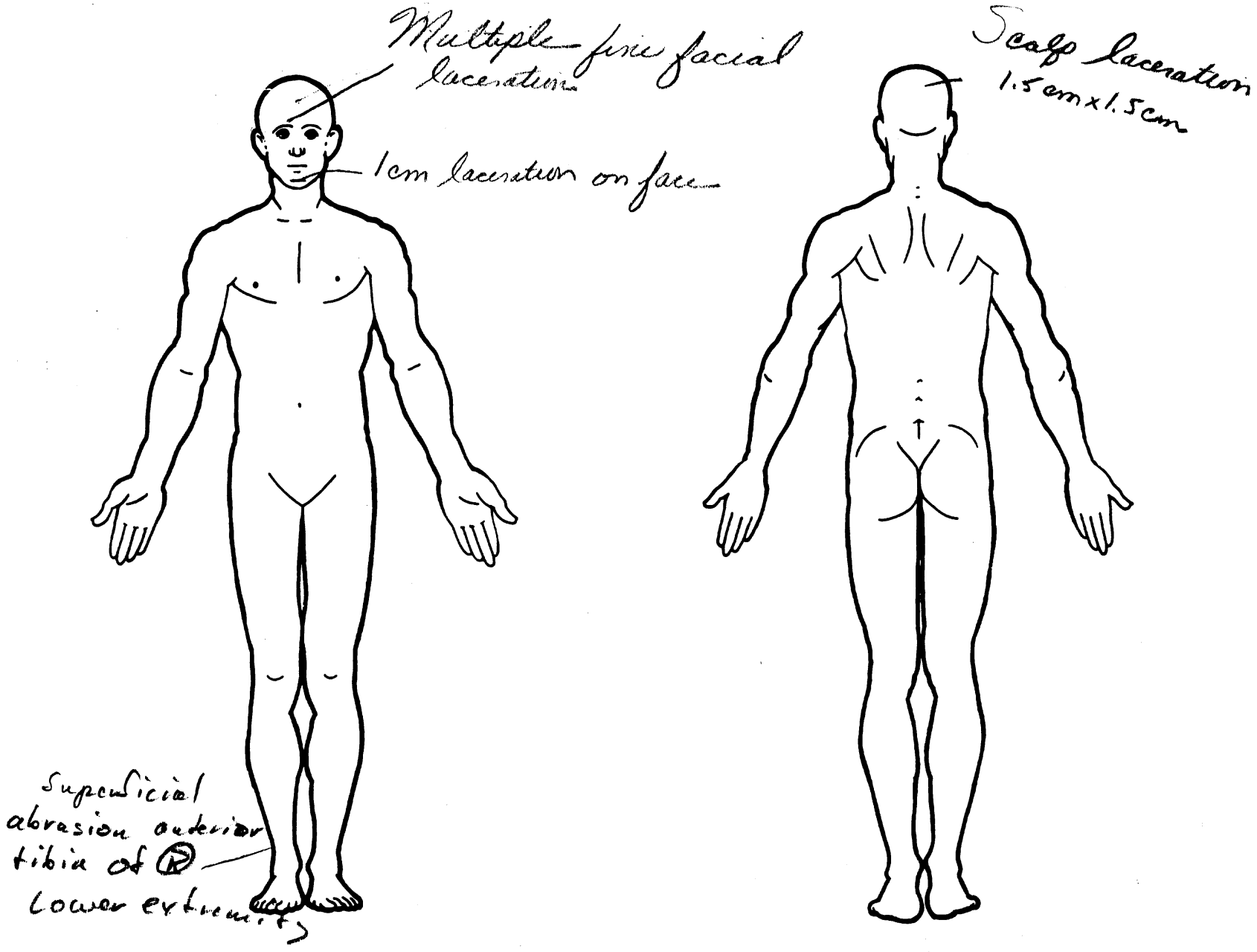

SOURCE OF INJURY DATA

OFFICIAL

(1) Autopsy records with or without hospital medical records
(2) Hospital medical records other than emergency room (eg. discharge summary)
(3) Emergency room records only (including associated X-rays or other lab reports)
(4) Private physician, walk-in or emergency clinic

UNOFFICIAL

(5) Lay coroner report
(6) E.M.S. personnel
(7) Interviewee
(8) Other source (specify):

(9) Police

INJURY SOURCE

FRONT

(01) Windshield
(02) Mirror
(03) Sunvisor
(04) Steering wheel rim
(05) Steering wheel hub/spoke
(06) Steering wheel (combination of codes 04 and 05)
(07) Steering column, transmission selector lever, other attachment
(08) Add-on equipment (e.g., CB, tape deck, air conditioner)
(09) Left instrument panel and below
(10) Center instrument panel and below
(11) Right instrument panel and below
(12) Glove compartment door
(13) Knee bolster
(14) Windshield including one or more of the following: front header, A-pillar, instrument panel, mirror, or steering assembly (driver side only)
(15) Windshield including one or more of the following: front header, A-pillar, instrument panel, or mirror (passenger side only)
(16) Other front object (specify):

LEFT SIDE

(20) Left side interior surface, excluding hardware or armrests
(21) Left side hardware or armrest
(22) Left A pillar
(23) Left B pillar
(24) Other left pillar (specify):

(25) Left side window glass or frame
(26) Left side window glass including one or more of the following: frame, window sill, A-pillar, B-pillar, or roof side rail
(27) Other left side object (specify):

RIGHT SIDE

(30) Right side interior surface, excluding hardware or armrests
(31) Right side hardware or armrest
(32) Right A pillar
(33) Right B pillar
(34) Other right pillar (specify):

(35) Right side window glass or frame
(36) Right side window glass including one or more of the following: frame, window sill, A-pillar, B-pillar, roof side rail
(37) Other right side object (specify):

INTERIOR

(40) Seat, back support
(41) Belt restraint webbing/buckle
(42) Belt restraint B-pillar attachment point
(43) Other restraint system component (specify):

(44) Head restraint system
(45) Air cushion
(46) Other occupants (specify):

(47) Interior loose objects
(48) Child safety seat (specify):

(49) Other interior object (specify):

ROOF

(50) Front header
(51) Rear header
(52) Roof left side rail
(53) Roof right side rail
(54) Roof or convertible top

FLOOR

(56) Floor including toe pan
(57) Floor or console mounted transmission lever, including console
(58) Parking brake handle
(59) Foot controls including parking brake

REAR

(60) Backlight (rear window)
(61) Backlight storage rack, door, etc.
(62) Other rear object (specify):

EXTERIOR OF OCCUPANT'S VEHICLE

(65) Hood
(66) Outside hardware (e.g., outside mirror, antenna)
(67) Other exterior surface or tires (specify):

(68) Unknown exterior objects

EXTERIOR OF OTHER MOTOR VEHICLE

(70) Front bumper
(71) Hood edge
(72) Other front of vehicle (specify):

(73) Hood
(74) Hood ornament
(75) Windshield, roof rail, A-pillar
(76) Side surface
(77) Side mirrors
(78) Other side protrusions (specify):

(79) Rear surface
(80) Undercarriage
(81) Tires and wheels
(82) Other exterior of other motor vehicle (specify):

(83) Unknown exterior of other motor vehicle

OTHER VEHICLE OR OBJECT IN THE ENVIRONMENT

(84) Ground
(85) Other vehicle or object (specify)

(86) Unknown vehicle or object

NONCONTACT INJURY

(90) Fire in vehicle
(91) Flying glass
(92) Other noncontact injury source (specify)

(97) Injured, unknown source

INJURY SOURCE CONFIDENCE LEVEL

(1) Certain
(2) Probable
(3) Possible
(9) Unknown

DIRECT/INDIRECT INJURY

(1) Direct contact injury
(2) Indirect contact injury
(3) Noncontact injury
(7) Injured, unknown source

OCCUPANT INJURY CLASSIFICATION

O.I.C. Body Region

(M) Abdomen
(Q) Ankle–foot
(A) Arm (upper)
(B) Back–thoracolumbar spine
(C) Chest
(E) Elbow
(F) Face
(R) Forearm
(H) Head–skull
(U) Injured, unknown region
(K) Knee
(L) Leg (lower)
(Y) Lower limb(s) (whole or unknown part)
(N) Neck–cervical spine
(P) Pelvic–hip
(S) Shoulder
(T) Thigh
(X) Upper limb(s) (whole or unknown part)
(O) Whole body
(W) Wrist–hand

Aspect of Injury

(A) Anterior–front
(C) Central
(I) Inferior–lower
(U) Injured, unknown aspect
(L) Left
(P) Posterior–back
(R) Right
(S) Superior–upper
(W) Whole region

Lesion

(A) Abrasion
(M) Amputation
(V) Avulsion
(B) Burn
(K) Concussion
(C) Contusion
(N) Crush
(G) Detachment, separation
(D) Dislocation
(F) Fracture
(Z) Fracture and dislocation
(U) Injured, unknown lesion
(L) Laceration
(O) Other
(P) Perforation, puncture
(R) Rupture
(S) Sprain
(T) Strain
(E) Total severance, transection

System/Organ

(W) All systems in region
(A) Arteries–veins
(B) Brain
(D) Digestive
(E) Ears
(O) Eye
(H) Heart
(U) Injured, unknown system
(I) Integumentary
(J) Joints
(K) Kidneys
(L) Liver
(M) Muscles
(N) Nervous system
(P) Pulmonary–lungs
(R) Respiratory
(S) Skeletal
(C) Spinal cord
(Q) Spleen
(T) Thyroid, other endocrine gland
(G) Urogenital
(V) Vertebrae

Abbreviated Injury Scale

(1) Minor injury
(2) Moderate injury
(3) Serious injury
(4) Severe injury
(5) Critical injury
(6) Maximum (untreatable)
(7) Injured, unknown severity

OFFICIAL INJURY DATA—SKELETAL INJURIES

Indicate the *Location, Lesion, Detail* (size, depth, fracture type, head injury clinical signs and neurological deficits), and *Source* of all injuries indicated by official sources (or from PAR or other unofficial sources if medical records and interviewee data are unavailable.)

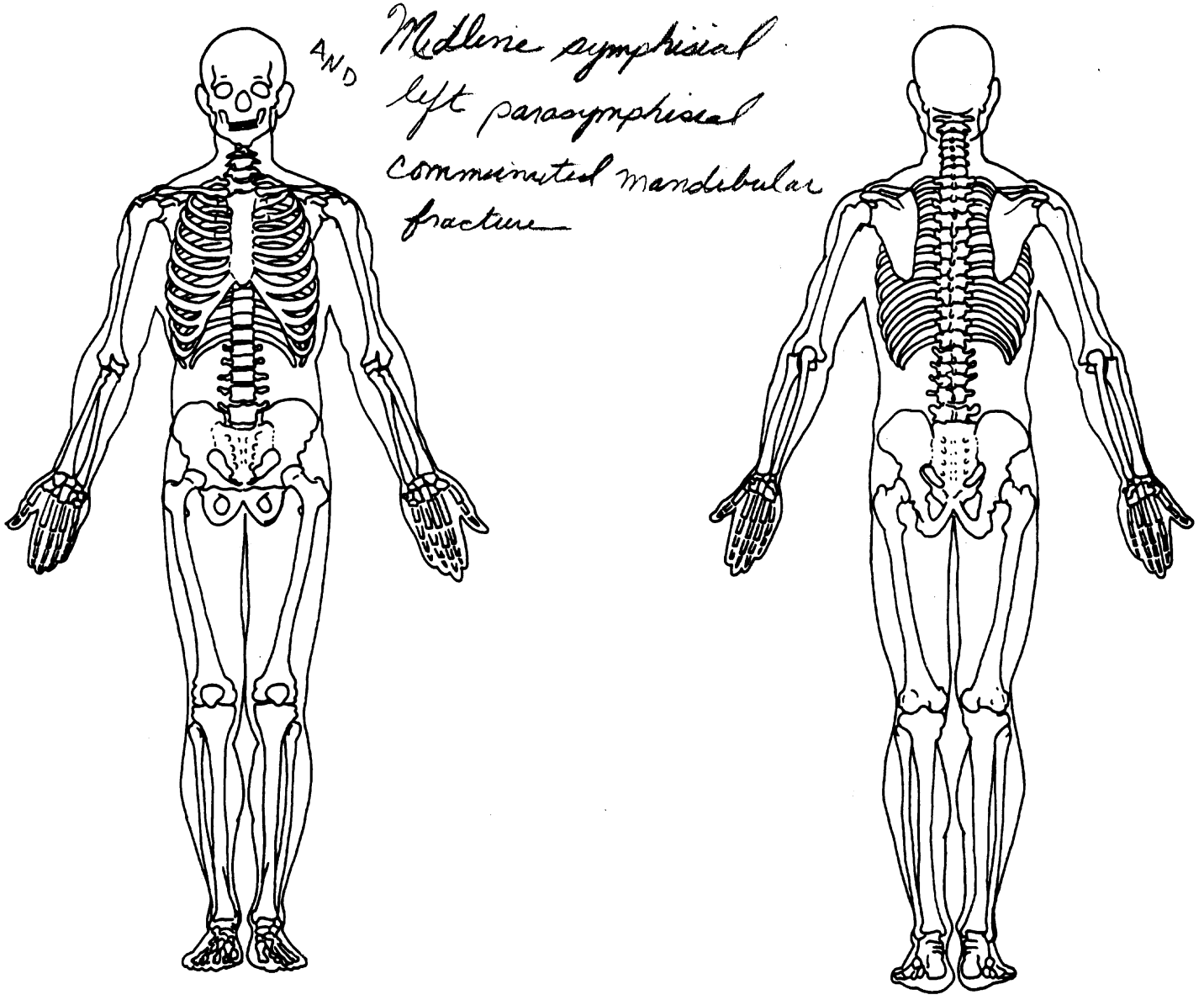

OFFICIAL INJURY DATA – INTERNAL INJURIES

Indicate the *Location, Lesion, Detail* (size, depth, fracture type, head injury clinical signs and neurological deficits), and *Source* of all injuries indicated by official sources (or from PAR or other unofficial sources if medical records and interviewee data are unavailable.)

Concussion – No L.O.C. stated
(CT brain scan)
Extracranial contusion
(L) frontal locale

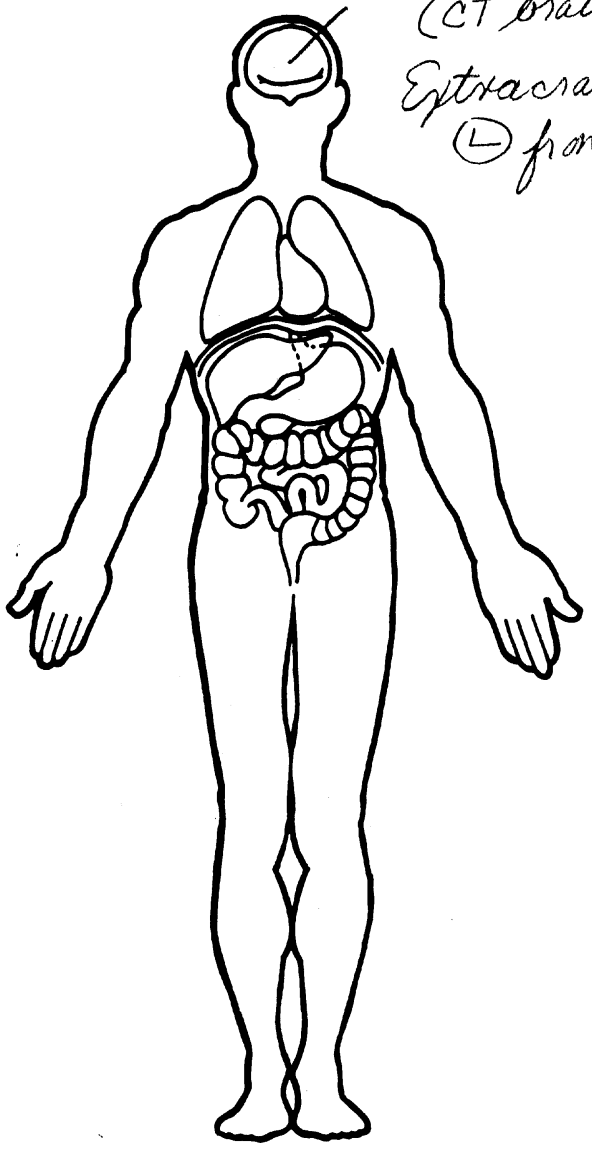

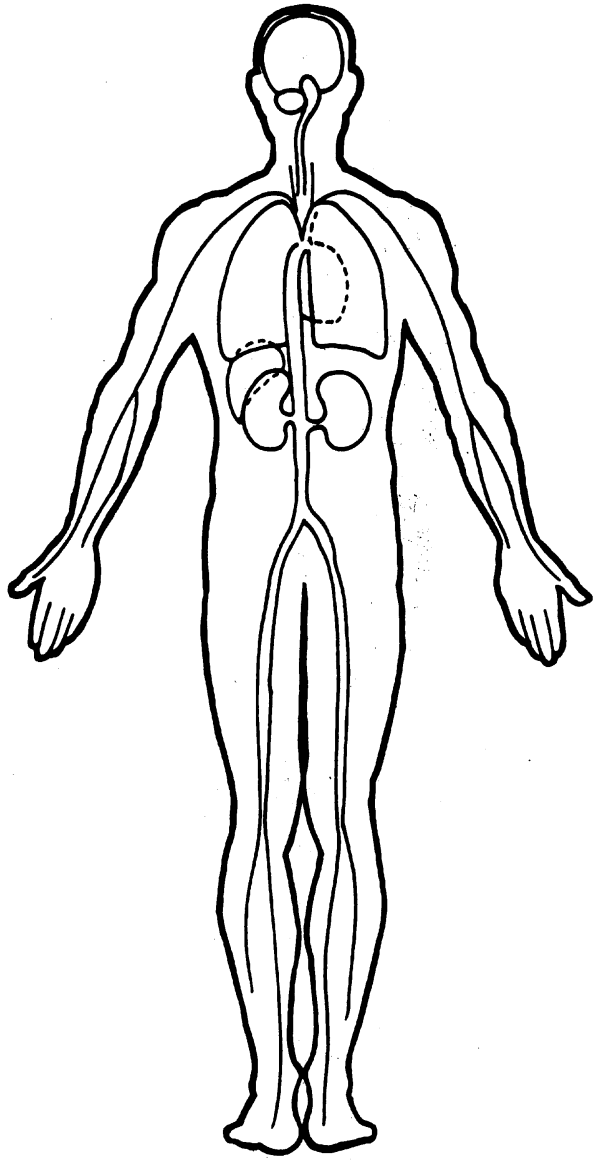

U.S. Department of Transportation
National Highway Traffic Safety Administration

EXTERIOR VEHICLE FORM

NATIONAL ACCIDENT SAMPLING SYSTEM
CRASHWORTHINESS DATA SYSTEM

1. Primary Sampling Unit Number: 1 2	3. Vehicle Number: Parked
2. Case Number–Stratum: 0 8 2 A	

VEHICLE IDENTIFICATION

VIN 1 G C C T 1 4 B 3 F 2 [redacted] Model Year 1985

Vehicle Make (specify): Chevrolet Vehicle Model (specify): S10 4X4

LOCATOR

Locate the end of the damage with respect to the vehicle longitudinal center line or bumper corner for end impacts or an undamaged axle for side impacts.

Specific Impact No.	Location of Direct Damage	Location of Field L
1	beg @ (L) front corner	beg @ L front corner
	out 3.65"	
cord	set 38" from center of vel to allow clearance tires	

CRUSH PROFILE

NOTES: Identify the plane at which the C-measurements are taken (e.g., at bumper, above bumper, at sill, above sill, etc.) and label adjustments (e.g., free space).

Measure and document on the vehicle diagram the location of maximum crush.

Measure C1 to C6 from driver to passenger side in front or rear impacts and rear to front in side impacts.

Free space value is defined as the distance between the baseline and the original body contour taken at the individual C locations. This may include the following: bumper lead, bumper taper, side protrusion, side taper, etc. Record the value for each C-measurement and maximum crush.

Use as many lines/columns as necessary to describe each damage profile.

Specific Impact Number	Plane of C-Measurements	Direct Damage Width (CDC)	Direct Damage Max Crush	Field L	C_1	C_2	C_3	C_4	C_5	C_6	±D
1	meas	196	8.0	195.7	4.25	3.25	4.0	4.0	4.25	6.5	-11.75
	freespace		1.85		.5	0	.35	.35	.6	2.6	
	cord adjust		3.65		3.65	3.65	3.65	3.65	3.65	3.65	
1	actual C's		2.5		.1	0	0	0	0	.25	
			S2 thru								
			C5 & C6								
		Most	of	impact	absorbed	by	oversize				
			tires	extending	beyond	rider					
			of	parked	veh						

[redacted] /88

HS Form 435A
1/88

VEHICLE DAMAGE SKETCH

TIRE—WHEEL DAMAGE

a. Rotation physically restricted		b. Tire deflated	
RF	2	RF	2
LF	2	LF	2
RR	2	RR	2
LR	2	LR	2

(1) Yes (2) No (8) NA (9) Unk.

TYPE OF TRANSMISSION

☐ Manual ☒ Automatic

ORIGINAL SPECIFICATIONS

Wheelbase	117.9
Overall Length	199.5
Maximum Width	64.7
Curb Weight	3045
Average Track	58.0
Front Overhang	30.6
Rear Overhang	51
Engine Size: cyl./ displ.	V6/2.8L
Undeformed End Width	59.5

WHEEL STEER ANGLES
(For locked front wheels or displaced rear axles only)

RF ± ___°
LF ± ___°
RR ± ___°
LR ± ___°

Within ±5 degrees

DRIVE WHEELS

☐ FWD ☐ RWD ☒ 4WD

Approximate Cargo Weight 0

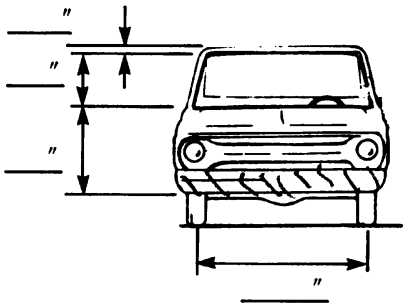

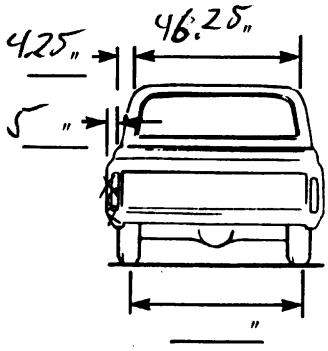

2870 = ship wgt w/ 4cyl
100 - fuel tank
75 - V6
3045 - CW

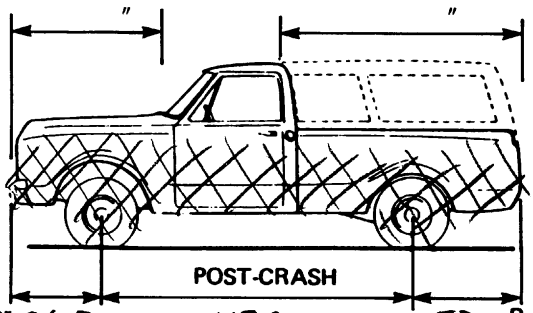

Bumper corner 26.5" 117.9" 50" Bumper corner
Stringline 30.6" 51" Stringline

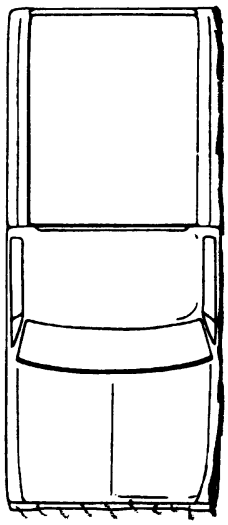

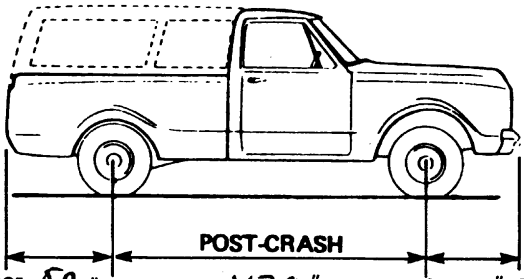

Bumper corner 50" 117.9" 27.5" Bumper corner
Stringline 51" 30.6" Stringline

NOTES: Sketch new perimeter and cross hatch direct damage and single hatch induced damage on all views. Annotate observations which might be useful in reconstructing the accident (e.g., grass in tire bead, direction of striations, scuff on sidewall, etc.). If pulling trailer, sketch type of trailer and damage received on the back of this page.
Annotate any damage caused by extrication such as component removal by torching, prying, or hydraulic shears.

BEST AVAILABLE

CHEVROLET S-10 PICKUPS

CHEVROLET

REGULAR CAB 6ft. FLEETSIDE PICKUP (4x2 & 4x4)

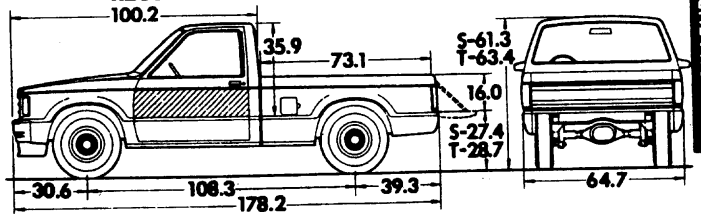

REGULAR CAB 7ft. 5" FLEETSIDE PICKUP (4x2 & 4x4)

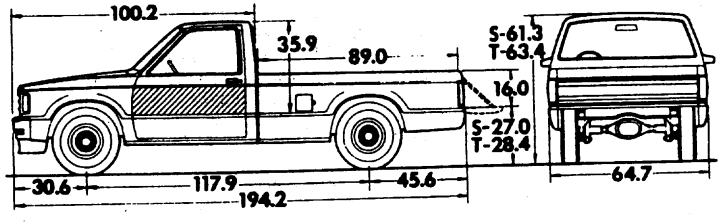

EXTENDED CAB 6ft. FLEETSIDE PICKUP (4x2 & 4x4)

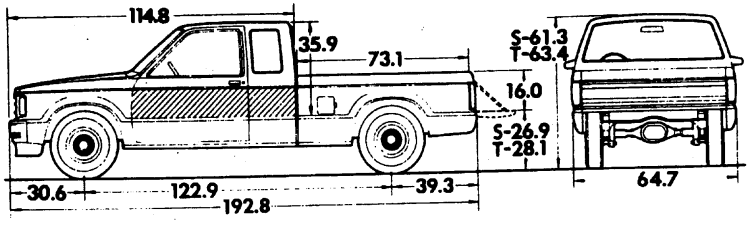

CHEVROLET S-10 4x2 PICKUP

OPTIONAL EQUIPMENT: Durango, Tahoe, or Sport model options; air conditioning; increased capacity electrical and cooling systems; Cold Climate package; Operating Convenience package; Vinyl or Cloth bucket seats; Tinted glass; Rear jump seats w/extended cab; center console; rear painted bumper or front & rear chromed bumpers; Calif. or High Altitude emission systems; Custom, Special, or Sport two-tone paint; 9 x 6.5" side view mirrors; Pickup box side rails; HD Front & Rear shocks; Front stabilizer bar; HD Trailering special.

CHEVROLET S-10 4x4 PICKUP

GVW Ratings: 3,850-5,345 Lbs.

ENGINE: Standard: Chevrolet 2.5L 151-EFI L4, 92 NHP @ 4400 RPM.
Optional: Chevrolet 2.8L* 173-2, V6, 115 NHP @ 4800 RPM
* Requires Power Steering.

MODELS AVAILABLE: 6' or 7'5" box Fleetside pickup w/Regular cab or Extended cab, Standard model. Optional: Durango, Tahoe, or Sport model.

GVW RATING	MINIMUM EQUIPMENT REQUIRED FOR GVW RATING
3,850-4,820	Standard - 1000 lb. payload, Reg. & Extended cabs.
4,435-5,345	1,500 lb. HD Payload pkg.(C3A), pkg. includes 1,350 lb. rear springs.

CURB WEIGHTS & DIMENSIONS: (Standard equipment, 4 cyl. engine)

Model	Model #	Front	Rear	Total	WB	OAL	OH
6' Fleetside	T10603	1,758	1,153	2,901	108.3	178.2	63.4
7'5" Fleetside	T10803	1,795	1,174	2,969	117.9	194.2	63.4
6' Extend-cab	T10653	1,824	1,218	3,042	122.9	192.8	63.4

GENERAL SPECIFICATIONS

FRONT AXLE: Chevrolet Independent front driving axle, single reduction, central disconnect front axle/transfer case w/aluminum carrier, rated capacity 2,700 lbs., 3.73 ratio, Automatic Locking front hubs, 6.9" clearance. Optional: w/2.5L eng. - 4.11 ratio; w/2.8L eng. - 3.42, or 4.11 ratios.

CDC WORKSHEET

CODES FOR OBJECT CONTACTED

01-30—Vehicle Number

Noncollision
- (31) Overturn—rollover
- (32) Fire or explosion
- (33) Jackknife
- (34) Other intraunit damage (specify): _____
- (35) Noncollision injury
- (38) Other noncollision (specify): _____
- (39) Noncollision—details unknown

Collision with Fixed Object
- (41) Tree (≤4 inches in diameter)
- (42) Tree (>4 inches in diameter)
- (43) Shrubbery or bush
- (44) Embankment
- (45) Breakaway pole or post (any diameter)

Nonbreakaway Pole or Post
- (50) Pole or post (≤4 inches in diameter)
- (51) Pole or post (>4 but ≤12 inches in diameter)
- (52) Pole or post (>12 inches in diameter)
- (53) Pole or post (diameter unknown)
- (54) Concrete traffic barrier
- (55) Impact attenuator
- (56) Other traffic barrier (specify): _____
- (57) Fence
- (58) Wall
- (59) Building
- (60) Ditch or Culvert
- (61) Ground
- (62) Fire hydrant
- (63) Curb
- (64) Bridge
- (68) Other fixed object (specify): _____
- (69) Unknown fixed object

Collision With Nonfixed Object
- (71) Motor vehicle not in transport
- (72) Pedestrian
- (73) Cyclist or cycle
- (74) Other nonmotorist or conveyance (specify): _____
- (75) Vehicle occupant
- (76) Animal
- (77) Train
- (78) Trailer, disconnected in transport
- (88) Other nonfixed object (specify): _____
- (89) Unknown nonfixed object

(98) Other event (specify): _____

(99) Unknown event or object

DEFORMATION CLASSIFICATION BY EVENT NUMBER

Accident Event Sequence Number	Object Contacted	(1) (2) Direction of Force (degrees)	Incremental Value of Shift	(3) Deformation Location	(4) Specific Longitudinal or Lateral Location	(5) Specific Vertical or Lateral Location	(6) Type of Damage Distribution	(7) Deformation Extent
05	01	280	00	L	D	E	W	01

US Department of Transportation
National Highway Traffic Safety Administration

NATIONAL ACCIDENT SAMPLING SYSTEM
CRASHWORTHINESS DATA SYSTEM

CRASHPC PROGRAM SUMMARY

Identifying Title

Primary Sampling Unit	Case No.–Stratum	Accident Event Sequence No.	Date (mm dd yy)
12	082A	05	[redacted] 88

CRASHPC Vehicle Identification

	Year	Make	Model	NASS Veh. No.
Vehicle 1	75	07	473	1
Vehicle 2	85	Chevy	S10 Pup	Pushed

GENERAL INFORMATION

	VEHICLE 1	VEHICLE 2
Size	6	5
Weight (Curb + Occupant(s) + Cargo =)	3788 + 160 + 175 = 4123	3045 + 0 + 0 = 3045
CDC	03RDEW2	09LPEW1
PDOF	090	-080
Stiffness	6	5

SCENE INFORMATION

Rest and Impact Positions [X] No, ***Go To Damage Information*** [ ] Yes

	VEHICLE 1	VEHICLE 2
Rest Position		
X	___.___	___.___
Y	___.___	___.___
PSI	___.___	___.___
Impact Position		
X	___.___	___.___
Y	___.___	___.___
PSI	___.___	___.___
Slip Angle	___	___

VEHICLE MOTION

Sustained Contact [ ] No [ ] Yes

	VEHICLE 1	VEHICLE 2
Skidding	[ ] No [ ] Yes	[ ] No [ ] Yes
Skidding Stop Before Rest	[ ] No [ ] Yes	[ ] No [ ] Yes
End-of-Skidding Position		
X	___.___	___.___
Y	___.___	___.___
PSI	___.___	___.___
Curved Path	[ ] No [ ] Yes	[ ] No [ ] Yes
Point on Path	X ___.___ Y ___.___	X ___.___ Y ___.___
Rotation Direction	[ ] None [ ] CW [ ] CCW	[ ] None [ ] CW [ ] CCW
Rotation > 360°	[ ] No [ ] Yes	[ ] No [ ] Yes

HS Form 435D
1/88

BEST AVAILABLE

FRICTION INFORMATION

Coefficient of Friction . ___ ___ ___

Rolling Resistance Option ___

Vehicle 1 Rolling Resistance

LF ___ . ___ ___ RF ___ . ___ ___

LR ___ . ___ ___ RR ___ . ___ ___

Vehicle 2 Rolling Resistance

LF ___ . ___ ___ RF ___ . ___ ___

LR ___ . ___ ___ RR ___ . ___ ___

TRAJECTORY INFORMATION

Trajectory Data [ ] No [ ] Yes

If No, Go To Damage Information

Vehicle 1 Steer Angles

LF ___ ___ ___ RF ___ ___ ___

LR ___ ___ ___ RR ___ ___ ___

Vehicle 2 Steer Angles

LF ___ ___ ___ RF ___ ___ ___

LR ___ ___ ___ RR ___ ___ ___

Terrain Boundary [ ] No [ ] Yes

First Point

X ___ ___ ___ . ___ Y ___ ___ ___ . ___

Second Point

X ___ ___ ___ . ___ Y ___ ___ ___ . ___

Secondary Friction Coefficient . ___ ___ ___

DAMAGE INFORMATION

	VEHICLE 1	VEHICLE 2
Damage Length	147.__	195.7
Crush Depths C1	2.__	.1
C2	5.3	.0
C3	5.1	.0
C4	0.__	.0
C5	.5	.0
C6	0.__	.25
Damage Offset	0 33.5	0 11.75

IF THIS COMMON IMPACT WAS WITH A MOTOR VEHICLE *NOT IN TRANSPORT*, FILL IN THE INFORMATION BELOW.

Model Year: _____

Make: _____

Model: _____

VIN: _____

The Weight, CDC, Scene Data and Damage Information for this vehicle should be recorded above.

Complete and ATTACH the appropriate vehicle damage sketch and dimensions to the Form.

U.S. Department of Transportation
National Highway Traffic Safety Administration

OLDMIS PROGRAM SUMMARY

NATIONAL ACCIDENT SAMPLING SYSTEM
CRASHWORTHINESS DATA SYSTEM

Identifying Title

Primary Sampling Unit	Case No.–Stratum	Accident Event Sequence No.	Date (mm dd yy)
12	082A	01	[redacted] 88

OLDMIS Vehicle Identification

	Year	Make	Model	NASS Veh. No.
Vehicle 1	75	07	473	1
Vehicle 2	85	21	001	2

GENERAL INFORMATION

Size Category for Each Vehicle

Vehicle 1: 6
Vehicle 2: 3

Stiffness Category for Each Vehicle

Vehicle 1: 8
Vehicle 2: 3

Vehicle Weight

	Curb	+ Occupant(s)	+ Cargo	=
Veh. 1	3788	160	175	4123
Veh. 2	3204	482	0	4168

Vehicle Heading Angles At Impact, in Degrees

Vehicle 1: 310°
Vehicle 2: 270°

Damaged Area of Each Vehicle

(F = Front, L = Left, R = Right, B = Back)

Vehicle 1: F
Vehicle 2: L

DAMAGE INFORMATION

For Which Vehicle Is The Damage Known: 1

Damage Width in Inches for Known Vehicle: L 72.8

Number of Crush Measurements for Known Vehicle (2,4,or 6): 6

Crush Measurements for Known Vehicle (Inches)

C_1 11.3
C_2 8.8
C_3 4.8
C_4 9.7
C_5 9.2
C_6 27.6

Damage Midpoint Offset (D) for Known Vehicle (Inches): ± 0.

PDOF for Known Vehicle in Degrees (−360° to +360°): 30

Estimated Damage Midpoint Offset (D) for Unknown Vehicle (Inches): 40.0

HS Form 432C
1/88

MISSING VEHICLE RECONSTRUCTION RESULTS

P12

VEHICLE 1 DATA- FRONT DAMAGE KNOWN

SIZE CLASS: 6 STIFFNESS CLASS: 8 WEIGHT: 4123.0 LBS (1869.8 KG)

MASS:10.670 LB-SEC**2/IN (120.55 NT-SEC**2/CM)
RADIUS OF GYRATION: 4229.0 IN**2 (27283.8 CM**2)

DAMAGE LENGTH: 72.80 IN (184.9 CM) DAMAGE OFFSET: .0 IN (.0 CM)

DAMAGE DEPTH:	IN	(CM)
C1	11.3	28.7
C2	8.8	22.4
C3	4.8	12.2
C4	9.7	24.6
C5	9.2	23.4
C6	27.6	70.1

HEADING ANGLE: 310.0 DEG PRINCIPAL FORCE ANGLE: 30.0 DEG

FORCE: 84015.4 LBS (373700.3 NT) ENERGY: 85651.1 FT-LBS (116115.8 NT-M)

DELTA-V RESULTS	MPH	(KPH)
RESULTANT:	21.65	34.83
LONGITUDINAL:	-18.75	-30.17
LATERAL:	-10.82	-17.41

VEHICLE 2 DATA- SIDE DAMAGE UNKNOWN

SIZE CLASS: 3 STIFFNESS CLASS: 3 WEIGHT: 4168.0 LBS (1890.2 KG)

MASS:10.787 LB-SEC**2/IN (121.87 NT-SEC**2/CM)
RADIUS OF GYRATION: 3324.0 IN**2 (21445.1 CM**2)

ESTIMATED DAMAGE DIMENSIONS--

DAMAGE LENGTH: 67.94 IN (172.6 CM) DAMAGE OFFSET: 40.0 IN (101.6 CM)

DAMAGE DEPTH:	IN	(CM)
C1	34.8	88.5
C2	16.1	40.9
C3	16.6	42.2
C4	11.6	29.5
C5	15.7	39.9
C6	18.2	46.3

HEADING ANGLE: 270.0 DEG PRINCIPAL FORCE ANGLE: -110.0 DEG

FORCE: 84015.4 LBS (373700.5 NT) ENERGY: 80361.3 FT-LBS (108944.5 NT-M)

DELTA-V RESULTS	MPH	(KPH)
RESULTANT:	21.42	34.46
LONGITUDINAL:	7.32	11.78
LATERAL:	20.12	32.38

ANOTHER RUN? (Y/N)

```
Y

ENTER AN IDENTIFYING TITLE
F12 082A

ENTER A SIZE CATEGORY FOR EACH VEHICLE
6 3

ENTER A STIFFNESS CATEGORY FOR EACH VEHICLE
8 3

ENTER VEHICLE WEIGHTS, OR ZERO IF UNKNOW
4123 4168

ENTER VEHICLE HEADING ANGLES AT IMPACT, IN DEGREES
310 270

ENTER A CODE FOR THE DAMAGED AREA OF EACH VEHICLE
F = FRONT, L = LEFT, R = RIGHT, B = BACK
F L

FOR WHICH VEHICLE IS THE DAMAGE KNOWN?
1

ENTER DAMAGE WIDTH IN INCHES FOR VEHICLE 1
72.8

ENTER NUMBER OF CRUSH MEASUREMENTS FOR VEHICLE 1
6

ENTER 6 CRUSH MEASUREMENTS FOR VEHICLE 1
11.3 8.8 4.8 9.7 9.2 27.6

ENTER DAMAGE MIDPOINT OFFSET FOR VEHICLE 1
0

ENTER THE PRINCIPAL DIRECTION OF FORCE FOR VEHICLE 1
  ( IN DEGREES, -360 < X < 360 )
30

ENTER ESTIMATED DAMAGE MIDPOINT OFFSET FOR VEHICLE 2
40

INPUT COMPLETE-- THANK YOU.
```

NO MORE INTER ERRORS - PRESS ENTER

****

****

****

****

HH1091 2 If TREATMENT OA35 equals 0, 4 or 5, then WORKING DAYS LOST OA38
HH1092 should equal 00, 01,97 or 99.

****

****

****

****

****

****

****

****

****

****

****

12082A00000011[redacted]881.1310000000000220550000005[redacted]88[redacted]88 [redacted]88
12082A00010012[redacted]881.1310000000000115F0203L
12082A00020012[redacted]881.1310000000000203L59000
12082A00030012[redacted]881.1310000000000115L63000
12082A00040012[redacted]881.1310000000000115L68000
12082A00050012[redacted]881.1310000000000115R71000
12082A01000021 1.13 0000000007507474331D17BD55[redacted] 199116450188101010380
020000003102703 22-19-11085711
12082A01000031 1.13 0000000000010201FDEW03046809LZEW03073110905100928 000085
001006010000-059111330
12082A01000041 1.13 0000000000011000000000000008800000000000000000000000000
12082A01000042 1.13 0000000001305321301 12
198 00+02-01209091180
12082A01010051 1.13 0000010003116816011100000030311000500110000000000002410
061000000005
12082A01010161 1.13 0000000003CWAI2979700
12082A01010261 1.13 0000000003FCLI1041102
12082A01010361 1.13 0000000003NPTM1041202
12082A01010461 1.13 0000000007SLFS2201100
12082A01010561 1.13 0000000007FILI1041102 [redacted]

12082A02000021 1.13 0000000008521001021G3GM47A1FH[redacted]1997964501891030303 2
0000000027031032 1+07+20080411
12082A02000031 1.13 0000000000010109LYAW03025999999999
011081
12082A02000041 1.13 0000000009831000000004606068899000900120202001202010 0
12082A02000042 1.13 0000000001110331106332119322219321101211303 13
201+06+05+01000054181
12082A02010051 1.13 0000000004626416511100000404110005407200000000000004110
0629999000019
12082A02010161 1.13 0000000002QRCI1979700
12082A02010261 1.13 0000000002QRLI1979700
12082A02010361 1.13 0000000002TRCI1979700
12082A02010461 1.13 0000000002LLAI1979700
12082A02010561 1.13 0000000002TLAI1979700
12082A02010661 1.13 0000000002TLLI1979700
12082A02010761 1.13 0000000002TLCI1979700
12082A02010861 1.13 0000000002MWLI1979700
12082A02010961 1.13 0000000002WRLI1979700
12082A02011061 1.13 0000000002ERCI1979700
12082A02011161 1.13 0000000002ERAI1979700
12082A02011261 1.13 0000000002ALLI1979700
12082A02011361 1.13 0000000002RLLI1979700
12082A02011461 1.13 0000000002WLPI1979700
12082A02011561 1.13 0000000002HRCI1979700
12082A02011661 1.13 0000000002HRLI1979700
12082A02011761 1.13 0000000002FILI1979700
12082A02011861 1.13 0000000002FRLI2979700
12082A02011961 1.13 0000000002HSLI2979700
12082A02020051 1.13 0000000004926114721311242040000000030710000000000003310
7610000000008
12082A02020161 1.13 0000000002CLFS4979700
12082A02020261 1.13 0000000002CRFS4979700
12082A02020361 1.13 0000000002SRFS2979700
12082A02020461 1.13 0000000002FCLI1979700
12082A02020561 1.13 0000000002HLLE1979700
12082A02020661 1.13 0000000002HPLI1979700
12082A02020761 1.13 0000000007FIFS1841100
12082A02020861 1.13 0000000007LLLI1101100
12082A02030051 1.13 0000000004026517022201632030000000020620000000000003310
5610000000007
12082A02030161 1.13 0000000002HWKB2979700
12082A02030261 1.13 0000000002FSCI1979700
12082A02030361 1.13 0000000002FIFS3979700
12082A02030461 1.13 0000000002FILI1979700
12082A02030561 1.13 0000000002FWLI1979700
12082A02030661 1.13 0000000002HULI1979700
12082A02030761 1.13 0000000002LRAI1979700
12082A88888888[redacted]881.120000000000YY0202YYY0301Y0000000000000000000000000000000
00000000
12082A99999999[redacted]881.120000000000000000000000000000000000000000000000000000010000
00000000000001
EH0011 2 If TREATMENT 0A35 equals 1, then 1st DEFORMATION EXTENT EV11
EH0012 should be greater than 03.
VEH NUM = 02 OCCUPANT NUM = 01

1988 NATIONAL ACCIDENT SAMPLING SYSTEM

ERROR SUMMARY SCREEN [redacted] 1989

CURRENT VERSION: 1.13

FORM NAME	NUMBER OF DOLLAR SIGNS	NUMBER OF LEVEL 1 ERRORS	NUMBER OF LEVEL 2 ERRORS	VERSION NUMBER CONSISTENT
Accident	0	0	0	Y
General Vehicle	0	0	0	Y
Vehicle Exterior	0	0	0	Y
Vehicle Interior	0	0	0	Y
Occupant Assessment	0	0	1	Y
Occupant Injury	0	0	0	Y
Total Inter Errors		0	1	
Total Case Errors	0	0	2	

BEST AVAILABLE

U.S. Department of Transportation
National Highway Traffic Safety Administration

SLIDE INDEX

NATIONAL ACCIDENT SAMPLING SYSTEM
CRASHWORTHINESS DATA SYSTEM

Primary Sampling Unit Number 1 2 Case Number–Stratum 0 8 2 A

Slide No.	Vehicle No.	Direction of Picture	Description of Slide Subject Matter
1-3	1	North	approaching impact #1
4	1	North	@ impact #1
5-8	1	Northwest	approaching imps #3 + #4 w/ island +
			pumps- note gouges immediately post
			impact #1
9-11	1	Northwest	@ impacts #3 + #4
12	1	Southwest	detailing struck island
13-17	1	Northwest	rotating CCW to impact #5 and final
			rest
18	1	Northwest	@ impact #5 and final rest
19-21	1	Southeast	Opposite direction of Travel thru entire
			sequence
22-24	2	West	approaching impact #1
25-30	2	North	rotating CW post impact #1 approaching
			impact #2
31-33	2	North	@ impact #2
34	2	North	detail of Imp #2 from (L) rear
			corner V2
35-37	2	Southwest	post impact to final rest
38-41	2	38-39-Northeast 40-South	Opposite Direction of Travel thru entire
		41- East	accident sequence
42-44	parked	42-43-Northwest 44-Southwest	Showing evidence left by (R) rear struck
			parked veh as that veh pushed
			sideways by impact #5.
45-56	1	Ext	Front damage from impact #1
57-65	1	Ext	(L) damage from impact #4 w/ gas pumps
66-68	1	Ext	(L) rear wheel damage from imp #3 w/ island

HS Form 434B
1/88

Slide No.	Vehicle No.	Direction of Picture	Description of Slide Subject Matter
69-77	1	Ext	(R) side damage from imp #5 w/ parked vehicle
78-95	1	Int	Showing occupant contacts as noted on IVF
96-105	2	Ext	(L) front damage imp #1
106-107	2	Ext	Showing (L) front section loose & moveable therefore no meas taken - also damage from imp #1 and imp #2 contaminate each other - also jaws of life used to open (L) front door further altering damage
108-109	2	Ext	evidence of jaws of life used
110-123	2	Ext	(L) side damage impact #2 - note plants stuck in veh
124-125	2	Ext	rear bumper torn off in impact #2
126-129	2	Ext	non-contacted areas
130-151	2	Int	Showing occupant contacts as noted on IVF
152-153	2	Int	showing driver's belt cut by rescuers
154-161	parked	Ext	showing (L) side damage from imp #5
162-164	parked	Ext	non-contacted areas

PSU 12-082A (1988) #1

PSU 12-082A (1988) #2

PSU 12-082A (1988) #3

PSU 12-082A (1988) #4

PSU 12-082A (1988) #5

PSU 12-082A (1988) #6

PSU 12-082A (1988) #7

PSU 12-082A (1988) #8

PSU 12-082A (1988) #9

PSU 12-082A (1988) #10

PSU 12-082A (1988) #11

PSU 12-082A (1988) #12

PSU 12-082A (1988) #13

PSU 12-082A (1988) #14

PSU 12-082A (1988) #15

PSU 12-082A (1988) #16

PSU 12-082A (1988) #17

PSU 12-082A (1988) #18

PSU 12-082A (1988) #19

PSU 12-082A (1988) #20

PSU 12-082A (1988) #21

PSU 12-082A (1988) #22

PSU 12-082A (1988) #23

PSU 12-082A (1988) #24

PSU 12-082A (1988) #25

PSU 12-082A (1988) #26

PSU 12-082A (1988) #27

PSU 12-082A (1988) #28

PSU 12-082A (1988) #29

PSU 12-082A (1988) #30

PSU 12-082A (1988) #31

PSU 12-082A (1988) #32

PSU 12-082A (1988) #33

PSU 12-082A (1988) #34

PSU 12-082A (1988) #35

PSU 12-082A (1988) #36

PSU 12-082A (1988) #37

PSU 12-082A (1988) #38

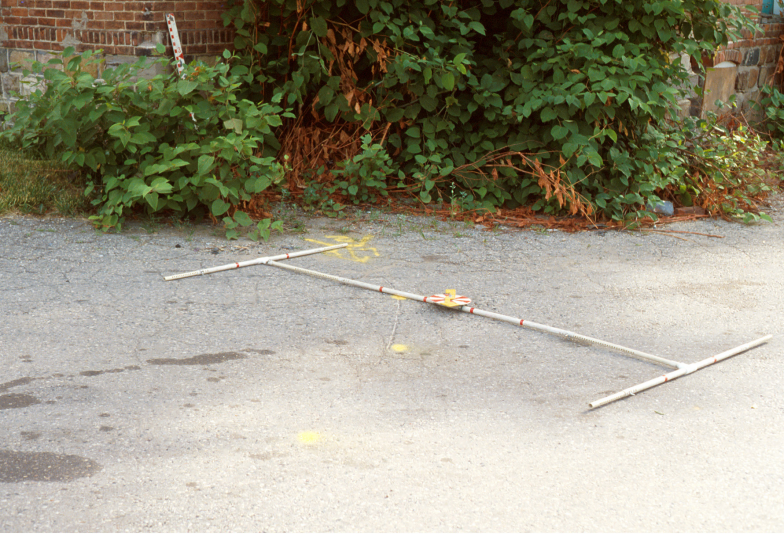

PSU 12-082A (1988) #39

PSU 12-082A (1988) #40

PSU 12-082A (1988) #41

PSU 12-082A (1988) #42

PSU 12-082A (1988) #43

PSU 12-082A (1988) #44

PSU 12-082A (1988) #45

PSU 12-082A (1988) #46

PSU 12-082A (1988) #47

PSU 12-082A (1988) #48

PSU 12-082A (1988) #49

PSU 12-082A (1988) #50

PSU 12-082A (1988) #51

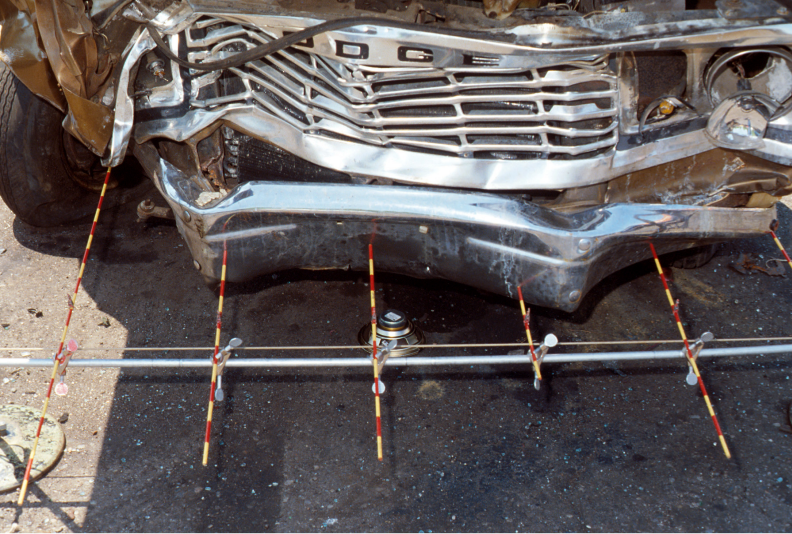

PSU 12-082A (1988) #52

PSU 12-082A (1988) #53

PSU 12-082A (1988) #54

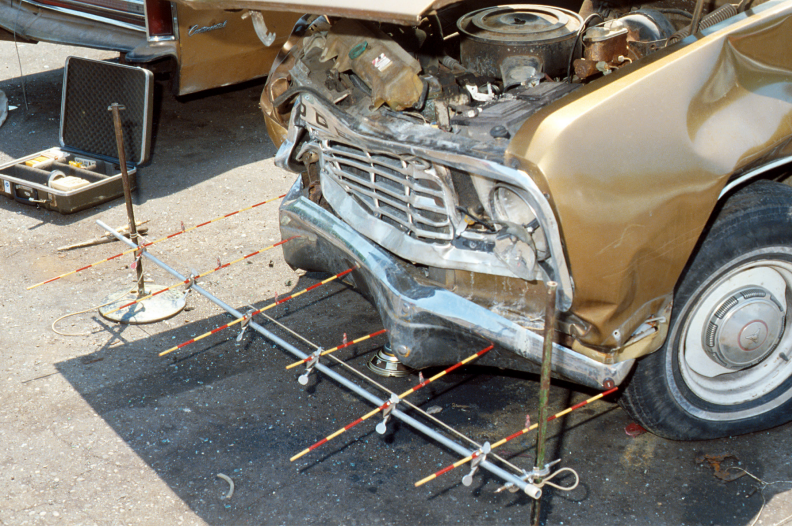

PSU 12-082A (1988) #55

PSU 12-082A (1988) #56

PSU 12-082A (1988) #57

PSU 12-082A (1988) #58

PSU 12-082A (1988) #59

PSU 12-082A (1988) #60

PSU 12-082A (1988) #61

PSU 12-082A (1988) #62

PSU 12-082A (1988) #63

PSU 12-082A (1988) #64

PSU 12-082A (1988) #65

PSU 12-082A (1988) #66

PSU 12-082A (1988) #67

PSU 12-082A (1988) #68

PSU 12-082A (1988) #69

PSU 12-082A (1988) #70

PSU 12-082A (1988) #71

PSU 12-082A (1988) #72

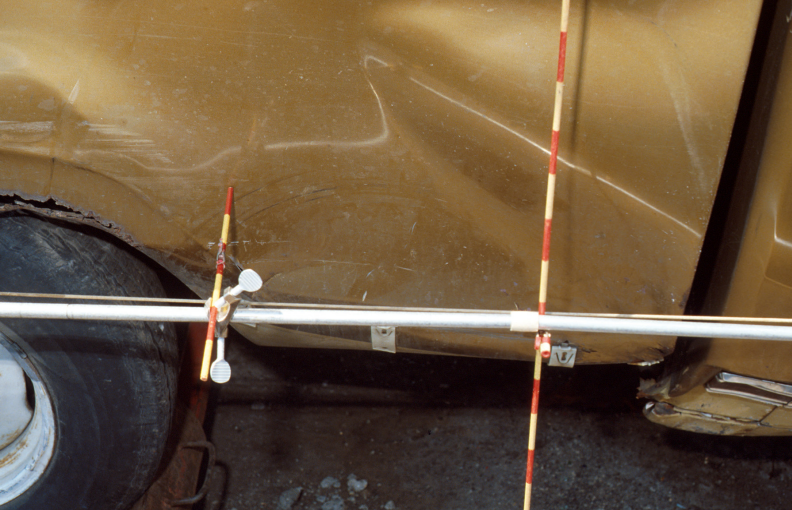

PSU 12-082A (1988) #73

PSU 12-082A (1988) #74

PSU 12-082A (1988) #75

PSU 12-082A (1988) #76

PSU 12-082A (1988) #77

PSU 12-082A (1988) #78

PSU 12-082A (1988) #79

PSU 12-082A (1988) #80

PSU 12-082A (1988) #81

PSU 12-082A (1988) #82

PSU 12-082A (1988) #83

PSU 12-082A (1988) #84

PSU 12-082A (1988) #85

PSU 12-082A (1988) #86

PSU 12-082A (1988) #87

PSU 12-082A (1988) #88

PSU 12-082A (1988) #89

PSU 12-082A (1988) #90

PSU 12-082A (1988) #91

PSU 12-082A (1988) #92

PSU 12-082A (1988) #93

PSU 12-082A (1988) #94

PSU 12-082A (1988) #95

PSU 12-082A (1988) #96

PSU 12-082A (1988) #97

PSU 12-082A (1988) #98

PSU 12-082A (1988) #99

PSU 12-082A (1988) #100

PSU 12-082A (1988) #101
Best Available

PSU 12-082A (1988) #102

PSU 12-082A (1988) #103

PSU 12-082A (1988) #104

PSU 12-082A (1988) #105

PSU 12-082A (1988) #106
Best Available

PSU 12-082A (1988) #107

PSU 12-082A (1988) #108

PSU 12-082A (1988) #109

PSU 12-082A (1988) #110

PSU 12-082A (1988) #111

PSU 12-082A (1988) #112

PSU 12-082A (1988) #113

PSU 12-082A (1988) #114

PSU 12-082A (1988) #115

PSU 12-082A (1988) #116

PSU 12-082A (1988) #117

PSU 12-082A (1988) #118

PSU 12-082A (1988) #119

PSU 12-082A (1988) #120

PSU 12-082A (1988) #121

PSU 12-082A (1988) #122

PSU 12-082A (1988) #123

PSU 12-082A (1988) #124

PSU 12-082A (1988) #125

PSU 12-082A (1988) #126

PSU 12-082A (1988) #127

PSU 12-082A (1988) #128

PSU 12-082A (1988) #129

PSU 12-082A (1988) #130

PSU 12-082A (1988) #131

PSU 12-082A (1988) #132

PSU 12-082A (1988) #133

PSU 12-082A (1988) #134

PSU 12-082A (1988) #135

PSU 12-082A (1988) #136

PSU 12-082A (1988) #137

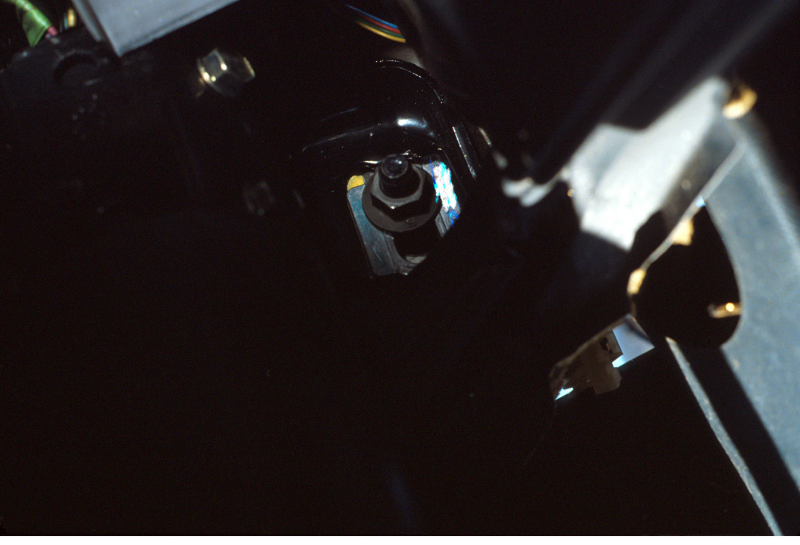

PSU 12-082A (1988) #138
Best Available

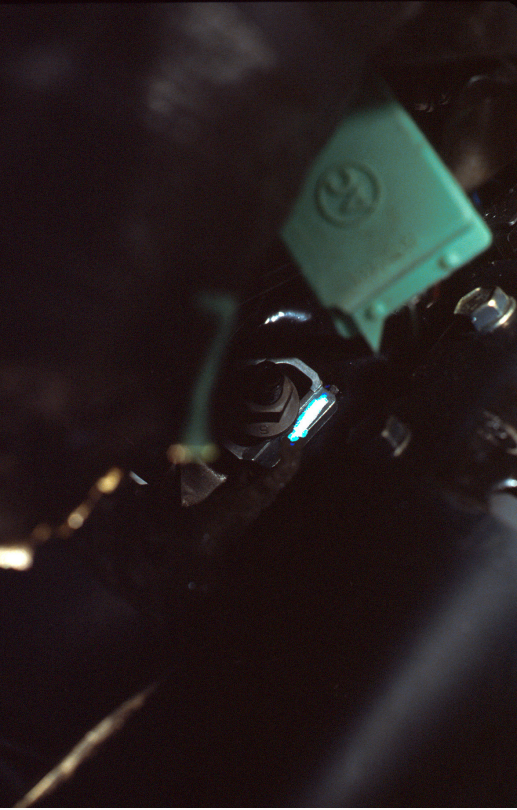

PSU 12-082A (1988) #139
Best Available

PSU 12-082A (1988) #140

PSU 12-082A (1988) #141

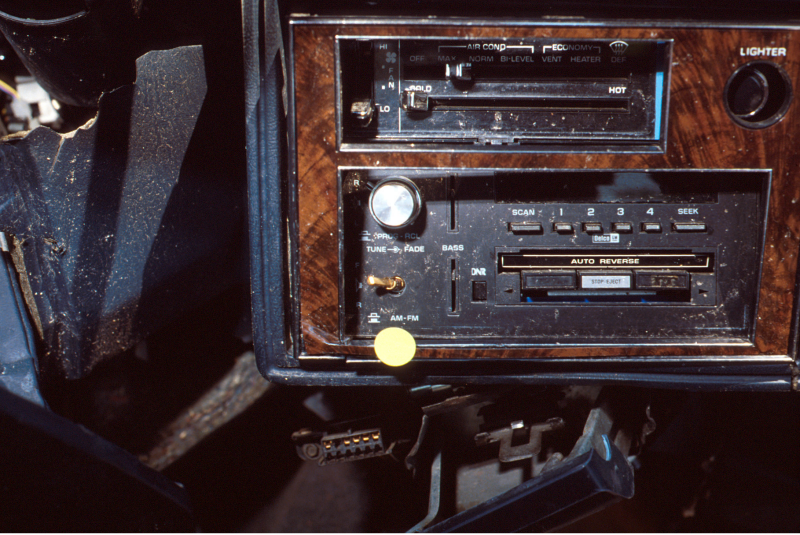

PSU 12-082A (1988) #142

PSU 12-082A (1988) #143

PSU 12-082A (1988) #144

PSU 12-082A (1988) #145

PSU 12-082A (1988) #146

PSU 12-082A (1988) #147

PSU 12-082A (1988) #148

PSU 12-082A (1988) #149

PSU 12-082A (1988) #150

PSU 12-082A (1988) #151

PSU 12-082A (1988) #152

PSU 12-082A (1988) #153

PSU 12-082A (1988) #154

PSU 12-082A (1988) #155

PSU 12-082A (1988) #156

PSU 12-082A (1988) #157

PSU 12-082A (1988) #158

PSU 12-082A (1988) #159

PSU 12-082A (1988) #160

PSU 12-082A (1988) #161

PSU 12-082A (1988) #162

PSU 12-082A (1988) #163

PSU 12-082A (1988) #164