400 Seventh Street, S.W.
Washington, D.C. 20590

U.S. Department
of Transportation

**National Highway
Traffic Safety
Administration**

Dear Crash Data Researchers/Users:

Thank you for choosing crash data from the National Highway Traffic Safety Administration (NHTSA) for your research or other use. The information contained in this motor vehicle crash report is collected, maintained and distributed in accordance with Public Law 89-564. In accordance with this Public Law, NHTSA is required not to release any case information until completion of quality control procedures. These procedures include a review of the case material to extract all names, licenses and registration numbers, non-coded interview material, non-research related researcher comments in the margins, non-factual data, and the production number portion of the vehicle identification number (VIN).

If you requested NHTSA to query its database files in order to identify a specific crash, then that query was made using non-personal descriptors you provided for use in our search. This motor vehicle crash may have been identified from a data search and matches the general, non-personal descriptors you provided, but we cannot confirm that this is the specific crash report you requested.

If you have any questions with regard to the above procedures, please contact the Field Operations Branch, Crash Investigation Division, National Center for Statistics and Analysis at 202-366-4820. Again, please be advised that we cannot confirm that this is the case that you have specifically requested nor can we certify the information to be correct.

*** *** ***

Get it together!
SAFETY BELTS SAVE LIVES

AUTO SAFETY HOTLINE
(800) 424-9393
Wash. D.C. Area 366-0123

U.S. Department of Transportation
National Highway Traffic Safety Administration

CASE SUMMARY

NATIONAL ACCIDENT SAMPLING SYSTEM
CRASHWORTHINESS DATA SYSTEM

PSU 05 CASE NO. 152F TYPE OF ACCIDENT Vehicle to vehicle rearend w/rollover

A. DESCRIPTION OF THE ACCIDENT SEQUENCE AND ACCIDENT PECULIARITIES

(Provide a summary of the accident sequence as well as any particular event of the accident that is noteworthy. Injury mechanism and vehicle crashworthiness is the focus, not driver culpability. Do not include any personal identifiers. Use reverse side if needed.)

V1 was travelling east on a two lane divided roadway. V2 was stopped for traffic ahead of V1. V1 struck the rear of V2. It rotated clockwise and rolled over. It contacted a tree during rollover sequence.

B. VEHICLE PROFILE(S)

Vehicle No.	Class of Vehicle	Year/Make/Model	Most Severe Damage		Component Failure
			Damage Plane	Severity Description	
1	Subcompact	77 Volkswagen Rabbit	Top	Severe	Door failure
2	Subcompact	80 SAAB 900 GLE	Rear	Unknown	Unknown

C. PERSON PROFILE(S)

Vehicle No.	Person Role	Seat Position	Restraint Use	Most Severe Injury			
				Body Region	Lesion	AIS	Injury Source
1	driver	Left front	None	Chin	Laceration	1	Left side hardware

DO NOT SANITIZE THIS FORM

U.S. Department of Transportation
National Highway Traffic Safety Administration

NATIONAL ACCIDENT SAMPLING SYSTEM
CRASHWORTHINESS DATA SYSTEM

ACCIDENT COLLISION DIAGRAM

BEST AVAILABLE

PSU No. 05

Case Number – Stratum 1 5 2 F

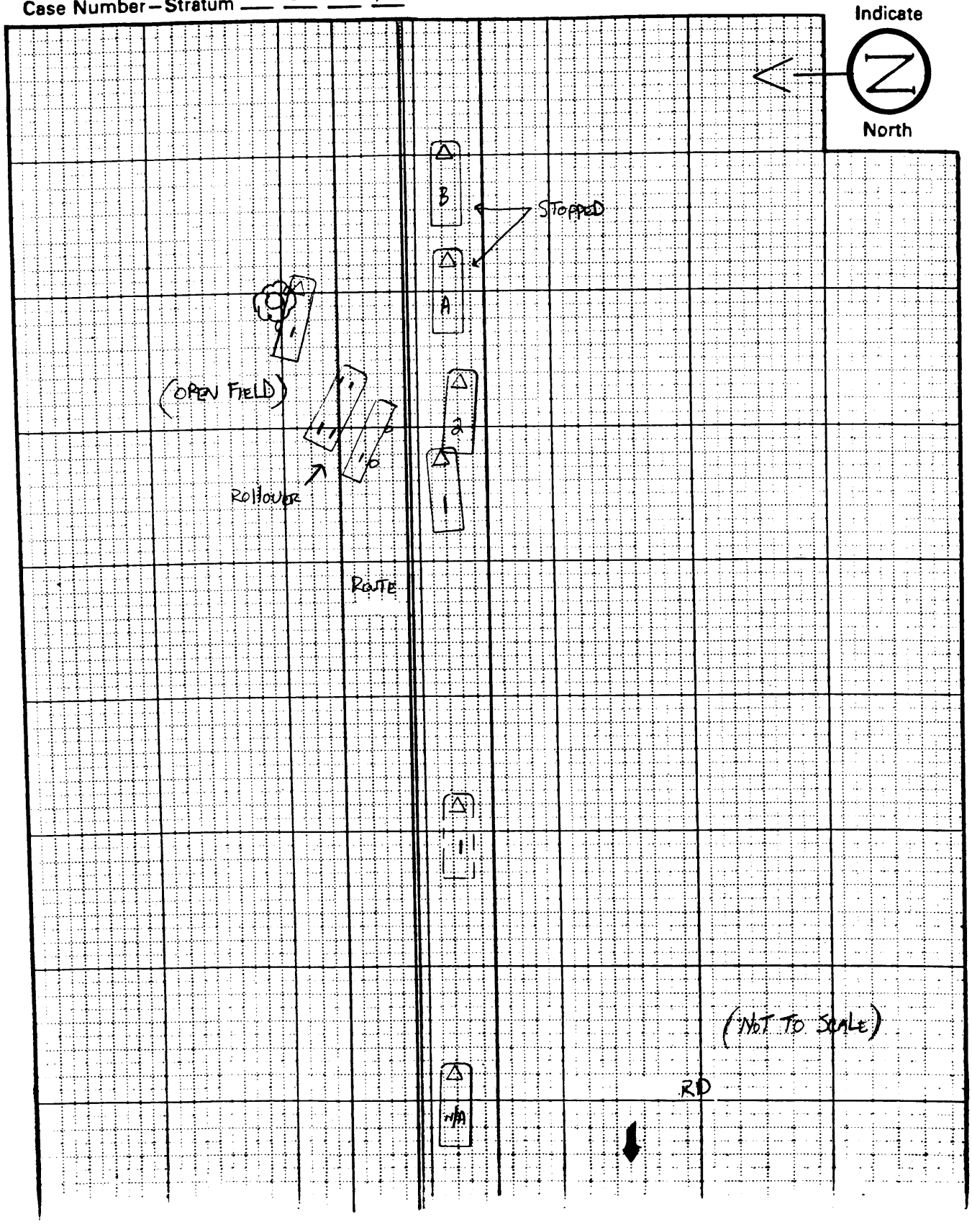

U.S. Department of Transportation
National Highway Traffic Safety Administration

ACCIDENT COLLISION MEASUREMENT TABLE

NATIONAL ACCIDENT SAMPLING SYSTEM
CRASHWORTHINESS DATA SYSTEM

Primary Sampling Unit Number 05 Case Number–Stratum 152 F

ACCIDENT COLLISION DIAGRAM

LEVEL I
PHYSICAL EVIDENCE ABSENT

To be accomplished when there is no physical evidence present at the scene:

- approximate vehicle orientation at impact and final rest
- applicable road/roadway delineation (e.g., curbs/edge lines, lane markings, median markings, pavement markings, etc.)
- applicable traffic controls (e.g., speed limit)
- north arrow placed on diagram
- sketch required

LEVEL II
PHYSICAL EVIDENCE PRESENT

In addition to the level I tasks noted above, the following must be accomplished when physical evidence is present:

- document reference point and reference line relative to physical features present at the scene
- scale documentation of all accident induced physical evidence
- scaled documentation of all roadside objects contacted
- roadway surface type and condition of applicable roadways
- grade measurements for all applicable roadways and at location of rollover initiation
- scaled representations of the vehicle(s) at pre-impact, impact, and final rest based upon either:
  - a) physical evidence, or
  - b) reconstructed accident dynamics

CRASH DATA

	VEH. #1	VEH. #2	VEH. #3
Heading Angle			
Surface Type			
Surface Condition			
Grade (v/h) Measurement (between impact and final rest)			
Grade (v/h) Measurement (at location of rollover initiation)			

Reference Point: _____ Reference line: _____

Item	Distance and Direction from Reference Point	Distance and Direction from Reference Line
LEVEL I SCENE DOCUMENTATION		

HS Form 431A (1/92)

Item	Distance and Direction from Reference Point	Distance and Direction from Reference Line

U.S. Department of Transportation

National Highway Traffic Safety Administration

ACCIDENT FORM

NATIONAL ACCIDENT SAMPLING SYSTEM
CRASHWORTHINESS DATA SYSTEM

1. Primary Sampling Unit Number: 05
2. Case Number - Stratum: 152 F

IDENTIFICATION

3. Number of General Vehicle Forms Submitted: 02
4. Date of Accident (Month,Day,Year): __/__/92
5. Time of Accident: 0735

Code reported military time of accident.

NOTE: Midnight = 2400
Unknown = 9999

SPECIAL STUDIES - INDICATORS

Check (✓) each special study (SS12-SS16 below) that has been completed; code 1 for the checked special studies and 0 for the special studies not checked.

6. ___SS12 Not Active: 0
7. ___SS13 Not Active: 0
8. ___SS14 Fatal AOPS: 0
9. ___SS15 _____: 0
10. ___SS16 _____: 0

NUMBER OF EVENTS

11. Number of Recorded Events in This Accident: 03

Code the number of events which occurred in this accident.

ACCIDENT EVENTS

For each event that occurred in the accident, code the lowest numbered vehicle in the left columns and the other involved vehicle or object on the right.

Accident Event Sequence Number	Vehicle Number	Class Of Vehicle	General Area of Damage	Vehicle Number or Object Contacted	Class Of Vehicle	General Area of Damage
12. 01	13. 01	14. 01	15. F	16. 02	17. 01	18. B
19. 02	20. 01	21. 01	22. T	23. 31	24. 00	25. N
26. 03	27. 01	28. 01	29. R	30. 42	31. 00	32. 0
33. 04	34.	35.	36.	37.	38.	39.
40. 05	41.	42.	43.	44.	45.	46.

IF GREATER THAN FIVE EVENTS, CONTINUE CODING ON THE ACCIDENT EVENT SUPPLEMENT

CODES FOR CLASS OF VEHICLE

(00) Not a motor vehicle
(01) Subcompact/mini (wheelbase < 100 inches)
(02) Compact (wheelbase = 100 — 104 inches)
(03) Intermediate (wheelbase = 105 — 109 inches)
(04) Full size (wheelbase = 110 — 114 inches)
(05) Largest (wheelbase ≥ 115 inches)
(09) Unknown passenger car size
(11) Compact utility vehicle
(12) Large utility vehicle (≤ 10,000 lbs GVWR)
(13) Passenger van (≤ 10,000 lbs GVWR)
(14) Other van (≤ 10,000 lbs GVWR)
(15) Pickup truck (≤ 10,000 lbs GVWR)
(18) Other truck (≤ 10,000 lbs GVWR)
(19) Unknown light truck type
(20) School bus
(21) Other bus
(22) Truck (> 10,000 lbs GVWR)
(23) Tractor without trailer
(24) Tractor-trailer(s)
(25) Motored cycle
(28) Other vehicle
(99) Unknown

CODES FOR GENERAL AREA OF DAMAGE (GAD)

CDS APPLICABLE AND OTHER VEHICLES

(0) Not a motor vehicle
(N) Noncollision
(F) Front
(R) Right side
(L) Left side
(B) Back
(T) Top
(U) Undercarriage
(9) Unknown

TDC APPLICABLE VEHICLES

(0) Not a motor vehicle
(N) Noncollision
(F) Front
(R) Right side
(L) Left side
(B) Back of unit with cargo area (rear of trailer or straight truck)
(D) Back (rear of tractor)
(C) Rear of cab
(V) Front of cargo area
(T) Top
(U) Undercarriage
(9) Unknown

CODES FOR VEHICLE NUMBER OR OBJECT CONTACTED

(01-30) — Vehicle Number

Noncollision
(31) Overturn — rollover
(32) Fire or explosion
(33) Jackknife
(34) Other intraunit damage (specify): _____
(35) Noncollision injury
(38) Other noncollision (specify): _____
(39) Noncollision — details unknown

Collision With Fixed Object
(41) Tree (≤ 4 inches in diameter)
(42) Tree (> 4 inches in diameter)
(43) Shrubbery or bush
(44) Embankment
(45) Breakaway pole or post (any diameter)

Nonbreakaway Pole or Post
(50) Pole or post (≤ 4 inches in diameter)
(51) Pole or post (> 4 inches but ≤ 12 inches in diameter)
(52) Pole or post (> 12 inches in diameter)
(53) Pole or post (diameter unknown)
(54) Concrete traffic barrier
(55) Impact attenuator
(56) Other traffic barrier (includes guardrail) (specify): _____
(57) Fence
(58) Wall
(59) Building
(60) Ditch or culvert
(61) Ground
(62) Fire hydrant
(63) Curb
(64) Bridge
(68) Other fixed object (specify): _____
(69) Unknown fixed object

Collision with Nonfixed Object
(71) Motor vehicle not in-transport
(72) Pedestrian
(73) Cyclist or cycle
(74) Other nonmotorist or conveyance _____
(75) Vehicle occupant
(76) Animal
(77) Train
(78) Trailer, disconnected in transport
(88) Other nonfixed object (specify): _____
(89) Unknown nonfixed object

(98) Other event (specify): _____
(99) Unknown event or object

PSU 05-152F V-01

OCCUPANT RELATED

16. Driver Presence in Vehicle: 1
    (0) Driver not present
    (1) Driver present
    (9) Unknown

17. Number of Occupants This Vehicle: 01
    (00-96) Code actual number of occupants for this vehicle
    (97) 97 or more
    (99) Unknown

18. Number of Occupant Forms Submitted: 01

VEHICLE WEIGHT ITEMS

19. Vehicle Curb Weight: 01,900
    1860 Code weight to nearest 100 pounds.
    (010) Less than 1050 pounds
    (135) 13,500 pounds or more
    (999) Unknown

    Source: _____

20. Vehicle Cargo Weight: 0,000
    ____ Code weight to nearest 100 pounds.
    (00) Less than 50 pounds
    (97) 9,650 pounds or more
    (99) Unknown

RECONSTRUCTION DATA

21. Towed Trailing Unit: 0
    (0) No towed unit
    (1) Yes—towed trailing unit
    (9) Unknown

22. Documentation of Trajectory Data for This Vehicle: 0
    (0) No
    (1) Yes

23. Post Collision Condition of Tree or Pole (For Highest Delta V): 0
    (0) Not collision (for highest delta V) with tree or pole
    (1) Not damaged
    (2) Cracked/sheared
    (3) Tilted <45 degrees
    (4) Tilted ≥45 degrees
    (5) Uprooted tree
    (6) Separated pole from base
    (7) Pole replaced
    (8) Other (specify):

    (9) Unknown

24. Rollover: 4
    (0) No rollover (no overturning)

    Rollover (primarily about the longitudinal axis)
    (1) Rollover, 1 quarter turn only
    (2) Rollover, 2 quarter turns
    (3) Rollover, 3 quarter turns
    (4) Rollover, 4 or more quarter turns (specify): PER INTERVIEW & DAMAGE

    (5) Rollover--end-over-end (i.e., primarily about the lateral axis)
    (9) Rollover (overturn), details unknown

OVERRIDE/UNDERRIDE (THIS VEHICLE)

25. Front Override/Underride (this Vehicle): 98

26. Rear Override/Underride (this Vehicle): 0

    (0) No override/underride, or not an end-to-end impact

    Override (see specific CDC)
    (1) 1st CDC
    (2) 2nd CDC
    (3) Other not automated CDC (specify):

    Underride (see specific CDC)
    (4) 1st CDC
    (5) 2nd CDC
    (6) Other not automated CDC (specify):

    (7) Medium/heavy truck or bus override
    (9) Unknown

HEADING ANGLE AT IMPACT FOR HIGHEST DELTA V

Values: (000)-(359) Code actual value
(997) Noncollision
(998) Impact with object
(999) Unknown

27. Heading Angle For This Vehicle: 997

28. Heading Angle For Other Vehicle: 997

PSU 05-152F V-01

Category	Configuration	ACCIDENT TYPES (Includes Intent)
I. Single Driver	A. Right Roadside Departure	01 DRIVE OFF ROAD; 02 CONTROL/ TRACTION LOSS; 03 AVOID COLLISION WITH VEH., PED., ANIM.; 04 SPECIFICS OTHER; 05 SPECIFICS UNKNOWN
	B. Left Roadside Departure	06 DRIVE OFF ROAD; 07 CONTROL/ TRACTION LOSS; 08 AVOID COLLISION WITH VEH., PED., ANIM.; 09 SPECIFICS OTHER; 10 SPECIFICS UNKNOWN
	C. Forward Impact	11 PARKED VEH.; 12 STA. OBJECT; 13 PEDESTRIAN/ ANIMAL; 14 END DEPARTURE; 15 SPECIFICS OTHER; 16 SPECIFICS UNKNOWN
II. Same Trafficway Same Direction	D. Rear-End	20, 21, 22, 23 STOPPED 21, 22, 23; 24, 25, 26, 27 SLOWER 25, 26, 27; 28, 29, 30, 31 DECEL. 29, 30, 31; (EACH • 32) SPECIFICS OTHER; (EACH • 33) SPECIFICS UNKNOWN
	E. Forward Impact	34, 35 CONTROL/ TRACTION LOSS; 36, 37 CONTROL/ TRACTION LOSS; 38, 39 AVOID COLLISION WITH VEH.; 40, 41 AVOID COLLISION WITH OBJECT; (EACH • 42) SPECIFICS OTHER; (EACH • 43) SPECIFICS UNKNOWN
	F. Sideswipe Angle	44, 45, 46, 47; (EACH • 48) SPECIFICS OTHER; (EACH • 49) SPECIFICS UNKNOWN
III. Same Trafficway Opposite Direction	G. Head-On	50, 51 LATERAL MOVE; (EACH • 52) SPECIFICS OTHER; (EACH • 53) SPECIFICS UNKNOWN
	H. Forward Impact	54, 55 CONTROL/ TRACTION LOSS; 56, 57 CONTROL/ TRACTION LOSS; 58, 59 AVOID COLLISION WITH VEH.; 60, 61 AVOID COLLISION WITH OBJECT; (EACH • 62) SPECIFICS OTHER; (EACH • 63) SPECIFICS UNKNOWN
	I. Sideswipe/ Angle	64, 65 LATERAL MOVE; (EACH • 66) SPECIFICS OTHER; (EACH • 67) SPECIFICS UNKNOWN
IV. Change Trafficway Vehicle Turning	J. Turn Across Path	68, 69 INITIAL OPPOSITE DIRECTIONS; 70, 71, 72, 73 INITIAL SAME DIRECTIONS; (EACH • 74) SPECIFICS OTHER; (EACH • 75) SPECIFICS UNKNOWN
	K. Turn Into Path	76, 77 TURN INTO SAME DIRECTION; 78, 79 TURN INTO SAME DIRECTION; 80, 81 TURN INTO OPPOSITE DIRECTIONS; 82, 83 TURN INTO OPPOSITE DIRECTIONS; (EACH • 84) SPECIFICS OTHER; (EACH • 85) SPECIFICS UNKNOWN
V. Intersecting Paths (Vehicle Damage)	L. Straight Paths	86, 87; 88, 89; (EACH • 90) SPECIFICS OTHER; (EACH • 91) SPECIFICS UNKNOWN
VI. Miscellaneous	M. Backing Etc.	92 BACKING VEH.; 93 OTHER VEH. OR OBJECT; 98 Other Accident Type; 99 Unknown Accident Type; 00 No Impact

PSU 05-152F V-01

OTHER DATA

56. Driver's Zip Code ____ ____ ____ ____ ____

(00000) Driver not present
(00001) Driver not a resident of U.S. or territories
_____ Code actual 5-digit zip code
(99999) Unknown

57. Driver's Race/Ethnic Origin 1
(0) Driver not present
(1) White (non-Hispanic)
(2) Black (non-Hispanic)
(3) White (Hispanic)
(4) Black (Hispanic)
(5) American Indian, Eskimo or Aleut
(6) Asian or Pacific Islander
(8) Other (specify):
_____
(9) Unknown

58. Vehicle Special Use (This Trip) 0
(0) No special use
(1) Taxi
(2) Vehicle used as school bus
(3) Vehicle used as other bus
(4) Military
(5) Police
(6) Ambulance
(7) Hearse
(8) Fire truck or car
(9) Unknown

ROLLOVER DATA

If GV07 (Body Type) ≠ 1-49, leave GV59-GV63 blank.
If GV24 (Rollover) = 0, then GV59-GV63 must equal 0.
If GV24 = 9, then GV59-GV63 must equal 9.

59. Rollover Initiation Type 3
(0) No rollover
(1) Trip-over
(2) Flip-over
(3) Turn-over
(4) Climb-over
(5) Fall-over
(6) Bounce-over
(7) Collision with another vehicle
(8) Other rollover initiation type specify):
_____
(9) Unknown rollover initiation type

60. Location of Rollover Initiation 1
(0) No rollover
(1) On roadway
(2) On shoulder—paved
(3) On shoulder—unpaved
(4) On roadside or divided trafficway median
(9) Unknown

61. Rollover Initiation Object Contacted 31

62. Location on Vehicle Where Initial Principal Tripping Force Is Applied 8X
(0) No rollover
(1) Wheels/tires
(2) Side plane
(3) End plane
(4) Undercarriage
(5) Other location on vehicle (specify):
_____
(8) Non-contact rollover forces (specify):
_____
(9) Unknown

63. Direction of Initial Roll 2
(0) No rollover
(1) Roll right - primarily about the longitudinal axis
(2) Roll left - primarily about the longitudinal axis
(5) End-over-end (i.e., primarily about the lateral axis)
(9) Unknown roll direction

PRECRASH DATA

64. Pre-Event Movement (Prior to Recognition of Critical Event) 01
(01) Going straight
(02) Slowing or stopping in traffic lane
(03) Starting in traffic lane
(04) Stopped in traffic lane
(05) Passing or overtaking another vehicle
(06) Disabled or parked in travel lane
(07) Leaving a parking position
(08) Entering a parking position
(09) Turning right
(10) Turning left
(11) Making a U-turn
(12) Backing up (other than for parking position)
(13) Negotiating a curve
(14) Changing lanes
(15) Merging
(16) Successful avoidance maneuver to a previous critical event
(97) Other (specify):
_____
(98) No driver present
(99) Unknown

PSU 05-152F V-01

CODES FOR ROLLOVER INITIATION OBJECT CONTACTED

(00) No rollover
(01-30) — Vehicle Number

Noncollision
(31) Turn-over — fall-over
(33) Jackknife

Collision With Fixed Object
(41) Tree (≤ 4 inches in diameter)
(42) Tree (> 4 inches in diameter)
(43) Shrubbery or bush
(44) Embankment

(45) Breakaway pole or post (any diameter)

Nonbreakaway Pole or Post
(50) Pole or post (≤ 4 inches in diameter)
(51) Pole or post (> 4 inches but ≤ 12 inches in diameter)
(52) Pole or post (> 12 inches in diameter)
(53) Pole or post (diameter unknown)

(54) Concrete traffic barrier
(55) Impact attenuator
(56) Other traffic barrier (includes guardrail) (specify):_____

(57) Fence
(58) Wall
(59) Building
(60) Ditch or culvert
(61) Ground
(62) Fire hydrant
(63) Curb
(64) Bridge
(68) Other fixed object (specify):

_____

(69) Unknown fixed object

Collision with Nonfixed Object
(71) Motor vehicle not in-transport
(76) Animal
(77) Train
(78) Trailer, disconnected in transport
(88) Other nonfixed object (specify):

_____

(89) Unknown nonfixed object

(98) Other event (specify):

_____

(99) Unknown event or object

U.S. Department of Transportation
National Highway Traffic Safety Administration

EXTERIOR VEHICLE FORM

NATIONAL ACCIDENT SAMPLING SYSTEM
CRASHWORTHINESS DATA SYSTEM

1. Primary Sampling Unit Number: 05
2. Case Number - Stratum: 152 F
3. Vehicle Number: 01

VEHICLE IDENTIFICATION

VIN: 17731375611 Model Year: 77

Vehicle Make (specify): VOLKSWAGON Vehicle Model (specify): RABBIT

LOCATOR

Locate the end of the damage with respect to the vehicle longitudinal center line or bumper corner for end impacts or an undamaged axle for side impacts.

Specific Impact No.	Location of Direct Damage	Location of Field L
1	25½" REAR FRONT AXLE	SAME
2	N/A	N/A
3	STARTS (L) FRONT BUMPER	STARTS (R) FRONT BUMPER

CRUSH PROFILE

NOTES: Identify the plane at which the C-measurements are taken (e.g., at bumper, above bumper, at sill, above sill, etc.) and label adjustments (e.g., free space).

Measure and document on the vehicle diagram the location of maximum crush.

Measure C1 to C6 from driver to passenger side in front or rear impacts and rear to front in side impacts. BACK STRINGLINE 4" FORWARD BACK BUMPER

Free space value is defined as the distance between the baseline and the original body contour taken at the individual C locations. This may include the following: bumper lead, bumper taper, side protrusion, side taper, etc. Record the value for each C-measurement and maximum crush.

Use as many lines/columns as necessary to describe each damage profile.

Specific Impact Number	Plane of Impact C-Measurements	Direct Damage		Field L	C_1	C_2	C_3	C_4	C_5	C_6	±D
		Width (CDC)	Max Crush								
3	FRONT BUMPER	—	↓	—	7	11½	17¾	15½	14	13	—
—	FREE SPACE	—	↓	—	1½	½	0	0	½	1½	—
*	CRUSH	33	19¾	50½	5½	11	17¾	15½	13½	11½	+11.25
2	ROOF	—	13½"	—							
1	TREE	25½"	18½"	—							
	(RIGHT SIDE)										

VEHICLE DAMAGE SKETCH

TIRE—WHEEL DAMAGE

	a. Rotation physically restricted	b. Tire deflated
RF	2	2
LF	1	1
RR	2	2
LR	1	1

(1) Yes (2) No (8) NA (9) Unk.

TYPE OF TRANSMISSION

☑ Manual ☐ Automatic

ORIGINAL SPECIFICATIONS

Wheelbase	94.5
Overall Length	155.3
Maximum Width	63.4
Curb Weight	1860
Average Track	54½
Front Overhang	
Rear Overhang	
Engine Size: cyl./displ.	4CH
Undeformed End Width	55½

WHEEL STEER ANGLES

(For locked front wheels or displaced rear axles only)

RF ± NA °
LF ± 05 °
RR ± NA °
LR ± 00 °

Within ± 5 degrees

DRIVE WHEELS

☐ FWD ☒ RWD ☐ 4WD

Approximate Cargo Weight 000

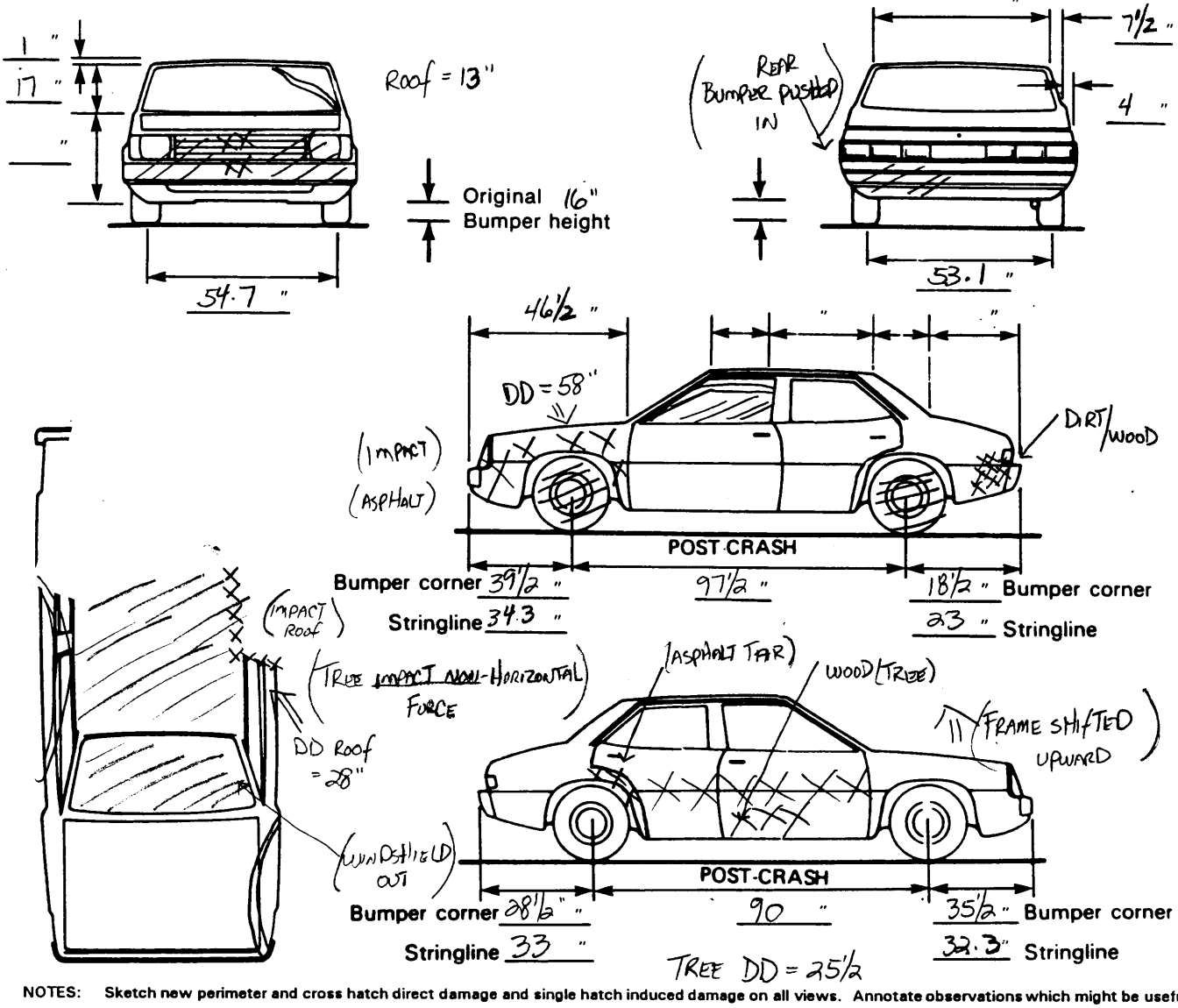

NOTES: Sketch new perimeter and cross hatch direct damage and single hatch induced damage on all views. Annotate observations which might be useful in reconstructing the accident (e.g., grass in tire bead, direction of striations, scuff on sidewalls, etc.). If pulling trailer, sketch type of trailer and damage received on the back of this page.

ASPHALT = 76½"

Annotate any damage caused by extrication such as component removal by torching, prying, or hydraulic shears.

CDC WORKSHEET

CODES FOR OBJECT CONTACTED

(01-30) — Vehicle Number

Noncollision
- (31) Overturn — rollover
- (32) Fire or explosion
- (33) Jackknife
- (34) Other intraunit damage (specify): _____
- (35) Noncollision injury
- (38) Other noncollision (specify): _____
- (39) Noncollision — details unknown

Collision With Fixed Object
- (41) Tree (≤ 4 inches in diameter)
- (42) Tree (> 4 inches in diameter)
- (43) Shrubbery or bush
- (44) Embankment
- (45) Breakaway pole or post (any diameter)

Nonbreakaway Pole or Post
- (50) Pole or post (≤ 4 inches in diameter)
- (51) Pole or post (> 4 inches but ≤ 12 inches in diameter)
- (52) Pole or post (> 12 inches in diameter)
- (53) Pole or post (diameter unknown)
- (54) Concrete traffic barrier
- (55) Impact attenuator
- (56) Other traffic barrier (includes guardrail) (specify): _____
- (57) Fence
- (58) Wall
- (59) Building
- (60) Ditch or culvert
- (61) Ground
- (62) Fire hydrant
- (63) Curb
- (64) Bridge
- (68) Other fixed object (specify): _____
- (69) Unknown fixed object

Collision with Nonfixed Object
- (71) Motor vehicle not in-transport
- (72) Pedestrian
- (73) Cyclist or cycle
- (74) Other nonmotorist or conveyance
- (75) Vehicle occupant
- (76) Animal
- (77) Train
- (78) Trailer, disconnected in transport
- (88) Other nonfixed object (specify): _____
- (89) Unknown nonfixed object
- (98) Other event (specify): _____
- (99) Unknown event or object

DEFORMATION CLASSIFICATION BY EVENT NUMBER

Accident Event Sequence Number	Object Contacted	(1) (2) Direction of Force (degrees)	Incremental Value of Shift	(3) Deformation Location	(4) Specific Longitudinal or Lateral Location	(5) Specific Vertical or Lateral Location	(6) Type of Damage Distribution	(7) Deformation Extent
01	02	360	--	F	Y	E	W	02
02	31	000	00	T	D	D	O	05
03	42	000	(--)	U	P	E	W	03

U.S. Department of Transportation
National Highway Traffic Safety Administration

INTERIOR VEHICLE FORM

NATIONAL ACCIDENT SAMPLING SYSTEM
CRASHWORTHINESS DATA SYSTEM

1. Primary Sampling Unit Number: 05
2. Case Number - Stratum: 152 F
3. Vehicle Number: 01

INTEGRITY

4. Passenger Compartment Integrity: 98

(00) No integrity loss

Yes, Integrity Was Lost Through
(01) Windshield
(02) Door (side)
(03) Door/hatch (back door)
(04) Roof
(05) Roof glass
(06) Side window
(07) Rear window (backlight)
(08) Roof and roof glass
(09) Windshield and door (side)
(10) Windshield and roof
(11) Side and rear window (side window and backlight)
(12) Windshield and side window
(13) Door and side window
(98) Other combination of above (specify): 06 & 09
(99) Unknown

Door, Tailgate or Hatch Opening

5. LF 2 6. RF 2 7. LR 0 8. RR 0 9. TG/H 1

(0) No door/gate/hatch
(1) Door/gate/hatch remained closed and operational
(2) Door/gate/hatch came open during collision
(3) Door/gate/hatch jammed shut
(8) Other (specify):
(9) Unknown

Damage/Failure Associated with Door, Tailgate or Hatch Opening in Collision. If IV05-IV09 ≠ 2, Then code Ø

10. LF 4 11. RF 6 12. LR 0 13. RR 0 14. TG/H 0

(0) No door/gate/hatch or door not opened

Door, Tailgate or Hatch Came Open During Collision
(1) Door operational (no damage)
(2) Latch/striker failure due to damage
(3) Hinge failure due to damage
(4) Door structure failure due to damage
(5) Door support (i.e., pillar, sill, roof side rail, etc.) failure due to damage
(6) Latch/striker and hinge failure due to damage
(8) Other failure (specify):
(9) Unknown

GLAZING

Glazing Damage from Impact Forces

15. WS 4 16. LF 6 17. RF 0 18. LR 6 19. RR 0
20. BL 0 21. Roof 8 22. Other 0

(0) No glazing damage from impact forces
(2) Glazing in place and cracked from impact forces
(3) Glazing in place and holed from impact forces
(4) Glazing out-of-place (cracked or not) and not holed from impact forces
(5) Glazing out-of-place and holed from impact forces
(6) Glazing disintegrated from impact forces
(7) Glazing removed prior to accident
(8) No glazing
(9) Unknown if damaged

Glazing Damage from Occupant Contact

23. WS 0 24. LF 0 25. RF 0 26. LR 0 27. RR 0
28. BL 0 29. Roof 0 30. Other 0

(0) No occupant contact to glazing or no glazing
(1) Glazing contacted by occupant but no glazing damage
(2) Glazing in place and cracked by occupant contact
(3) Glazing in place and holed by occupant contact
(4) Glazing out-of-place (cracked or not) by occupant contact and not holed by occupant contact
(5) Glazing out-of-place by occupant contact and holed by occupant contact
(6) Glazing disintegrated by occupant contact
(9) Unknown if contacted by occupant

If No Glazing Damage ***And*** No Occupant Contact or No Glazing, Then Code IV31 Through IV46 As Ø

Type of Window/Windshield Glazing

31. WS 1 32. LF 2 33. RF 0 34. LR 2 35. RR 0
36. BL 0 37. Roof 0 38. Other 0

(0) No glazing contact and no damage, or no glazing
(1) AS-1 — Laminated
(2) AS-2 — Tempered
(3) AS-3 — Tempered-tinted
(4) AS-14 — Glass/Plastic
(8) Other (specify):
(9) Unknown

Window Precrash Glazing Status

39. WS 1 40. LF 3 41. RF 0 42. LR 1 43. RR 0
44. BL 0 45. Roof 0 46. Other 0

(0) No glazing contact and no damage, or no glazing
(1) Fixed
(2) Closed
(3) Partially opened
(4) Fully opened
(9) Unknown

INTRUSION WORKSHEET

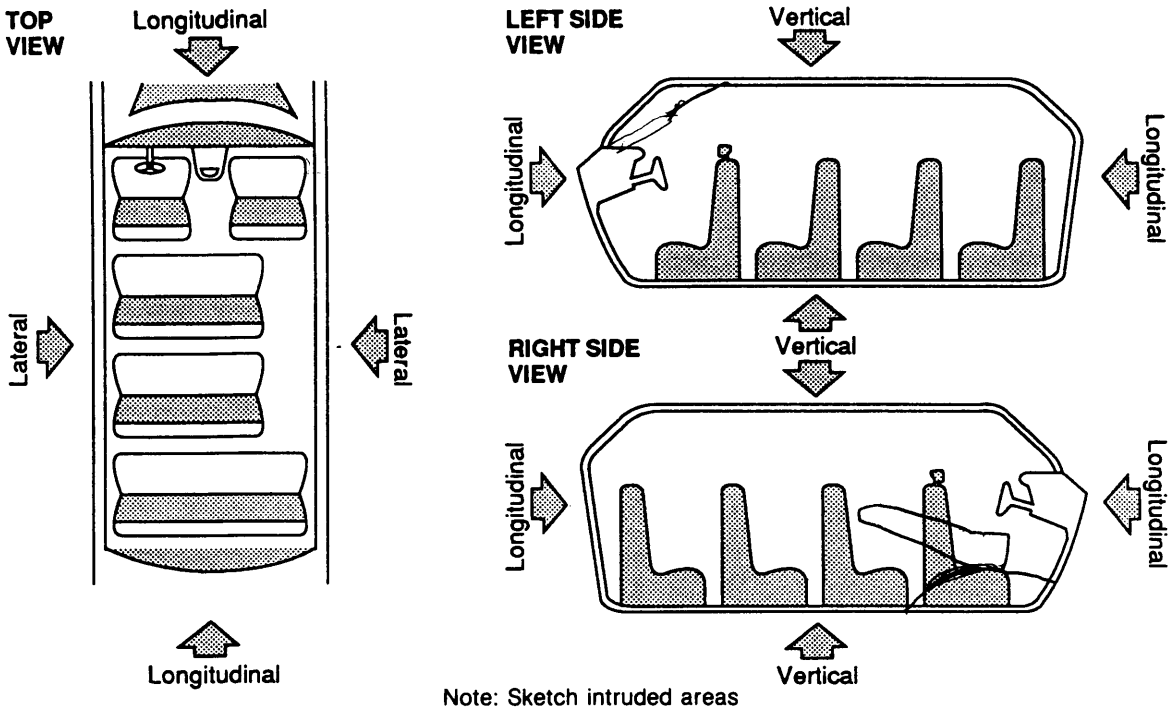

Note: Sketch intruded areas

LOCATION OF INTRUSION	INTRUDED COMPONENT	COMPARISON VALUE	–	INTRUDED VALUE	=	INTRUSION	DOMINANT CRUSH DIRECTION
11	A Pillar	27"	–	22 Top of A Pillar	=	5"	Long
11	Roof	33"	–	23 to seat	=	10" ✓	Vert
12	Roof	33"	–	27 to seat	=	6" ✓	Vert
23	Seat back	28	–	20	=	8" ✓	Long.
13	Floor	—	–	—	=	15 ✓	Vert
			–		=		
			–		=		
			–		=		
			–		=		
			–		=		
			–		=		
			–		=		
			–		=		
			–		=		
			–		=		

Document no more than the 15 most severe intrusions

OCCUPANT AREA INTRUSION

Note: If no intrusions, leave variables IV47-IV86 blank.

	Location of Intrusion	Intruding Component	Magnitude of Intrusion	Dominant Crush Direction
1st	47. 13	48. 17	49. 4	50. 1
2nd	51. 23	52. 19	53. 3	54. 2
3rd	55. 11	56. 12	57. 3	58. 1
4th	59. 12	60. 12	61. 2	62. 1
5th	63. 11	64. 06	65. 2	66. 21
6th	67. 11	68. 15	69. 2	70. 1
7th	71.	72.	73.	74.
8th	75.	76.	77.	78.
9th	79.	80.	81.	82.
10th	83.	84.	85.	86.

NASS CODING CHANGE
1st Review: 1G
2nd Review:

LOCATION OF INTRUSION

Front Seat
(11) Left
(12) Middle
(13) Right

Second Seat
(21) Left
(22) Middle
(23) Right

Third Seat
(31) Left
(32) Middle
(33) Right

Fourth Seat
(41) Left
(42) Middle
(43) Right

(97) Catastrophic
(98) Other enclosed area (specify) _____
(99) Unknown

INTRUDING COMPONENT

Interior Components
(01) Steering assembly
(02) Instrument panel left
(03) Instrument panel center
(04) Instrument panel right
(05) Toe pan
(06) A-pillar
(07) B-pillar
(08) C-pillar
(09) D-pillar
(10) Door panel (side)
(12) Roof (or convertible top)
(13) Roof side rail
(14) Windshield
(15) Windshield header
(16) Window frame
(17) Floor pan (includes sill)
(18) Backlight header
(19) Front seat back
(20) Second seat back
(21) Third seat back
(22) Fourth seat back
(23) Fifth seat back
(24) Seat cushion
(25) Back door/panel (e.g., tailgate)
(26) Other interior component (specify): _____
(27) Side panel - forward of the A-pillar
(28) Side panel - rear of the A-pillar

Exterior Components
(30) Hood
(31) Outside surface of this vehicle (specify): _____
(32) Other exterior object in the environment (specify): _____
(33) Unknown exterior object
(97) Catastrophic
(98) Intrusion of unlisted component(s) (specify): _____
(99) Unknown

MAGNITUDE OF INTRUSION
(1) ≥ 1 inch but < 3 inches
(2) ≥ 3 inches but < 6 inches
(3) ≥ 6 inches but < 12 inches
(4) ≥ 12 inches but < 18 inches
(5) ≥ 18 inches but < 24 inches
(6) ≥ 24 inches
(7) Catastrophic
(9) Unknown

DOMINANT CRUSH DIRECTION
(1) Vertical
(2) Longitudinal
(3) Lateral
(7) Catastrophic
(9) Unknown

STEERING RIM/SPOKE DEFORMATION

COMPARISON VALUE	—	DAMAGE VALUE	=	DEFORMATION
	—		=	
	—		=	
	—		=	
	—		=	

STEERING COLUMN

87. Steering Column Type — 1
(1) Fixed column
(2) Tilt column
(3) Telescoping column
(4) Tilt and telescoping column
(8) Other column type (specify): _____
(9) Unknown

88. Blank — X X
(This variable is left blank so that numbering consistency can be maintained with the 1988-91 CDS.

89. Blank — X X X
(This variable is left blank so that numbering consistency can be maintained with the 1988-91 CDS.

90. Blank — X X X
(This variable is left blank so that numbering consistency can be maintained with the 1988-91 CDS.

91. Blank — X X X
(This variable is left blank so that numbering consistency can be maintained with the 1988-91 CDS.

92. Steering Rim/Spoke Deformation — 2
1/2 Code actual measured deformation to the nearest inch.
(0) No steering rim deformation
(1-5) Actual measured value
(6) 6 inches or more
(8) Observed deformation cannot be measured
(9) Unknown

93. Location of Steering Rim/Spoke Deformation — 07
(00) No steering rim deformation

Quarter Sections
(01) Section A
(02) Section B
(03) Section C
(04) Section D

Half Sections
(05) Upper half of rim/spoke
(06) Lower half of rim/spoke
(07) Left half of rim/spoke
(08) Right half of rim/spoke

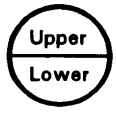

(09) Complete steering wheel collapse
(10) Undetermined location
(99) Unknown

INSTRUMENT PANEL

94. Odometer Reading — 999,000
_____miles—Code mileage to the nearest 1,000 miles
(000) No odometer
(001) Less than 1,500 miles
(300) 299,500 miles or more
(999) Unknown

Source: unknown

95. Instrument Panel Damage from Occupant Contact? — 1
(0) No
(1) Yes
(9) Unknown

96. Knee Bolsters Deformed from Occupant Contact? — 8
(0) No
(1) Yes
(8) Not present
(9) Unknown

97. Did Glove Compartment Door Open During Collision(s)? — 0
(0) No
(1) Yes
(8) Not present
(9) Unknown

VEHICLE INTERIOR SKETCHES

Note area of ejection/entrapment

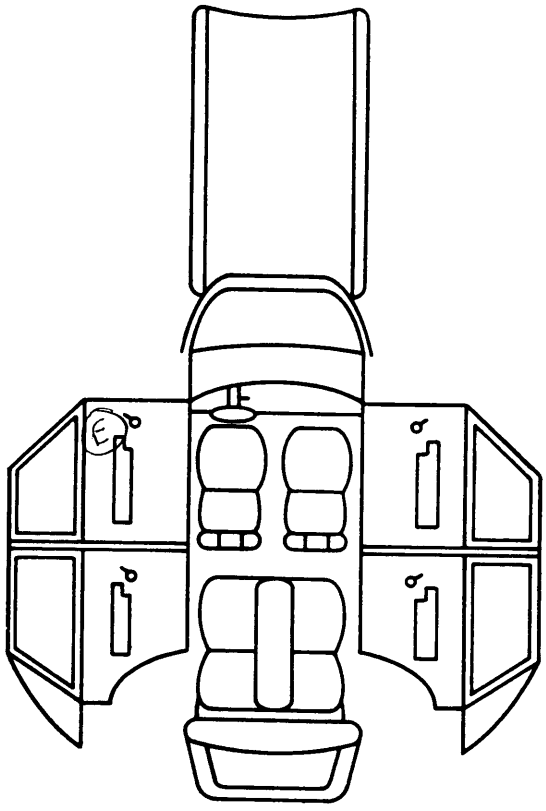

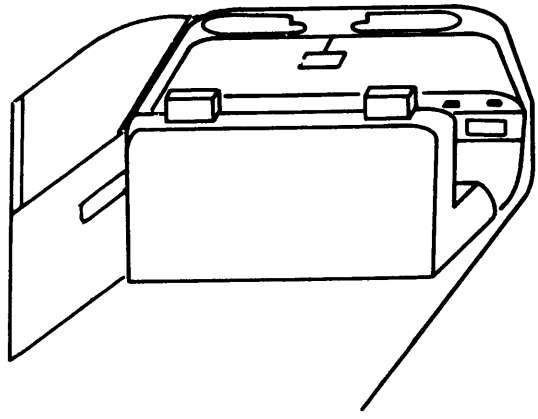

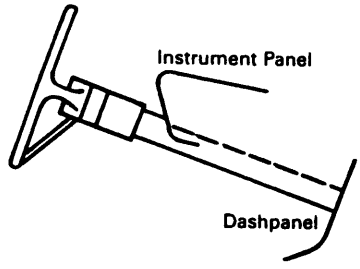

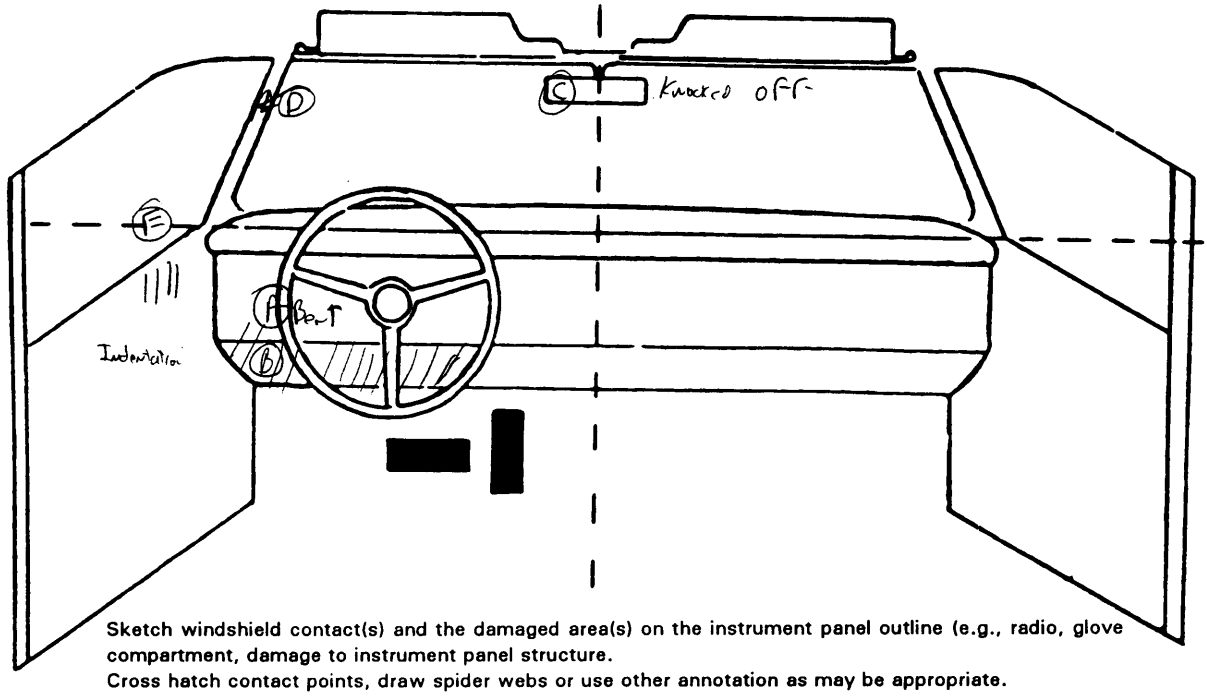

Sketch windshield contact(s) and the damaged area(s) on the instrument panel outline (e.g., radio, glove compartment, damage to instrument panel structure.
Cross hatch contact points, draw spider webs or use other annotation as may be appropriate.
Annotate the contacted area with a letter (begin with A) and list on the Points of Occupant Contact page.

POINTS OF OCCUPANT CONTACT

Contact	Interior Component Contacted	Occupant No. If Known	Body Region If Known	Supporting Physical Evidence	Confidence Level of Contact Point
A	04	1	CHEST	BENT	1
B	09	1	KNEES	CRACK	2
C	02	1	HEAD	KNOCKED off	3
D	22	1	HEAD	CRACK	2
E	21	1	(4) TORSO	CRACK	1
F					
G					
H					
I					
J					
K					
L					
M					
N					

CODES FOR INTERIOR COMPONENTS

FRONT
- (01) Windshield
- (02) Mirror
- (03) Sunvisor
- (04) Steering wheel rim
- (05) Steering wheel hub/spoke
- (06) Steering wheel (combination of codes 04 and 05)
- (07) Steering column, transmission selector lever, other attachment
- (08) Add on equipment (e.g., CB, tape deck, air conditioner)
- (09) Left instrument panel and below
- (10) Center instrument panel and below
- (11) Right instrument panel and below
- (12) Glove compartment door
- (13) Knee bolster
- (14) Windshield including one or more of the following: front header, A-pillar, instrument panel, mirror, or steering assembly (driver side only)
- (15) Windshield including one or more of the following: front header, A-pillar, instrument panel, or mirror (passenger side only)
- (16) Other front object (specify): _____

LEFT SIDE
- (20) Left side interior surface, excluding hardware or armrests
- (21) Left side hardware or armrest
- (22) Left A pillar
- (23) Left B pillar
- (24) Other left pillar (specify): _____
- (25) Left side window glass or frame
- (26) Left side window glass including one or more of the following: frame, window sill, A pillar, B pillar, or roof side rail.
- (27) Other left side object (specify): _____
- (28) Left side window sill

RIGHT SIDE
- (30) Right side interior surface, excluding hardware or armrests
- (31) Right side hardware or armrest
- (32) Right A pillar
- (33) Right B pillar
- (34) Other right pillar (specify): _____
- (35) Right side window glass or frame
- (36) Right side window glass including one or more of the following: frame, window sill, A pillar, B pillar, or roof side rail.
- (37) Other right side object (specify): _____
- (38) Right side window sill

INTERIOR
- (40) Seat, back support
- (41) Belt restraint webbing/buckle
- (42) Belt restraint B-pillar attachment point
- (43) Other restraint system component (specify): _____
- (44) Head restraint system
- (45) Air bag
- (46) Other occupants (specify): _____
- (47) Interior loose objects
- (48) Child safety seat (specify): _____
- (49) Other interior object (specify): _____

ROOF
- (50) Front header
- (51) Rear header
- (52) Roof left side rail
- (53) Roof right side rail
- (54) Roof or convertible top

FLOOR
- (56) Floor (including toe pan)
- (57) Floor or console mounted transmission lever, including console
- (58) Parking brake handle
- (59) Foot controls including parking brake

REAR
- (60) Backlight (rear window)
- (61) Backlight storage rack, door, etc.
- (62) Other rear object (specify): _____

CONFIDENCE LEVEL OF CONTACT POINT
- (1) Certain
- (2) Probable
- (3) Possible
- (9) Unknown

AUTOMATIC RESTRAINTS

NOTES: Encode the data for each applicable front seat position. The attribute for the variables may be found below. Restraint systems should be assessed during the vehicle inspection then coded on the Occupant Assessment Form.

AIR BAGS

		Left	Right
FIRST	Availability/Function		
	Deployment		
	Failure		

Air Bag System Availability/Function
- (0) Not equipped/not available
- (1) Air bag

Non-functional
- (2) Air bag disconnected (specify): _____
- (3) Air bag not reinstalled
- (9) Unknown

Air Bag System Deployment
- (0) Not equipped/not available
- (1) Air bag deployed during accident (as a result of impact)
- (2) Air bag deployed inadvertently just prior to accident
- (3) Air bag deployed, accident sequence undetermined
- (4) Nondeployed
- (5) Unknown if deployed
- (6) Air bag deployed as a result of a noncollision event during accident sequence (e.g., fire, explosion, electrical)
- (9) Unknown

Did Air Bag System Fail?
- (0) Not equipped/not available
- (1) No
- (2) Yes (specify): _____
- (9) Unknown

AUTOMATIC BELTS

		Left	Right
FIRST	Availability/Function		
	Use		
	Type		
	Proper Use		
	Failure Modes		

Automatic (Passive) Belt System Availability/Function
- (0) Not equipped/not available
- (1) 2 point automatic belts
- (2) 3 point automatic belts
- (3) Automatic belts - type unknown

Non-functional
- (4) Automatic belts destroyed or rendered inoperative
- (9) Unknown

Automatic (Passive) Belt System Use
- (0) Not equipped/not available/destroyed or rendered inoperative
- (1) Automatic belt in use
- (2) Automatic belt not in use (manually disconnected, motorized track inoperative)
- (3) Automatic belt use unknown
- (9) Unknown

Automatic (Passive) Belt System Type
- (0) Not equipped/not available
- (1) Non-motorized system
- (2) Motorized system
- (9) Unknown

Proper Use of Automatic (Passive) Belt System
- (0) Not equipped/not available/not used
- (1) Automatic belt used properly
- (2) Automatic belt used properly with child safety seat

Automatic Belt Used Improperly
- (3) Automatic shoulder belt worn under arm
- (4) Automatic shoulder belt worn behind back
- (5) Automatic belt worn around more than one person
- (6) Lap portion of automatic belt worn on abdomen
- (7) Automatic lap and shoulder belt or automatic shoulder belt used improperly with child safety seat (specify): _____
- (8) Other improper use of automatic belt system (specify): _____
- (9) Unknown

Automatic (Passive) Belt Failure Modes During Accident
- (0) Not equipped/not available/not in use
- (1) No automatic belt failure(s)
- (2) Torn webbing (stretched webbing not included)
- (3) Broken buckle or latchplate
- (4) Upper anchorage separated
- (5) Other anchorage separated (specify): _____
- (6) Broken retractor
- (7) Combination of above (specify):
- (8) Other automatic belt failure (specify): _____
- (9) Unknown

MANUAL RESTRAINTS

NOTES: Encode the applicable data for each seat position in the vehicle. The attribute for the variable may be found below. Restraint systems should be assessed during the vehicle inspection then coded on the Ocupant Assessment Form.

If a Child safety seat is present, encode the data on the back of this page.

If the vehicle has automatic restraints available, encode the appropriate data on the back of the previous page.

		Left	Center	Right
FIRST	Availability	4	—	4
	Use	00	—	00
	Failure Modes	0	—	0
SECOND	Availability	3	—	3
	Use	00	—	00
	Failure Modes	0	—	0
THIRD	Availability			
	Use			
	Failure Modes			
OTHER	Availability			
	Use			
	Failure Modes			

Manual (Active) Belt System Availability

(0) None available
(1) Belt removed/destroyed
(2) Shoulder belt
(3) Lap belt
(4) Lap and shoulder belt
(5) Belt available - type unknown

Integral Belt Partially Destroyed

(6) Shoulder belt (lap belt destroyed/removed)
(7) Lap belt (shoulder belt destroyed/removed)
(8) Other belt (specify): _____
(9) Unknown

Manual (Active) Belt System Use

(00) None used, not available, or belt removed/destroyed
(01) Inoperable (specify): _____
(02) Shoulder belt
(03) Lap belt
(04) Lap and shoulder belt
(05) Belt used - type unknown
(08) Other belt used (specify): _____
(12) Shoulder belt used with child safety seat
(13) Lap belt used with child safety seat
(14) Lap and shoulder belt used with child safety seat
(15) Belt used with child safety seat - type unknown
(18) Other belt used with child safety seat (specify): _____
(99) Unknown if belt used

Manual (Active) Belt Failure Modes During Accident

(0) No manual belt used or not available
(1) No manual belt failure(s)
(2) Torn webbing (stretched webbing not included)
(3) Broken buckle or latchplate
(4) Upper anchorage separated
(5) Other anchorage separated (specify): _____
(6) Broken retractor
(7) Combination of above (specify): _____
(8) Other manual belt failure (specify): _____
(9) Unknown

CHILD SAFETY SEAT FIELD ASSESSMENT

When a child safety seat is present enter the occupant's number in the first row and complete the column below the occupant's number using the codes listed below. Complete a column for each child safety seat present.

Occupant Number						
1. Type of Child Safety Seat						
2. Child Safety Seat Orientation						
3. Child Safety Seat Harness Usage						
4. Child Safety Seat Shield Uasge						
5. Child Safety Seat Tether Usage						
6. Child Safety Seat Make/Model	Specify Below for Each Child Safety Seat					

1. Type of Child Safety Seat

   (0) No child safety seat
   (1) Infant seat
   (2) Toddler seat
   (3) Convertible seat
   (4) Booster seat
   (7) Other type child safety seat (specify):

   _____

   (8) Unknown child safety seat type
   (9) Unknown if child safety seat used

2. Child Safety Seat Orientation

   (00) No child safety seat

   Designed for Rear Facing for This Age/Weight
   (01) Rear facing
   (02) Forward facing
   (08) Other orientation (specify):

   _____

   (09) Unknown orientation

   Designed for Forward Facing for This Age/Weight
   (11) Rear facing
   (12) Forward facing
   (18) Other orientation (specify):

   _____

   (19) Unknown orientation

   Unknown Design or Orientation For This Age/Weight, or Unknown Age/Weight
   (21) Rear facing
   (22) Forward facing
   (28) Other orientation (specify):

   _____

   (29) Unknown orientation

   (99) Unknown if child safety seat used

3. Child Safety Seat Harness Usage

4. Child Safety Seat Shield Usage

5. Child Safety Seat Tether Usage
   Note: Options Below Are Used for Variables 3-5.

   (00) No child safety seat

   Not Designed with Harness/Shield/Tether
   (01) After market harness/shield/tether added, not used
   (02) After market harness/shield/tether used
   (03) Child safety seat used, but no after market harness/shield/tether added
   (09) Unknown if harness/shield/tether added or used

   Designed With Harness/Shield/Tether
   (11) Harness/shield/tether not used
   (12) Harness/shield/tether used
   (19) Unknown if harness/shield/tether used

   Unknown If Designed With Harness/Shield/Tether
   (21) Harness/shield/tether not used
   (22) Harness/shield/tether used
   (29) Unknown if harness/shield/tether used

   (99) Unknown if child safety seat used

6. Child Safety Seat Make/Model
   (Specify make/model and occupant number)

   _____

   _____

   _____

   _____

HEAD RESTRAINTS/SEAT EVALUATION

NOTES: Encode the applicable data for each seat position in the vehicle. The attribute for these variables may be found at the bottom of the page. Head restraint type/damage and seat type/performance should be assessed during the vehicle inspection then coded on the Occupant Assessment Form.

		Left	Center	Right
FIRST	Head Restraint Type/Damage	8	—	8
	Seat Type	02	—	02
	Seat Performance	5	—	6
	Seat Orientation	1	—	1
SECOND	Head Restraint Type/Damage	0	—	0
	Seat Type	05	—	05
	Seat Performance	1	—	1
	Seat Orientation	1	—	1
THIRD	Head Restraint Type/Damage			
	Seat Type			
	Seat Performance			
	Seat Orientation			
OTHER	Head Restraint Type/Damage			
	Seat Type			
	Seat Performance			
	Seat Orientation			

Head Restraint Type/Damage by Occupant at This Occupant Position

(0) No head restraints
(1) Integral — no damage
(2) Integral — damaged during accident
(3) Adjustable — no damage
(4) Adjustable — damaged during accident
(5) Add-on — no damage
(6) Add-on — damaged during accident
(8) Other Specify): Removed
(9) Unknown

Seat Type (this Occupant Position)

(00) No seat
(01) Bucket
(02) Bucket with folding back
(03) Bench
(04) Bench with separate back cushions
(05) Bench with folding back(s)
(06) Split bench with separate back cushions
(07) Split bench with folding back(s)
(08) Pedestal (i.e., column supported)
(09) Other seat type (specify): _____
(10) Box mounted seat (i.e., van type)
(99) Unknown

Seat Performance (this Occupant Position)

(0) No seat
(1) No seat performance failure(s)
(2) Seat adjusters failed
(3) Seat back folding locks or "seat back" failed specify: _____
(4) Seat tracks/anchors failed
(5) Deformed by impact of occupant
(6) Deformed by passenger compartment intrusion (specify): Floor Pan
(7) Combination of above (specify): _____
(8) Other (specify): _____
(9) Unknown

Seat Orientation (this Occupant Position)

(0) No seat
(1) Forward facing seat
(2) Rear facing seat
(3) Side facing seat (inward)
(4) Side facing seat (outward)
(8) Other (specify): _____
(9) Unknown

DESCRIBE ANY INDICATION OF ABNORMAL OCCUPANT POSTURE (I.E., UNUSUAL OCCUPANT CONTACT PATTERN)

EJECTION/ENTRAPMENT DATA

Complete the following if the researcher has any indication that an occupant was either ejected from or entrapped in the vehicle. Code the appropriate data on the Occpant Assessment Form.

EJECTION No [✓] Yes [ ]

Describe indications of ejection and body parts involved in partial ejection(s):

_____

_____

_____

_____

_____

Occupant Number						
Ejection						
(Note on Vehicle Interior Sketch) Ejection Area						
Ejection Medium						
Medium Status						

Ejection
(1) Complete ejection
(1) Partial ejection
(3) Ejection, Unknown degree
(9) Unknown

Ejection Area
(1) Windshield
(2) Left front
(3) Right front
(4) Left rear
(5) Right rear
(6) Rear
(7) Roof
(8) Other area (e.g., back of pickup, etc.) (specify):

_____

(9) Unknown

Ejection Medium
(1) Door/hatch/tailgate
(2) Nonfixed roof structure
(3) Fixed glazing
(4) Nonfixed glazing (specify):

_____

(5) Integral structure
(8) Other medium (specify):

_____

(9) Unknown

Medium Status (Immediately Prior to Impact)
(1) Open
(2) Closed
(3) Integral structure
(9) Unknown

ENTRAPMENT No [✓] Yes [ ]

Describe entrapment mechanism: _____

_____

_____

_____

_____

Component(s): _____

_____

(Note in vehicle interior diagram)

PSU 05-152F V1-01

26. Seat Type (this Occupant Position) 02
(00) Occupant not seated or no seat
(01) Bucket
(02) Bucket with folding back
(03) Bench
(04) Bench with separate back cushions
(05) Bench with folding back(s)
(06) Split bench with separate back cushions
(07) Split bench with folding back(s)
(08) Pedestal (i.e., column supported)
(09) Other seat type (specify):
_____
(10) Box mounted seat (i.e., van type)
(99) Unknown

27. Seat Performance (this Occupant Position) 5
(0) Occupant not seated or no seat
(1) No seat performance failure(s)
(2) Seat adjusters failed
(3) Seat back folding locks or "seat back" failed
(4) Seat track/anchors failed
(5) Deformed by impact of occupant
(6) Deformed by passenger compartment intrusion (specify):
_____
_____
(7) Combination of above (specify):
_____
(8) Other (specify):
_____
(9) Unknown

CHILD SAFETY SEAT

28. Child Safety Seat Make/Model 000
(000) No child safety seat
Applicable codes are found in your NASS CDS Data Collection, Coding and Editing
(950) Built-in child safety seat
(997) Other make/model (specify):
_____
(998) Unknown make/model
(999) Unknown if child safety seat used

29. Type of Child Safety Seat 0
(0) No child safety seat
(1) Infant seat
(2) Toddler seat
(3) Convertible seat
(4) Booster seat
(7) Other type child safety seat (specify):
_____
(8) Unknown child safety seat type
(9) Unknown if child safety seat used

30. Child Safety Seat Orientation 00
(00) No child safety seat

Designed for Rear Facing for This Age/Weight
(01) Rear facing
(02) Forward facing
(08) Other orientation (specify):
_____
(09) Unknown orientation

Designed For Forward Facing for This Age/Weight
(11) Rear facing
(12) Forward facing
(18) Other orientation (specify):
_____
(19) Unknown orientation

Unknown Design or Orientation For This Age/Weight, or Unknown Age/Weight
(21) Rear facing
(22) Forward facing
(28) Other orientation (specify):
_____
(29) Unknown orientation

(99) Unknown if child safety seat used

31. Child Safety Seat Harness Usage 00

32. Child Safety Seat Shield Usage 00

33. Child Safety Seat Tether Usage 00
Note: Options below applicable to Variables OA31-OA33.
(00) No child safety seat

Not Designed With Harness/Shield/Tether
(01) After market harness/shield/tether added, not used
(02) After market harness/shield/tether used
(03) Child safety seat used, but no after market harness/shield/tether added
(09) Unknown if harness/shield/tether added or used

Designed With Harness/Shield/Tether
(11) Harness/shield/tether not used
(12) Harness/shield/tether used
(19) Unknown if harness/shield/tether used

Unknown If Designed With Harness/Shield/Tether
(21) Harness/shield/tether not used
(22) Harness/shield/tether used
(29) Unknown if harness/shield/tether used

(99) Unknown if child safety seat used

BEST AVAILABLE

U.S. Department of Transportation

National Highway Traffic Safety Administration

OCCUPANT INJURY FORM

Form Approved
O.M.B. No. 2127-0021

NATIONAL ACCIDENT SAMPLING SYSTEM
CRASHWORTHINESS DATA SYSTEM

1. Primary Sampling Unit Number	05	3. Vehicle Number	01
2. Case Number - Stratum	152 F	4. Occupant Number	01

INJURY DATA

Record below the actual injuries sustained by this occupant that were identified from the official and unofficial data sources. Remember not to double count an injury just because it was identified from two different sources. If greater than ten injuries have been documented, encode the balance on the Occupant Injury Supplement.

	Source of Injury Data	O.I.C.-A.I.S Body Region	Aspect	Lesion	System Organ	A.I.S. Severity	Injury Source	Injury Source Confidence Level	Direct/ Indirect Injury	Occupant Area Intrusion No.
1st	5. 3	6. N	7. P	8. T	9. M	10. 1	11. 97	12. 9	13. 7	14. 99
2nd	15. 3	16. F	17. I	18. L	19. I	20. 1	21. 21	22. 3	23. 1	24. 00
3rd	25. 3	26. P	27. L	28. A	29. I	30. 1	31. 21	32. 3	33. 1	34. 00
4th	35. 3	36. L	37. L	38. A	39. I	40. 1	41. 09	42. 3	43. 1	44. 00
5th	45. 3	46. K	47. R	48. A	49. I	50. 1	51. 10	52. 3	53. 1	54. 00
6th	55.	56.	57.	58.	59.	60.	61.	62.	63.	64.
7th	65.	66.	67.	68.	69.	70.	71.	72.	73.	74.
8th	75.	76.	77.	78.	79.	80.	81.	82.	83.	84.
9th	85.	86.	87.	88.	89.	90.	91.	92.	93.	94.
10th	95.	96.	97.	98.	99.	100.	101.	102.	103.	104.

HS Form 433B (1/92)

This report is authorized by P.L. 89-563, Title 1, Section 106, 108, and 112. While you are not required to respond, your cooperation is needed to make the results of this data collection effort comprehensive, accurate, and timely.

OCCUPANT INJURY DATA

	Source of Injury Data	O.I.C.-A.I.S					Injury Source	Injury Source Confidence Level	Direct/ Indirect Injury	Occupant Area Intrusion No.
		Body Region	Aspect	Lesion	System Organ	A.I.S. Severity				
11th	—	—	—	—	—	—	— —	—	—	— —
12th	—	—	—	—	—	—	— —	—	—	— —
13th	—	—	—	—	—	—	— —	—	—	— —
14th	—	—	—	—	—	—	— —	—	—	— —
15th	—	—	—	—	—	—	— —	—	—	— —
16th	—	—	—	—	—	—	— —	—	—	— —
17th	—	—	—	—	—	—	— —	—	—	— —
18th	—	—	—	—	—	—	— —	—	—	— —
19th	—	—	—	—	—	—	— —	—	—	— —
20th	—	—	—	—	—	—	— —	—	—	— —
21st	—	—	—	—	—	—	— —	—	—	— —
22nd	—	—	—	—	—	—	— —	—	—	— —
23rd	—	—	—	—	—	—	— —	—	—	— —
24th	—	—	—	—	—	—	— —	—	—	— —
25th	—	—	—	—	—	—	— —	—	—	— —

OFFICIAL INJURY DATA — SOFT TISSUE INJURIES

Indicate the Location, Lesion, Detail (size, depth, fracture type, head injury clinical signs and neurological deficits), and Source of all injuries indicated by official sources (or from PAR or other unofficial sources if medical records and interviewee data are unavailable.)

QUESTIONABLE L.O.C.

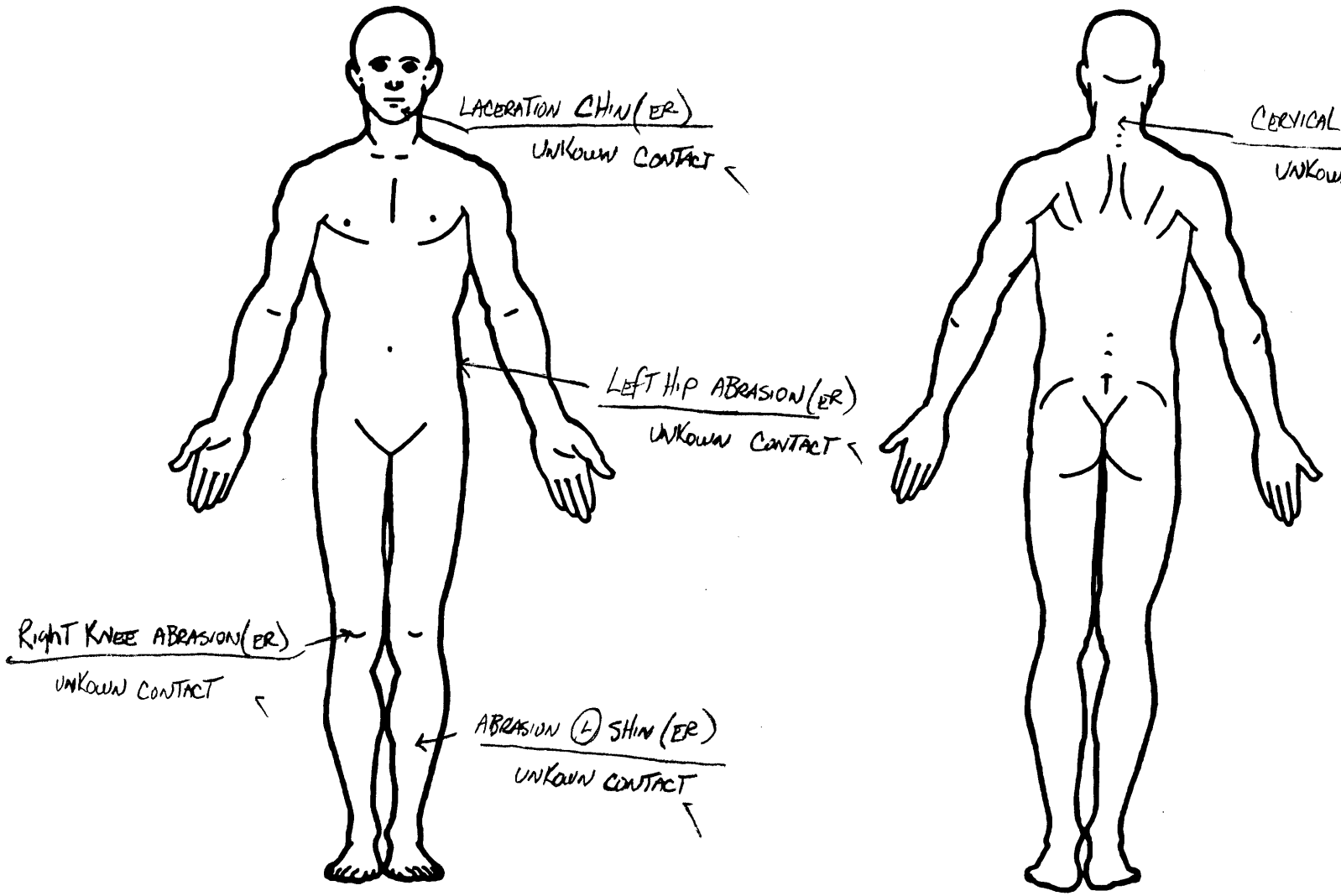

SOURCE OF INJURY DATA

OFFICIAL
(1) Autopsy records with or without hospital medical records
(2) Hospital medical records other than emergency room (e.g., dishcarge summary)
(3) Emergency room records only (including associated X-rays or other lab reports)
(4) Private physician, walk-in or emergency clinic

UNOFFICIAL
(5) Lay coroner report
(6) E.M.S. personnel
(7) Interviewee
(8) Other source (specify):

_____

(9) Police

INJURY SOURCE

FRONT
(01) Windshield
(02) Mirror
(03) Sunvisor
(04) Steering wheel rim
(05) Steering wheel hub/spoke
(06) Steering wheel (combination of codes 04 and 05)
(07) Steering column, transmission selector lever, other attachment
(08) Add on equipment (e.g., CB, tape deck, air conditioner)
(09) Left instrument panel and below
(10) Center instrument panel and below
(11) Right instrument panel and below
(12) Glove compartment door
(13) Knee bolster
(14) Windshield including one or more of the following: front header, A-pillar, instrument panel, mirror, or steering assembly (driver side only)
(15) Windshield including one or more of the following: front header, A-pillar, instrument panel, or mirror (passenger side only)
(16) Other front object (specify):

_____

LEFT SIDE
(20) Left side interior surface, excluding hardware or armrests
(21) Left side hardware or armrest
(22) Left A pillar
(23) Left B pillar
(24) Other left pillar (specify):

_____

(25) Left side window glass or frame
(26) Left side window glass including one or more of the following: frame, window sill, A-pillar, B-pillar, or roof side rail.
(27) Other left side object (specify):

_____

(28) Left side window sill

RIGHT SIDE
(30) Right side interior surface, excluding hardware or armrests
(31) Right side hardware or armrest
(32) Right A pillar
(33) Right B pillar
(34) Other right pillar (specify):

_____

(35) Right side window glass or frame
(36) Right side window glass including one or more of the following: frame, window sill, A pillar, B pillar, or roof side rail.
(37) Other right side object (specify):

_____

(38) Right side window sill

INTERIOR
(40) Seat, back support
(41) Belt restraint webbing/buckle
(42) Belt restraint B-pillar attachment point
(43) Other restraint system component (specify):_____
(44) Head restraint system
(45) Air bag
(46) Other occupants (specify):

_____

(47) Interior loose objects
(48) Child safety seat (specify):

_____

(49) Other interior object (specify):

_____

ROOF
(50) Front header
(51) Rear header
(52) Roof left side rail
(53) Roof right side rail
(54) Roof or convertible top

FLOOR
(56) Floor (including toe pan)
(57) Floor or console mounted transmission lever, including console
(58) Parking brake handle
(59) Foot controls including parking brake

REAR
(60) Backlight (rear window)
(61) Backlight storage rack, door, etc.
(62) Other rear object (specify):

_____

EXTERIOR of OCCUPANT'S VEHICLE
(65) Hood
(66) Outside hardware (e.g., outside mirror, antenna)
(67) Other exterior surface or tires (specify):_____
(68) Unknown exterior objects

EXTERIOR OF OTHER MOTOR VEHICLE
(70) Front bumper
(71) Hood edge
(72) Other front of vehicle (specify):

_____

(73) Hood
(74) Hood ornament
(75) Windshield, roof rail, A-pillar
(76) Side surface
(77) Side mirrors
(78) Other side protrusions (specify)

_____

(79) Rear surface
(80) Undercarriage
(81) Tires and wheels
(82) Other exterior of other motor vehicle (specify):

_____

(83) Unknown exterior of other motor vehicle

OTHER VEHICLE OR OBJECT IN THE ENVIRONMENT
(84) Ground
(85) Other vehicle or object (specify)

_____

(86) Unknown vehicle or object

NONCONTACT INJURY
(90) Fire in vehicle
(91) Flying glass
(92) Other noncontact injury source (specify):_____
(93) Air bag exhaust gases
(97) Injured, unknown source

INJURY SOURCE CONFIDENCE LEVEL

(1) Certain
(2) Probable
(3) Possible
(9) Unknown

DIRECT/INDIRECT INJURY

(1) Direct contact injury
(2) Indirect contact injury
(3) Noncontact injury
(7) Injured, unknown source

OCCUPANT INJURY CLASSIFICATION

O.I.C. Body Region

(M) Abdomen
(Q) Ankle—foot
(A) Arm (upper)
(B) Back-thoracolumbar spine
(C) Chest
(E) Elbow
(F) Face
(R) Forearm
(H) Head—skull
(U) Injured, unknown region
(K) Knee
(L) Leg (lower)
(Y) Lower limbs(s) (whole or unknown part)
(N) Neck—cervical spine
(P) Pelvic—hip
(S) Shoulder
(T) Thigh
(X) Upper limb(s) (whole or unknown part)
(O) Whole body
(W) Wrist—hand

Aspect of Injury

(A) Anterior—front
(B) Bilateral (rib fracture only)
(C) Central
(I) Inferior—lower
(U) Injured, unknown aspect
(L) Left
(P) Posterior—back
(R) Right
(S) Superior—upper
(W) Whole region

Lesion

(A) Abrasion
(M) Amputation
(V) Avulsion
(B) Burn
(K) Concussion
(C) Contusion
(N) Crush
(G) Detachment, separation
(D) Dislocation
(F) Fracture
(Z) Fracture and dislocation
(U) Injured, unknown lesion
(L) Laceration
(O) Other
(P) Perforation, puncture
(R) Rupture
(S) Sprain
(T) Strain
(E) Total severance, transection

System/Organ

(W) All systems in region
(A) Arteries—veins
(B) Brain
(D) Digestive
(E) Ears
(O) Eye
(H) Heart
(U) Injured, unknown system
(I) Integumentary
(J) Joints
(K) Kidneys
(L) Liver
(M) Muscles
(N) Nervous system
(P) Pulmonary—lungs
(R) Respiratory
(S) Skeletal
(C) Spinal cord
(Q) Spleen
(T) Thyroid, other endocrine gland
(V) Vertebrae

Abbreviated Injury Scale

(1) Minor injury
(2) Moderate injury
(3) Seriour injury
(4) Severe injury
(5) Critical injury
(6) Maximum (untreatable)
(7) Injured, unknown severity

OFFICIAL INJURY DATA — SKELETAL INJURIES

Restrained?

___ No

___ Yes

Blood Alcohol Level (mg/dl)

BAL = ____

Glasgow Coma Scale Score

GCSS = ____

Units of Blood Given

Units = ____

Aterial Blood Gases

pH = __.__

PO_2 = ____

PCO_2 ____

HCO_3 ____

Indicate the Location, Lesion, Detail (size, depth, fracture type, head injury clinical signs and neurological deficits), and Source of all injuries indicated by official sources (or from PAR or other unofficial sources if medical records and interviewee data are unavailable.)

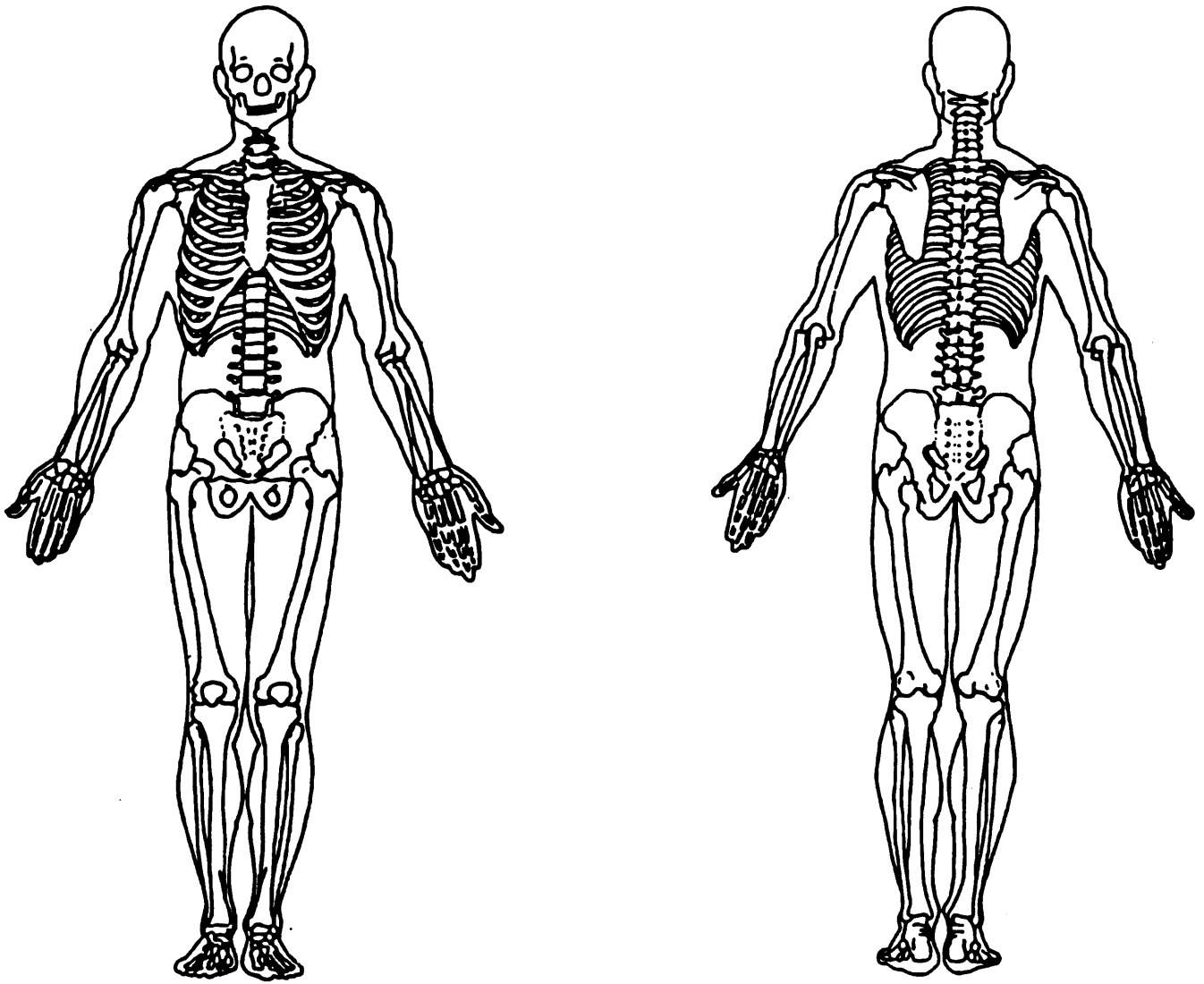

OFFICIAL INJURY DATA —INTERNAL INJURIES

Indicate the Location, Lesion, Detail (size, depth, fracture type, head injury clinical signs and neurological deficits), and Source of all injuries indicated by official sources (or from PAR or other unofficial sources if medical records and interviewee data are unavailable.)

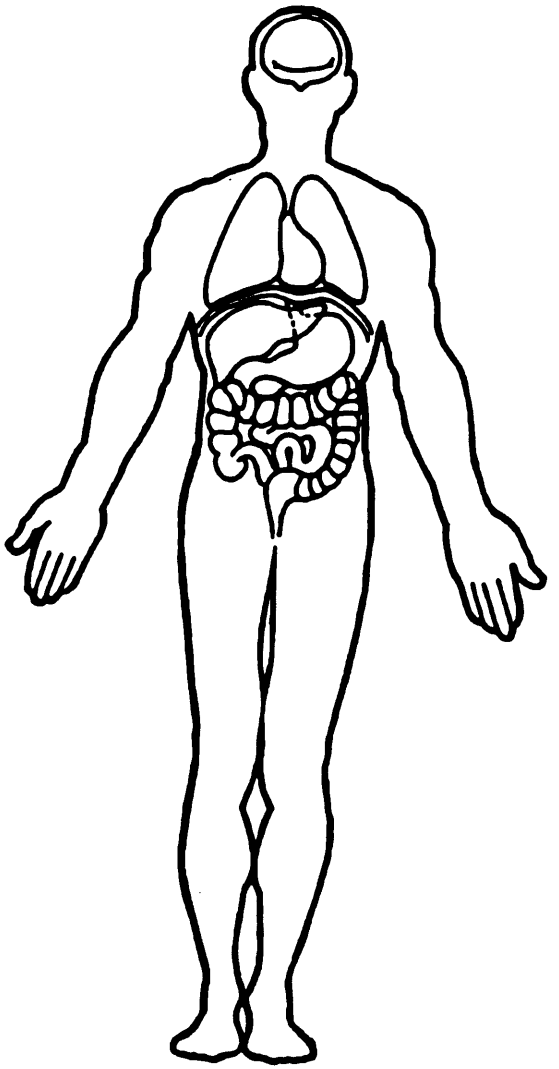

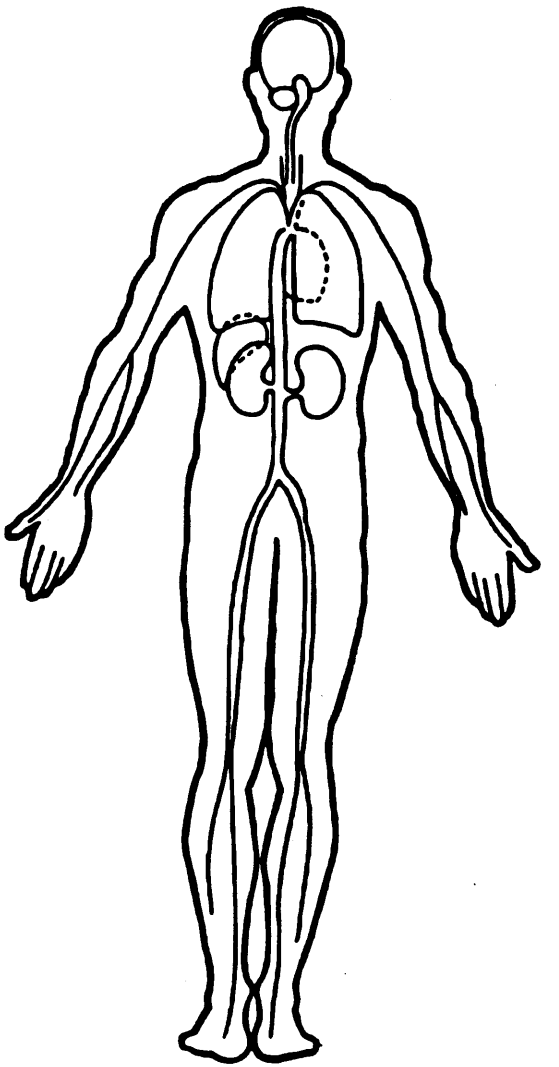

PSU 05-152F V-02

OCCUPANT RELATED

16. Driver Presence in Vehicle: 1
(0) Driver not present
(1) Driver present
(9) Unknown

17. Number of Occupants This Vehicle: 01
(00-96) Code actual number of occupants for this vehicle
(97) 97 or more
(99) Unknown

18. Number of Occupant Forms Submitted: 00

VEHICLE WEIGHT ITEMS

19. Vehicle Curb Weight: 02,700
2660 Code weight to nearest 100 pounds.
(010) Less than 1050 pounds
(135) 13,500 pounds or more
(999) Unknown

Source: _____

20. Vehicle Cargo Weight: 0,000
____ Code weight to nearest 100 pounds.
(00) Less than 50 pounds
(97) 9,650 pounds or more
(99) Unknown

RECONSTRUCTION DATA

21. Towed Trailing Unit: 0
(0) No towed unit
(1) Yes—towed trailing unit
(9) Unknown

22. Documentation of Trajectory Data for This Vehicle: 0
(0) No
(1) Yes

23. Post Collision Condition of Tree or Pole (For Highest Delta V): 0
(0) Not collision (for highest delta V) with tree or pole
(1) Not damaged
(2) Cracked/sheared
(3) Tilted <45 degrees
(4) Tilted ≥45 degrees
(5) Uprooted tree
(6) Separated pole from base
(7) Pole replaced
(8) Other (specify): _____
(9) Unknown

24. Rollover: 0
(0) No rollover (no overturning)

Rollover (primarily about the longitudinal axis)
(1) Rollover, 1 quarter turn only
(2) Rollover, 2 quarter turns
(3) Rollover, 3 quarter turns
(4) Rollover, 4 or more quarter turns (specify): _____
(5) Rollover--end-over-end (i.e., primarily about the lateral axis)
(9) Rollover (overturn), details unknown

OVERRIDE/UNDERRIDE (THIS VEHICLE)

25. Front Override/Underride (this Vehicle): 0

26. Rear Override/Underride (this Vehicle): 9

(0) No override/underride, or not an end-to-end impact

Override (see specific CDC)
(1) 1st CDC
(2) 2nd CDC
(3) Other not automated CDC (specify): _____

Underride (see specific CDC)
(4) 1st CDC
(5) 2nd CDC
(6) Other not automated CDC (specify): _____
(7) Medium/heavy truck or bus override
(9) Unknown

HEADING ANGLE AT IMPACT FOR HIGHEST DELTA V

Values: (000)-(359) Code actual value
(997) Noncollision
(998) Impact with object
(999) Unknown

27. Heading Angle For This Vehicle: 094

28. Heading Angle For Other Vehicle: 082

PSU 05-158F V-02

Category	Configuration	ACCIDENT TYPES (Includes Intent)
I. Single Driver	A. Right Roadside Departure	01 DRIVE OFF ROAD; 02 CONTROL/ TRACTION LOSS; 03 AVOID COLLISION WITH VEH., PED., ANIM.; 04 SPECIFICS OTHER; 05 SPECIFICS UNKNOWN
	B. Left Roadside Departure	06 DRIVE OFF ROAD; 07 CONTROL/ TRACTION LOSS; 08 AVOID COLLISION WITH VEH., PED., ANIM.; 09 SPECIFICS OTHER; 10 SPECIFICS UNKNOWN
	C. Forward Impact	11 PARKED VEH.; 12 STA. OBJECT; 13 PEDESTRIAN/ ANIMAL; 14 END DEPARTURE; 15 SPECIFICS OTHER; 16 SPECIFICS UNKNOWN
II. Same Trafficway Same Direction	D. Rear-End	20 STOPPED; 21, 22, 23; 24 SLOWER; 25, 26, 27; 28 DECEL.; 29, 30, 31; (EACH • 32) SPECIFICS OTHER; (EACH • 33) SPECIFICS UNKNOWN
	E. Forward Impact	34, 35 CONTROL/ TRACTION LOSS; 36, 37 CONTROL/ TRACTION LOSS; 38, 39 AVOID COLLISION WITH VEH.; 40, 41 AVOID COLLISION WITH OBJECT; (EACH • 42) SPECIFICS OTHER; (EACH • 43) SPECIFICS UNKNOWN
	F. Sideswipe Angle	44, 45; 46, 45, 47; (EACH • 48) SPECIFICS OTHER; (EACH • 49) SPECIFICS UNKNOWN
III. Same Trafficway Opposite Direction	G. Head-On	50, 51 LATERAL MOVE; (EACH • 52) SPECIFICS OTHER; (EACH • 53) SPECIFICS UNKNOWN
	H. Forward Impact	54, 55 CONTROL/ TRACTION LOSS; 56, 57 CONTROL/ TRACTION LOSS; 58, 59 AVOID COLLISION WITH VEH.; 60, 61 AVOID COLLISION WITH OBJECT; (EACH • 62) SPECIFICS OTHER; (EACH • 63) SPECIFICS UNKNOWN
	I. Sideswipe/ Angle	64, 65 LATERAL MOVE; (EACH • 66) SPECIFICS OTHER; (EACH • 67) SPECIFICS UNKNOWN
IV. Change Trafficway Vehicle Turning	J. Turn Across Path	68, 69 INITIAL OPPOSITE DIRECTIONS; 70, 71 INITIAL SAME DIRECTIONS; 72, 73; (EACH • 74) SPECIFICS OTHER; (EACH • 75) SPECIFICS UNKNOWN
	K. Turn Into Path	76, 77 TURN INTO SAME DIRECTION; 78, 79 TURN INTO SAME DIRECTION; 80, 81 TURN INTO OPPOSITE DIRECTIONS; 82, 83 TURN INTO OPPOSITE DIRECTIONS; (EACH • 84) SPECIFICS OTHER; (EACH • 85) SPECIFICS UNKNOWN
V. Intersecting Paths (Vehicle Damage)	L. Straight Paths	86, 87; 88, 89; (EACH • 90) SPECIFICS OTHER; (EACH • 91) SPECIFICS UNKNOWN
VI. Miscellaneous	M. Backing Etc.	92 BACKING VEH.; 93 OTHER VEH. OR OBJECT; 98 Other Accident Type; 99 Unknown Accident Type; 00 No Impact

OTHER DATA

56. Driver's Zip Code ____ ____ ____ ____ ____

(00000) Driver not present
(00001) Driver not a resident of U.S. or territories
_____ Code actual 5-digit zip code
(99999) Unknown

57. Driver's Race/Ethnic Origin 9
(0) Driver not present
(1) White (non-Hispanic)
(2) Black (non-Hispanic)
(3) White (Hispanic)
(4) Black (Hispanic)
(5) American Indian, Eskimo or Aleut
(6) Asian or Pacific Islander
(8) Other (specify):
_____
(9) Unknown

58. Vehicle Special Use (This Trip) 0
(0) No special use
(1) Taxi
(2) Vehicle used as school bus
(3) Vehicle used as other bus
(4) Military
(5) Police
(6) Ambulance
(7) Hearse
(8) Fire truck or car
(9) Unknown

ROLLOVER DATA

If GV07 (Body Type) ≠ 1-49, leave GV59-GV63 blank.
If GV24 (Rollover) = 0, then GV59-GV63 must equal 0.
If GV24 = 9, then GV59-GV63 must equal 9.

59. Rollover Initiation Type 0
(0) No rollover
(1) Trip-over
(2) Flip-over
(3) Turn-over
(4) Climb-over
(5) Fall-over
(6) Bounce-over
(7) Collision with another vehicle
(8) Other rollover initiation type specify):
_____
(9) Unknown rollover initiation type

60. Location of Rollover Initiation 0
(0) No rollover
(1) On roadway
(2) On shoulder—paved
(3) On shoulder—unpaved
(4) On roadside or divided trafficway median
(9) Unknown

61. Rollover Initiation Object Contacted 00

62. Location on Vehicle Where Initial Principal Tripping Force Is Applied 0
(0) No rollover
(1) Wheels/tires
(2) Side plane
(3) End plane
(4) Undercarriage
(5) Other location on vehicle (specify):
_____
(8) Non-contact rollover forces (specify):
_____
(9) Unknown

63. Direction of Initial Roll 0
(0) No rollover
(1) Roll right - primarily about the longitudinal axis
(2) Roll left - primarily about the longitudinal axis
(5) End-over-end (i.e., primarily about the lateral axis)
(9) Unknown roll direction

PRECRASH DATA

64. Pre-Event Movement (Prior to Recognition of Critical Event) 01
(01) Going straight
(02) Slowing or stopping in traffic lane
(03) Starting in traffic lane
(04) Stopped in traffic lane
(05) Passing or overtaking another vehicle
(06) Disabled or parked in travel lane
(07) Leaving a parking position
(08) Entering a parking position
(09) Turning right
(10) Turning left
(11) Making a U-turn
(12) Backing up (other than for parking position)
(13) Negotiating a curve
(14) Changing lanes
(15) Merging
(16) Successful avoidance maneuver to a previous critical event
(97) Other (specify):
_____
(98) No driver present
(99) Unknown

psu 05-152F V-02

CODES FOR ROLLOVER INITIATION OBJECT CONTACTED

(00) No rollover
(01-30) — Vehicle Number

Noncollision
(31) Turn-over — fall-over
(33) Jackknife

Collision With Fixed Object
(41) Tree (≤ 4 inches in diameter)
(42) Tree (> 4 inches in diameter)
(43) Shrubbery or bush
(44) Embankment

(45) Breakaway pole or post (any diameter)

Nonbreakaway Pole or Post
(50) Pole or post (≤ 4 inches in diameter)
(51) Pole or post (> 4 inches but ≤ 12 inches in diameter)
(52) Pole or post (> 12 inches in diameter)
(53) Pole or post (diameter unknown)

(54) Concrete traffic barrier
(55) Impact attenuator
(56) Other traffic barrier (includes guardrail) (specify):_____

(57) Fence
(58) Wall
(59) Building
(60) Ditch or culvert
(61) Ground
(62) Fire hydrant
(63) Curb
(64) Bridge
(68) Other fixed object (specify):

_____

(69) Unknown fixed object

Collision with Nonfixed Object
(71) Motor vehicle not in-transport
(76) Animal
(77) Train
(78) Trailer, disconnected in transport
(88) Other nonfixed object (specify):

_____

(89) Unknown nonfixed object

(98) Other event (specify):

_____

(99) Unknown event or object

PSU NUMBER 05

CASE NUMBER 152F

VEHICLE NUMBER 02

EXTERIOR VEHICLE FORM

THE FOLLOWING DATA IS NOT INCLUDED IN THIS CASE:

[✓] ENTIRE FORM

[ ] PAGE NUMBER (S) _____

PSU NUMBER 05

CASE NUMBER 152F

VEHICLE NUMBER 02

INTERIOR VEHICLE FORM

THE FOLLOWING DATA IS NOT INCLUDED IN THIS CASE:

[✓] ENTIRE FORM

[ ] PAGE NUMBER (S) _____

PSU NUMBER 05

CASE NUMBER 152F

VEHICLE NUMBER 02

OCCUPANT NUMBER 01

OCCUPANT ASSESSMENT FORM

THE FOLLOWING DATA IS NOT INCLUDED IN THIS CASE:

[✓] ENTIRE FORM

[] PAGE NUMBER (S) _____

PSU NUMBER 05

CASE NUMBER 152F

VEHICLE NUMBER 02

OCCUPANT NUMBER 01

OCCUPANT INJURY FORM

THE FOLLOWING DATA IS NOT INCLUDED IN THIS CASE:

[✓] ENTIRE FORM

[ ] PAGE NUMBER (S) _____

U.S. Department of Transportation
National Highway Traffic Safety Administration

OLDMISS PROGRAM SUMMARY

NATIONAL ACCIDENT SAMPLING SYSTEM
CRASHWORTHINESS DATA SYSTEM

Identifying Title

05	15 2 F	01	92
Primary Sampling Unit	Case No.-Stratum	Accident Event Sequence No.	Date (Month, day, year) of Run

OLDMISS Vehicle Identification

Vehicle 1	1977	VOLKSWAGON	RABBIT	1
Vehicle 2	1980	SAAB	900 GLE	2
	Year	Make	Model	NASS Veh. No.

GENERAL INFORMATION

VEHICLE 1	VEHICLE 2
Size: 1	Size: 2
Weight: 1860 (Curb) + 150 (Occupant(s)) + 000 (Cargo) = 2010	Weight: 2660 (Curb) + 132 (Occupant(s)) + 000 (Cargo) = 2792
Damaged Area of Vehicle (F = Front, L = Left, R = Right, B = Back): F (Vehicle 1)	Damaged Area of Vehicle (F = Front, L = Left, R = Right, B = Back): B (Vehicle 2)
Vehicle Heading Angles At Impact, in Degrees: ⊕ 082° (Vehicle 1)	Vehicle Heading Angles At Impact, in Degrees: ⊕ 094° (Vehicle 2)
Stiffness Category for Vehicle: 1 (Vehicle 1)	Stiffness Category for Vehicle: 2 (Vehicle 2)

DAMAGE INFORMATION

For Which Vehicle Is The Damage Known: 1

PDOF for Known Vehicle in Degrees (-180 to +180): ± 360

Damage Length (L) in Inches for Known Vehicle: 55.5

Crush Measurements for Known Vehicle (Inches):

C_1	5.5
C_2	11.0
C_3	17.75
C_4	15.5
C_5	13.5
C_6	11.5

Damage Midpoint Offset (D) for Known Vehicle (Inches): ⊕ 11.25

Estimated Damage Midpoint Offset (D) for Unknown Vehicle (Inches): ± 13.00

:INPUT CALCULATE OUTPUT GRAPHICS EXIT :
HMMMMMMMMMMMMMMMMMMMMMMMMMMMMMMMMMMMMMMMMMMMMMMMMMMMMMMMMMMMMMMMMMMMMMMMMMMMMM<

SUMMARY OF OLDMISPC RESULTS

05 152F Z.C.RUN

SPEED CHANGE (DAMAGE)

	RESULTANT MPH	(KPH)	LONGITUDINAL MPH	(KPH)	LATERAL MPH	(KPH)	PDOF DEG
VEH #1 (KNOWN)	27.50	(44.25)	-27.50	(-44.24)	-.48	(-.77)	1.00
VEH #2 (ESTIMATED)	19.80	(31.86)	19.44	(31.27)	-3.78	(-6.08)	169.00

	ENERGY FT-LBS	(NT-M)	FORCE LBS	(NT)
VEH #1 (KNOWN)	43069.2	(58388.2)	51303.7	(228198.8)
VEH #2 (ESTIMATED)	48637.2	(65936.7)	51303.7	(228198.8)

PRESS ANY KEY TO CONTINUE

:INPUT CALCULATE OUTPUT GRAPHICS EXIT :
HMMMMMMMMMMMMMMMMMMMMMMMMMMMMMMMMMMMMMMMMMMMMMMMMMMMMMMMMMMMMMMMMMMMMMMMMMMMMM<

SUMMARY OF DAMAGE DATA

VEHICLE #1 (KNOWN DAMAGE DIMENSION)	IN	(CM)
L------------	55.5	141.0
C1-----------	5.5	14.0
C2-----------	11.0	27.9
C3-----------	17.8	45.1
C4-----------	15.5	39.4
C5-----------	13.5	34.3
C6-----------	11.5	29.2
D------------	11.3	28.6

VEHICLE #2 (ESTIMATED DAMAGE DIMENSION)	IN	(CM)
L------------	56.8	144.2
C1-----------	3.6	9.2
C2-----------	9.7	24.7
C3-----------	17.2	43.7
C4-----------	14.7	37.3
C5-----------	12.5	31.7
C6-----------	10.3	26.1
D------------	-5.2	-13.3

(DOFF ADJUSTED 7.8 INCHES
TO MATCH VEHICLE DIMENSION)

PRESS ANY KEY TO CONTINUE

:INPUT CALCULATE OUTPUT GRAPHICS EXIT :

VEHICLE INFORMATION

VEHICLE #1 (FRONT DAMAGE KNOWN)		VEHICLE #2 (REAR DAMAGE UNKNOWN)	
SIZE------	1	SIZE------	2
STIFFNESS-	1	STIFFNESS-	2
SIDE------	F	SIDE------	B
HANGL------	82.0 DEG	HANGL------	94.0 DEG
WEIGHT-----	2010.0 LBS (911.6 KG)	WEIGHT-----	2792.0 LBS (1266.2 KG)
MASS-------	5.202 LB-SEC**2/IN (58.77 NT-SEC**2/CM)	MASS-------	7.226 LB-SEC**2/IN (81.64 NT-SEC**2/CM)
RADIUS GYRATION--	2006.0 IN**2 (12941.9 CM**2)	RADIUS GYRATION--	2951.0 IN**2 (19038.7 CM**2)

PRESS ANY KEY TO CONTINUE

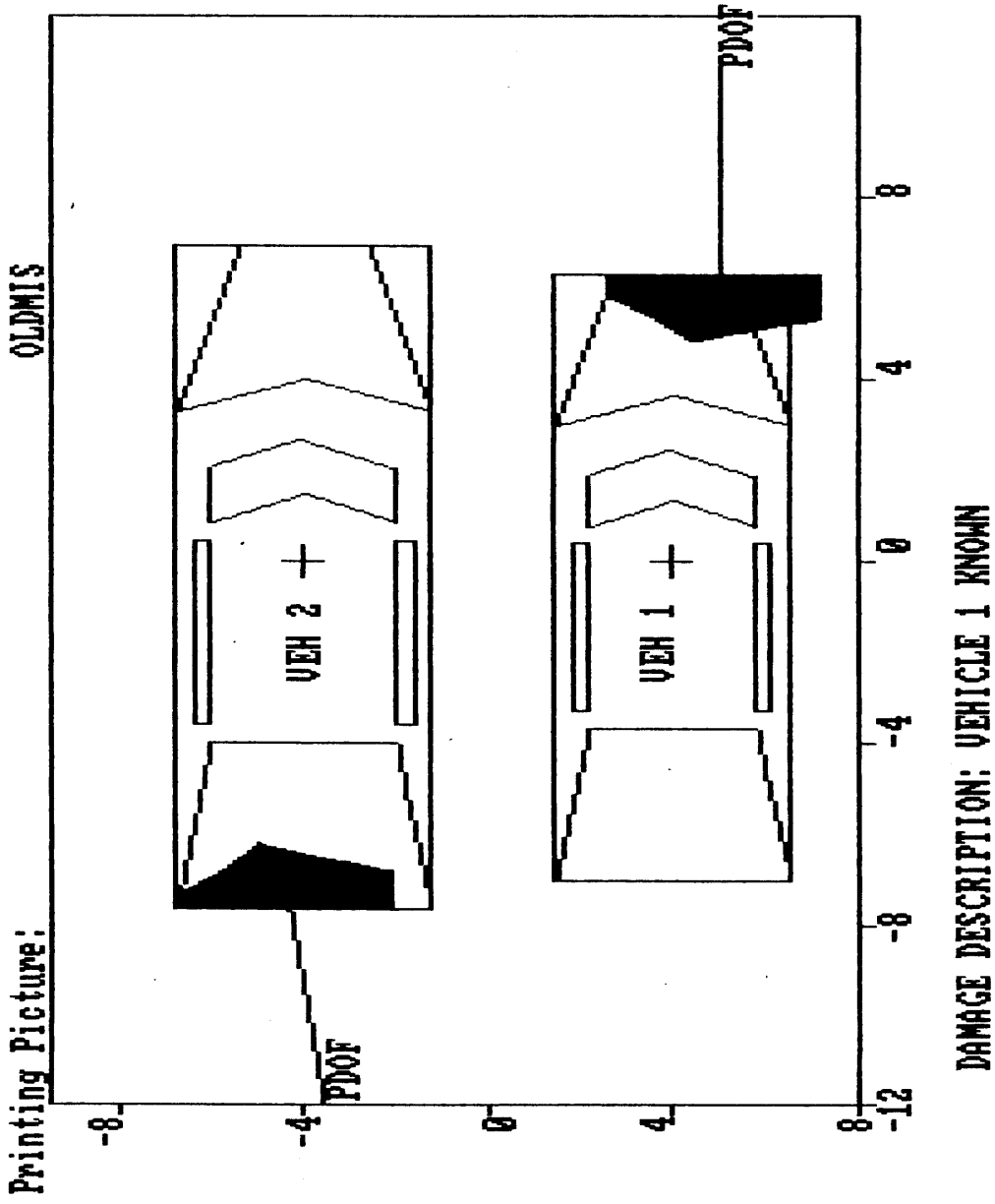

National Accident Sampling System

PSU05 ERROR SUMMARY SCREEN 93
CASE 152F
CURRENT VERSION: 6.01

FORM NAME	NUMBER OF DOLLAR SIGNS	NUMBER OF LEVEL 1 ERRORS	NUMBER OF LEVEL 2 ERRORS	VERSION NUMBER CONSISTENT
Accident	0	0	0	Y
General Vehicle	0	0	0	Y
Vehicle Exterior	0	0	0	Y
Vehicle Interior	0	0	1	Y
Occupant Assesment	0	0	1	Y
Occupant Interior	0	0	0	Y
Total Inter Errors		0	0	
Total Case Errors	0	0	2	

Press <ENTER> to continue...

```
1
 INTRA ERRORS

              0CC0531  2  ****** THIS CASE SHOWS A DOOR OR HATCH OR GATE OPENING
******         CC0532     ****** CHECK YOUR DATA AND IF CORRECT, NOTIFY YOUR ZONE
 ******        CC0533     DOOR LEFT FRONT IV05 equals 2 or IV06 equals 2 or IV07
equals 2       CC0534     or IV08 equals 2 or IV09 equals 2.

1
 INTRA ERRORS

              0HH1091  2  If TREATMENT OA35 equals 0, 4 or 5, then WORKING DAYS L
OST OA38       HH1092     should equal 00, 01, 97 or 99.

05152F00000011    926.0110000000000207350000003    92    92    93    92015367000
036110000554902
05152F00010012    926.0110000000000101F0201B
05152F00020012    926.0110000000000101T3100N
05152F00030012    926.0110000000000101R42000
05152F01000021      6.01 0000000007730036031773137561       14009655082410101019
00000490997997599 99 999999010
05152F01000022      6.01 0000000000000000000000000000     10313182015124
05152F01000031      6.01 000000000023100TDD005010212FYEW02                    056
061118161412-0111109450001
05152F01000041      6.01 00000000098220014600046060080000000001202000013010000
05152F01000042      6.01 000000000131741231932111231121221110621111521
              1            207999180
05152F01010051      6.01 0000000001816815011101132040000000000250000000000001410
003000000000500000102101
05152F01010161      6.01 0000000003NPTM1979799
05152F01010261      6.01 0000000003FILI1213100
05152F01010361      6.01 0000000003PLAI1213100
05152F01010461      6.01 0000000003LLAI1093100
05152F01010561      6.01 0000000003KRAI1103100
05152F02000021      6.01 0000000008047031049999999999999999900009655102510100027
00000009094082320+19-040486400
05152F02000022      6.01 0000000000000000000000000000     90000000025211
05152F99999999900000000000000000000000000000000000000000000000000000010000000010000
00000000000000
```

U.S. Department of Transportation
National Highway Traffic Safety Administration

SLIDE INDEX

NATIONAL ACCIDENT SAMPLING SYSTEM
CRASHWORTHINESS DATA SYSTEM

Primary Sampling Unit Number 0 5 | Case Number–Stratum 1 5 2 F

Slide No.	Vehicle No.	Direction of Picture	Description of Slide Subject Matter
1-2	1	East	Travel path and impact with V2
3-6	1	NE	Post trajectory path and rollover
7	1	SW	Lookback from final rest and rollover
8	1	West	Lookback from initial impact
9	1	West	Lookback from initial travel path
10-31	1		Exterior damage. Door failure with integrity loss
32-47	1		Interior photos
			Investigtor note: The location of the accident was
			verified by Trooper Skelton.

HS Form 434B (1/92)

PSU 05-152F (1992) # 1

PSU 05-152F (1992) #2

PSU 05-152F (1992) #3

PSU 05-152F (1992) # 4

PSU 05-152F (1992) # 5

PSU 05-152F (1992) # 6

PSU 05-152F (1992) #7

PSU 05-152F (1992) #8

PSU 05-152F (1992) #9

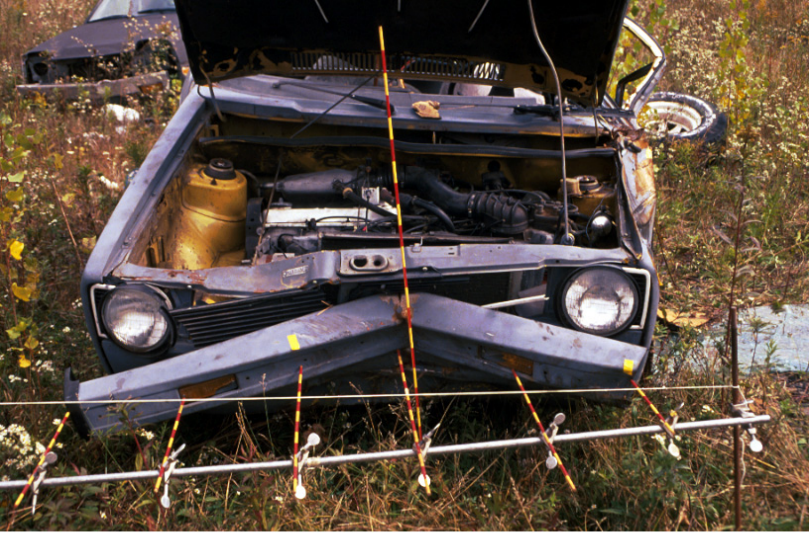

PSU 05-152F (1992) # 10

PSU 05-152F (1992) # 11

PSU 05-152F (1992) # 12

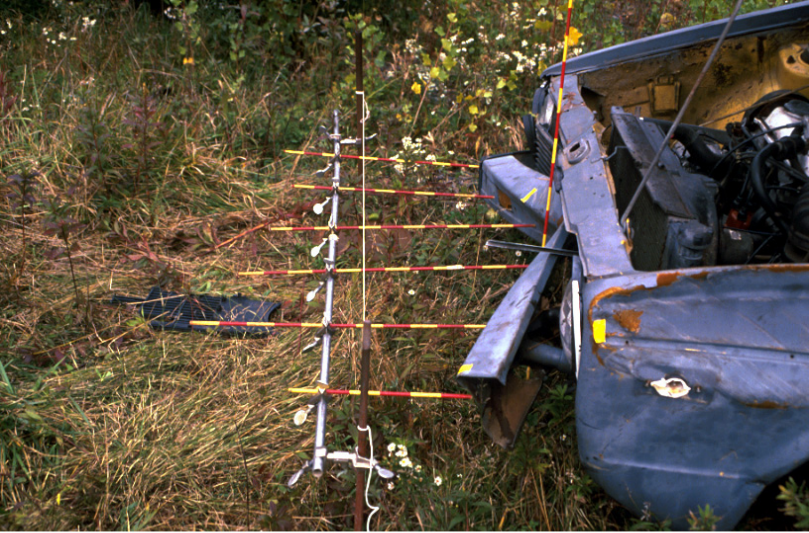

PSU 05-152F (1992) # 13

PSU 05-152F (1992) # 14

PSU 05-152F (1992) # 15

PSU 05-152F (1992) # 16

PSU 05-152F (1992) # 17

PSU 05-152F (1992) # 18

PSU 05-152F (1992) # 19

PSU 05-152F (1992) # 20

PSU 05-152F (1992) #21

PSU 05-152F (1992) # 22

PSU 05-152F (1992) # 23

PSU 05-152F (1992) # 24

PSU 05-152F (1992) # 25

PSU 05-152F (1992) # 26

PSU 05-152F (1992) # 27

PSU 05-152F (1992) # 28

PSU 05-152F (1992) # 29

PSU 05-152F (1992) #30

PSU 05-152F (1992) #31

PSU 05-152F (1992) # 32

PSU 05-152F (1992) # 33

PSU 05-152F (1992) # 34

PSU 05-152F (1992) # 35

PSU 05-152F (1992) #36
Best Available

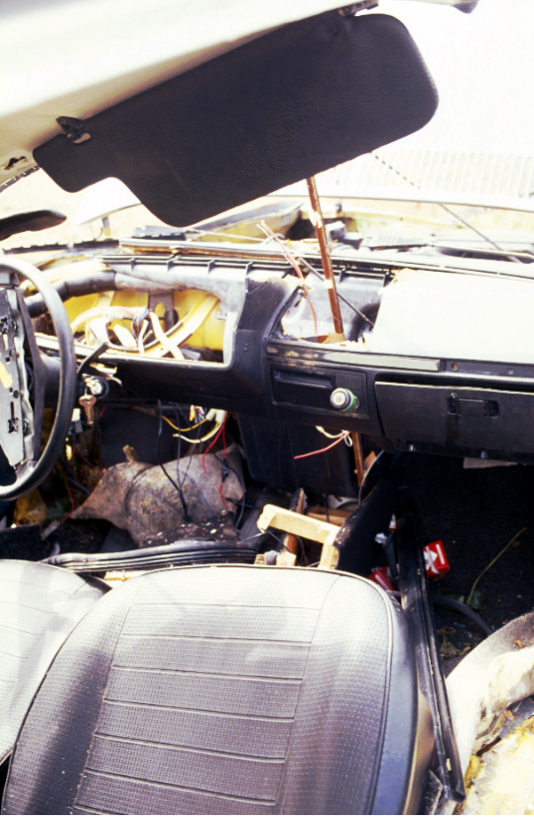

PSU 05-152F (1992) # 37

PSU 05-152F (1992) #38

PSU 05-152F (1992) #39
Best Available

PSU 05-152F (1992) # 40
Best Available

PSU 05-152F (1992) # 41
Best Available

PSU 05-152F (1992) # 42

PSU 05-152F (1992) # 43

PSU 05-152F (1992) # 44
Best Available

PSU 05-152F (1992) # 45

PSU 05-152F (1992) # 46

PSU 05-152F (1992) # 47