400 Seventh Street, S.W.
Washington, D.C. 20590

U.S. Department
of Transportation

**National Highway
Traffic Safety
Administration**

Dear Crash Data Researchers/Users:

Thank you for choosing crash data from the National Highway Traffic Safety Administration (NHTSA) for your research or other use. The information contained in this motor vehicle crash report is collected, maintained and distributed in accordance with Public Law 89-564. In accordance with this Public Law, NHTSA is required not to release any case information until completion of quality control procedures. These procedures include a review of the case material to extract all names, licenses and registration numbers, non-coded interview material, non-research related researcher comments in the margins, non-factual data, and the production number portion of the vehicle identification number (VIN).

If you requested NHTSA to query its database files in order to identify a specific crash, then that query was made using non-personal descriptors you provided for use in our search. This motor vehicle crash may have been identified from a data search and matches the general, non-personal descriptors you provided, but we cannot confirm that this is the specific crash report you requested.

If you have any questions with regard to the above procedures, please contact the Field Operations Branch, Crash Investigation Division, National Center for Statistics and Analysis at 202-366-4820. Again, please be advised that we cannot confirm that this is the case that you have specifically requested nor can we certify the information to be correct.

*** *** ***

Get it together!
SAFETY BELTS SAVE LIVES

AUTO SAFETY HOTLINE
(800) 424-9393
Wash. D.C. Area 366-0123

U.S. Department of Transportation
National Highway Traffic Safety Administration

CASE SUMMARY

NATIONAL ACCIDENT SAMPLING SYSTEM
CRASHWORTHINESS DATA SYSTEM

PSU 48 CASE NO. 122A TYPE OF ACCIDENT Car-Ran off Road

A. DESCRIPTION OF THE ACCIDENT SEQUENCE AND ACCIDENT PECULIARITIES

(Provide a summary of the accident sequence as well as any particular event of the accident that is noteworthy. Injury mechanism and vehicle crashworthiness is the focus, not driver culpability. **Do not include any personal identifiers.** Use reverse side if needed.)

V1 was northbound on a two lane roadway, negoiating a left hand curve. V1 went into a counter-clockwise yaw and departed the left side of the roadway. V1 crossed a concrete drainage ditch and impacted an embankment. V1 rolled over onto its right side and slid back onto the roadway. The driver was ejected through the right side window. She was pronounced dead at the scene.

B. VEHICLE PROFILE(S)

Vehicle No.	Class of Vehicle	Year/Make/Model	Most Severe Damage		Component Failure
			Damage Plane	Severity Description	
1	Compact	91/BMW/318i	Front	Moderate	None

C. PERSON PROFILE(S)

Vehicle No.	Person Role	Seat Position	Restraint Use	Most Severe Injury			
				Body Region	Lesion	AIS	Injury Source
1	Driver	Front Left	Airbag	Head	Crushed	6	Vehicle Exterior

DO NOT SANITIZE THIS FORM

U.S. Department of Transportation
National Highway Traffic Safety Administration

NATIONAL ACCIDENT SAMPLING SYSTEM
CRASHWORTHINESS DATA SYSTEM

ACCIDENT COLLISION DIAGRAM

PSU No. 4 B
Case Number–Stratum 1 2 2 A

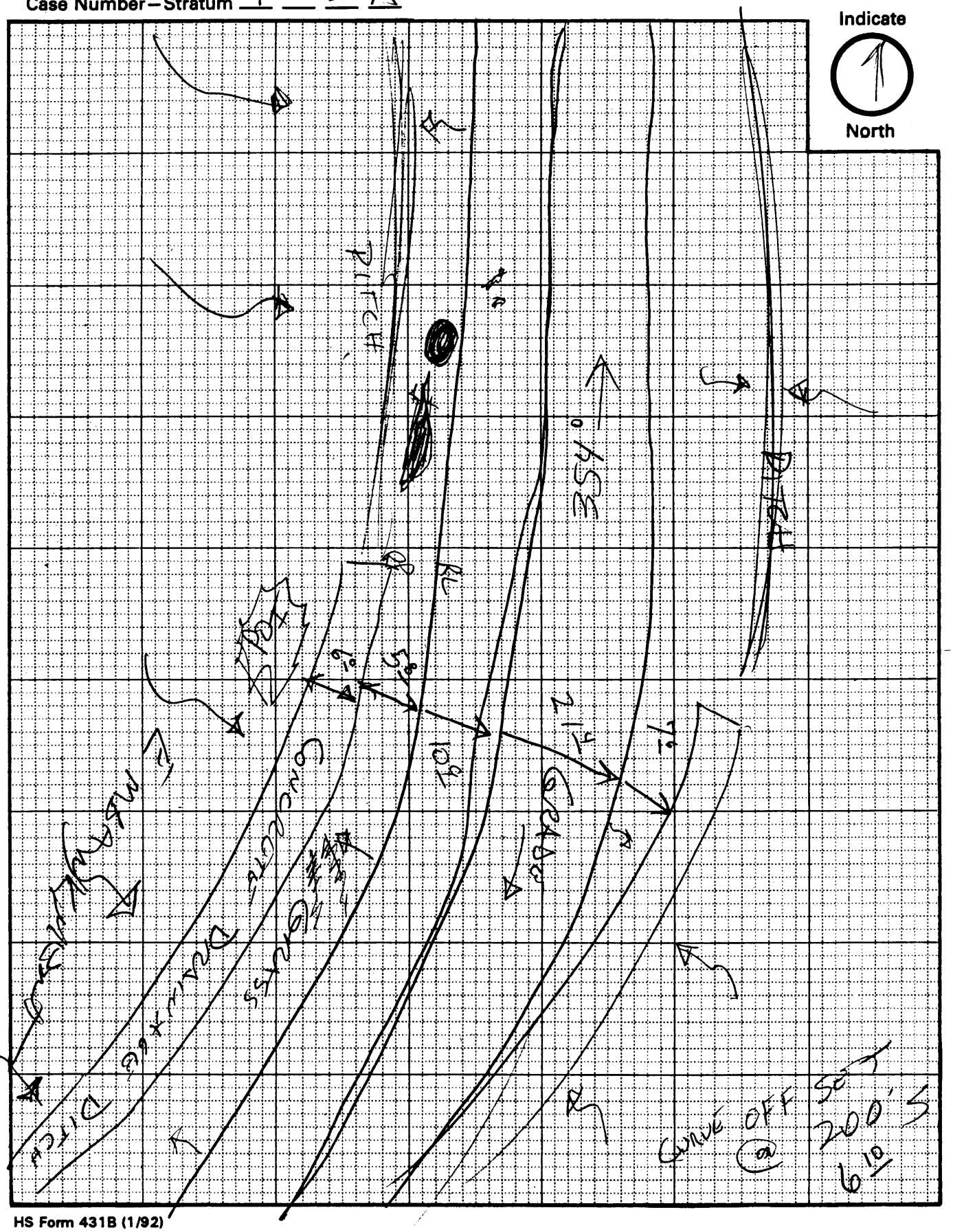

HS Form 431B (1/92)

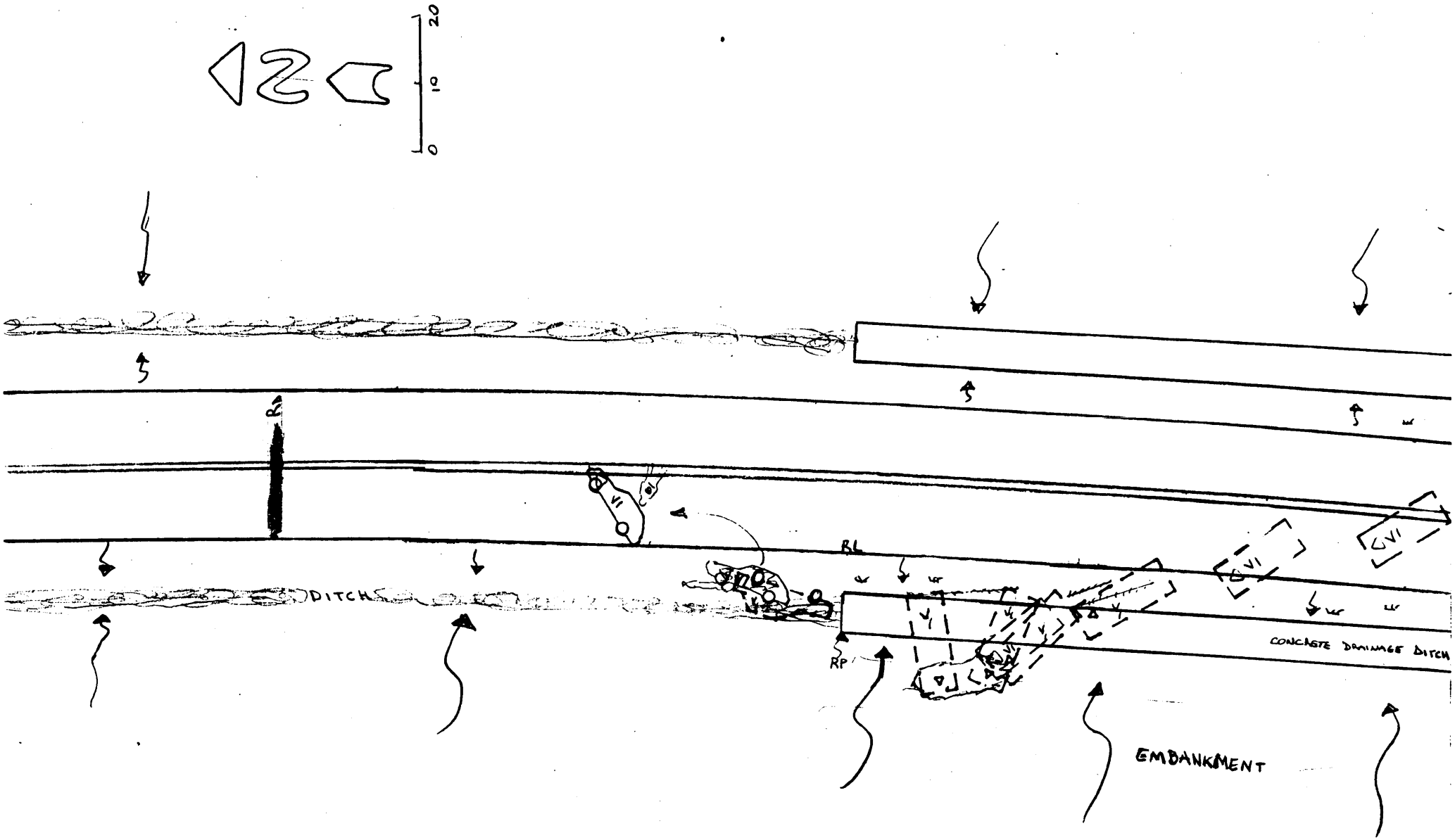

NASS PSU 48	CASE NO. 122A	RESEACHER NO. [redacted]	SCALE 1"=20'

U.S. Department of Transportation
National Highway Traffic Safety Administration

ACCIDENT COLLISION MEASUREMENT TABLE

BEST AVAILABLE COPY

NATIONAL ACCIDENT SAMPLING SYSTEM
CRASHWORTHINESS DATA SYSTEM

Primary Sampling Unit Number 48 Case Number—Stratum 1 2 2 A

ACCIDENT COLLISION DIAGRAM

LEVEL I
PHYSICAL EVIDENCE ABSENT

To be accomplished when there is no physical evidence present at the scene:

- approximate vehicle orientation at impact and final rest
- applicable road/roadway delineation (e.g., curbs/edge lines, lane markings, median markings, pavement markings, etc.)
- applicable traffic controls (e.g., speed limit)
- north arrow placed on diagram
- sketch required

LEVEL II
PHYSICAL EVIDENCE PRESENT

In addition to the level I tasks noted above, the following must be accomplished when

LEVEL II (Cont'd)
physical evidence is present:

- document reference point and reference line relative to physical features present at the scene
- scale documentation of all accident induced physical evidence
- scaled documentation of all roadside objects contacted
- roadway surface type and condition of applicable roadways
- grade measurements for all applicable roadways and at location of rollover initiation
- scaled representations of the vehicle(s) at pre-impact, impact, and final rest based upon either:
  - a) physical evidence, or
  - b) reconstructed accident dynamics

CRASH DATA

	VEH. #1	VEH. #2	VEH. #3
Heading Angle	354°		
Surface Type	ASPHALT		
Surface Condition	WET / SLIGHTLY WORN		
Grade (v/h) Measurement (between impact and final rest)	23/48		
Grade (v/h) Measurement (at location of rollover initiation)	11/48 → DITCH SLOPE; 23/48 BACK SLOPE & EMBANKMENT		

Reference Point: END OF CONCRETE DRAINAGE DITCH

Reference line:

Item	Distance and Direction from Reference Point	Distance and Direction from Reference Line
V1 OFF ROAD RF RR	37.8 → 33.3	2.3 → 4.6
	45.3 → 38.8	1.2 → 4.4
V1 POI w/EMBANKMENT	25.8 → 14.7	13.2 → 17.6
GOUGE REAR BUMPER	24.11 → 9.4.5	3.5 → 6.11
GOUGES ROLLOVER	12.9 → 24.0	2.1 → 5.3
FR SPILL	28.2 → 32.1	0.8 → 2.9
GOUGE 3 IN ROAD #1	33.1	5.4
	35.4	5.7

HS Form 431A (1.92)

PC APPROX 65.0

Item	Distance and Direction from Reference Point	Distance and Direction from Reference Line

U.S. Department of Transportation
National Highway Traffic Safety Administration

ACCIDENT FORM

NATIONAL ACCIDENT SAMPLING SYSTEM
CRASHWORTHINESS DATA SYSTEM

1. Primary Sampling Unit Number 4 8
2. Case Number - Stratum 1 2 2 A

IDENTIFICATION

3. Number of General Vehicle Forms Submitted 0 1
4. Date of Accident (Month,Day,Year) [redacted] / [redacted] / 9 2
5. Time of Accident 0 7 1 3

Code reported military time of accident.

NOTE: Midnight = 2400
Unknown = 9999

SPECIAL STUDIES - INDICATORS

Check (✓) each special study (SS12-SS16 below) that has been completed; code 1 for the checked special studies and 0 for the special studies not checked.

6. ___ SS12 Not Active 0
7. ___ SS13 Not Active 0
8. ___ SS14 Fatal AOPS 1 ☒
9. ___ SS15 _____ 0
10. ___ SS16 _____ 0

NUMBER OF EVENTS

11. Number of Recorded Events in This Accident 0 2

Code the number of events which occurred in this accident.

ACCIDENT EVENTS

For each event that occurred in the accident, code the lowest numbered vehicle in the left columns and the other involved vehicle or object on the right.

Accident Event Sequence Number	Vehicle Number	Class Of Vehicle	General Area of Damage	Vehicle Number or Object Contacted	Class Of Vehicle	General Area of Damage
12. 0 1	13. 01	14. 02	15. F	16. 44	17. 00	18. 0
19. 0 2	20. 01	21. 02	22. R	23. 31	24. 00	25. N
26. 0 3	27.	28.	29.	30.	31.	32.
33. 0 4	34.	35.	36.	37.	38.	39.
40. 0 5	41.	42.	43.	44.	45.	46.

IF GREATER THAN FIVE EVENTS, CONTINUE CODING ON THE ACCIDENT EVENT SUPPLEMENT

CODES FOR CLASS OF VEHICLE

(00) Not a motor vehicle
(01) Subcompact/mini (wheelbase < 100 inches)
(02) Compact (wheelbase = 100 – 104 inches)
(03) Intermediate (wheelbase = 105 – 109 inches)
(04) Full size (wheelbase = 110 – 114 inches)
(05) Largest (wheelbase ≥ 115 inches)
(09) Unknown passenger car size
(11) Compact utility vehicle
(12) Large utility vehicle (≤ 10,000 lbs GVWR)
(13) Passenger van (≤ 10,000 lbs GVWR)
(14) Other van (≤ 10,000 lbs GVWR)
(15) Pickup truck (≤ 10,000 lbs GVWR)
(18) Other truck (≤ 10,000 lbs GVWR)
(19) Unknown light truck type
(20) School bus
(21) Other bus
(22) Truck (> 10,000 lbs GVWR)
(23) Tractor without trailer
(24) Tractor-trailer(s)
(25) Motored cycle
(28) Other vehicle
(99) Unknown

CODES FOR GENERAL AREA OF DAMAGE (GAD)

CDS APPLICABLE AND OTHER VEHICLES

(0) Not a motor vehicle
(N) Noncollision
(F) Front
(R) Right side
(L) Left side
(B) Back
(T) Top
(U) Undercarriage
(9) Unknown

TDC APPLICABLE VEHICLES

(0) Not a motor vehicle
(N) Noncollision
(F) Front
(R) Right side
(L) Left side
(B) Back of unit with cargo area (rear of trailer or straight truck)
(D) Back (rear of tractor)
(C) Rear of cab
(V) Front of cargo area
(T) Top
(U) Undercarriage
(9) Unknown

CODES FOR VEHICLE NUMBER OR OBJECT CONTACTED

(01-30) — Vehicle Number

Noncollision
(31) Overturn — rollover
(32) Fire or explosion
(33) Jackknife
(34) Other intraunit damage (specify): _____
(35) Noncollision injury
(38) Other noncollision (specify): _____
(39) Noncollision — details unknown

Collision With Fixed Object
(41) Tree (≤ 4 inches in diameter)
(42) Tree (> 4 inches in diameter)
(43) Shrubbery or bush
(44) Embankment
(45) Breakaway pole or post (any diameter)

Nonbreakaway Pole or Post
(50) Pole or post (≤ 4 inches in diameter)
(51) Pole or post (> 4 inches but ≤ 12 inches in diameter)
(52) Pole or post (> 12 inches in diameter)
(53) Pole or post (diameter unknown)
(54) Concrete traffic barrier
(55) Impact attenuator
(56) Other traffic barrier (includes guardrail) (specify): _____
(57) Fence
(58) Wall
(59) Building
(60) Ditch or culvert
(61) Ground
(62) Fire hydrant
(63) Curb
(64) Bridge
(68) Other fixed object (specify): _____
(69) Unknown fixed object

Collision with Nonfixed Object
(71) Motor vehicle not in-transport
(72) Pedestrian
(73) Cyclist or cycle
(74) Other nonmotorist or conveyance _____
(75) Vehicle occupant
(76) Animal
(77) Train
(78) Trailer, disconnected in transport
(88) Other nonfixed object (specify): _____
(89) Unknown nonfixed object

(98) Other event (specify): _____
(99) Unknown event or object

48-122A

OCCUPANT RELATED

16. Driver Presence in Vehicle 1
    (0) Driver not present
    (1) Driver present
    (9) Unknown

17. Number of Occupants This Vehicle 01
    (00-96) Code actual number of occupants for this vehicle
    (97) 97 or more
    (99) Unknown

18. Number of Occupant Forms Submitted 01

VEHICLE WEIGHT ITEMS

19. Vehicle Curb Weight 02,600
    2635 Code weight to nearest 100 pounds.
    (010) Less than 1050 pounds
    (135) 13,500 pounds or more
    (999) Unknown

    Source: 1991 [redacted]

20. Vehicle Cargo Weight 0,000
    ____ Code weight to nearest 100 pounds.
    (00) Less than 50 pounds
    (97) 9,650 pounds or more
    (99) Unknown

RECONSTRUCTION DATA

21. Towed Trailing Unit 0
    (0) No towed unit
    (1) Yes—towed trailing unit
    (9) Unknown

22. Documentation of Trajectory Data for This Vehicle 1
    (0) No
    (1) Yes

23. Post Collision Condition of Tree or Pole (For Highest Delta V) 0
    (0) Not collision (for highest delta V) with tree or pole
    (1) Not damaged
    (2) Cracked/sheared
    (3) Tilted <45 degrees
    (4) Tilted ≥45 degrees
    (5) Uprooted tree
    (6) Separated pole from base
    (7) Pole replaced
    (8) Other (specify): _____
    (9) Unknown

24. Rollover 1
    (0) No rollover (no overturning)

    Rollover (primarily about the longitudinal axis)
    (1) Rollover, 1 quarter turn only
    (2) Rollover, 2 quarter turns
    (3) Rollover, 3 quarter turns
    (4) Rollover, 4 or more quarter turns (specify): _____

    (5) Rollover--end-over-end (i.e., primarily about the lateral axis)
    (9) Rollover (overturn), details unknown

OVERRIDE/UNDERRIDE (THIS VEHICLE)

25. Front Override/Underride (this Vehicle) 0

26. Rear Override/Underride (this Vehicle) 0

    (0) No override/underride, or not an end-to-end impact

    Override (see specific CDC)
    (1) 1st CDC
    (2) 2nd CDC
    (3) Other not automated CDC (specify): _____

    Underride (see specific CDC)
    (4) 1st CDC
    (5) 2nd CDC
    (6) Other not automated CDC (specify): _____

    (7) Medium/heavy truck or bus override
    (9) Unknown

HEADING ANGLE AT IMPACT FOR HIGHEST DELTA V

Values: (000)-(359) Code actual value
(997) Noncollision
(998) Impact with object
(999) Unknown

27. Heading Angle For This Vehicle 998

28. Heading Angle For Other Vehicle 998

48-122A
V-01

Category	Configuration	ACCIDENT TYPES (Includes Intent)
I. Single Driver	A. Right Roadside Departure	01 DRIVE OFF ROAD; 02 CONTROL/ TRACTION LOSS; 03 AVOID COLLISION WITH VEH., PED., ANIM.; 04 SPECIFICS OTHER; 05 SPECIFICS UNKNOWN
	B. Left Roadside Departure	06 DRIVE OFF ROAD; 07 CONTROL/ TRACTION LOSS; 08 AVOID COLLISION WITH VEH., PED., ANIM.; 09 SPECIFICS OTHER; 10 SPECIFICS UNKNOWN
	C. Forward Impact	11 PARKED VEH.; 12 STA. OBJECT; 13 PEDESTRIAN/ ANIMAL; 14 END DEPARTURE; 15 SPECIFICS OTHER; 16 SPECIFICS UNKNOWN
II. Same Trafficway Same Direction	D. Rear-End	20, 22, 21, 23 STOPPED 21, 22, 23; 24, 26, 25, 27 SLOWER 25, 26, 27; 28, 30, 29, 31 DECEL. 29, 30, 31; (EACH • 32) SPECIFICS OTHER; (EACH • 33) SPECIFICS UNKNOWN
	E. Forward Impact	34, 35 CONTROL/ TRACTION LOSS; 36, 37 CONTROL/ TRACTION LOSS; 38, 39 AVOID COLLISION WITH VEH.; 40, 41 AVOID COLLISION WITH OBJECT; (EACH • 42) SPECIFICS OTHER; (EACH • 43) SPECIFICS UNKNOWN
	F. Sideswipe Angle	44, 45 LATERAL MOVE; 46, 45, 47; (EACH • 48) SPECIFICS OTHER; (EACH • 49) SPECIFICS UNKNOWN
III. Same Trafficway Opposite Direction	G. Head-On	50, 51 LATERAL MOVE; (EACH • 52) SPECIFICS OTHER; (EACH • 53) SPECIFICS UNKNOWN
	H. Forward Impact	54, 55 CONTROL/ TRACTION LOSS; 56, 57 CONTROL/ TRACTION LOSS; 58, 59 AVOID COLLISION WITH VEH.; 60, 61 AVOID COLLISION WITH OBJECT; (EACH • 62) SPECIFICS OTHER; (EACH • 63) SPECIFICS UNKNOWN
	I. Sideswipe/ Angle	64, 65 LATERAL MOVE; (EACH • 66) SPECIFICS OTHER; (EACH • 67) SPECIFICS UNKNOWN
IV. Change Trafficway Vehicle Turning	J. Turn Across Path	68, 69 INITIAL OPPOSITE DIRECTIONS; 71, 70 INITIAL SAME DIRECTIONS; 73, 72; (EACH • 74) SPECIFICS OTHER; (EACH • 75) SPECIFICS UNKNOWN
	K. Turn Into Path	76, 77 TURN INTO SAME DIRECTION; 79, 78 TURN INTO SAME DIRECTION; 80, 81 TURN INTO OPPOSITE DIRECTIONS; 83, 82 TURN INTO OPPOSITE DIRECTIONS; (EACH • 84) SPECIFICS OTHER; (EACH • 85) SPECIFICS UNKNOWN
V. Intersecting Paths (Vehicle Damage)	L. Straight Paths	87, 86; 88, 89; (EACH • 90) SPECIFICS OTHER; (EACH • 91) SPECIFICS UNKNOWN
VI. Miscellaneous	M. Backing Etc.	92 BACKING VEH.; 93 OTHER VEH. OR OBJECT; 98 Other Accident Type; 99 Unknown Accident Type; 00 No Impact

OTHER DATA

56. Driver's Zip Code [redacted]

(00000) Driver not present
(00001) Driver not a resident of U.S. or territories
_____ Code actual 5-digit zip code
(99999) Unknown

57. Driver's Race/Ethnic Origin 1
(0) Driver not present
(1) White (non-Hispanic)
(2) Black (non-Hispanic)
(3) White (Hispanic)
(4) Black (Hispanic)
(5) American Indian, Eskimo or Aleut
(6) Asian or Pacific Islander
(8) Other (specify):
_____
(9) Unknown

58. Vehicle Special Use (This Trip) 0
(0) No special use
(1) Taxi
(2) Vehicle used as school bus
(3) Vehicle used as other bus
(4) Military
(5) Police
(6) Ambulance
(7) Hearse
(8) Fire truck or car
(9) Unknown

ROLLOVER DATA

If GV07 (Body Type) ≠ 1-49, leave GV59-GV63 blank.
If GV24 (Rollover) = 0, then GV59-GV63 must equal 0.
If GV24 = 9, then GV59-GV63 must equal 9.

59. Rollover Initiation Type 2
(0) No rollover
(1) Trip-over
(2) Flip-over
(3) Turn-over
(4) Climb-over
(5) Fall-over
(6) Bounce-over
(7) Collision with another vehicle
(8) Other rollover initiation type specify):
_____
(9) Unknown rollover initiation type

60. Location of Rollover Initiation 4
(0) No rollover
(1) On roadway
(2) On shoulder—paved
(3) On shoulder—unpaved
(4) On roadside or divided trafficway median
(9) Unknown

61. Rollover Initiation Object Contacted 4 4

62. Location on Vehicle Where Initial Principal Tripping Force Is Applied ~~3~~ 4

MASS Cong Dist
1st Rev 3 A
2nd Rev 3 –

(0) No rollover
(1) Wheels/tires
(2) Side plane
(3) End plane
(4) Undercarriage
(5) Other location on vehicle (specify):
_____
(8) Non-contact rollover forces (specify):
_____
(9) Unknown

63. Direction of Initial Roll 1
(0) No rollover
(1) Roll right - primarily about the longitudinal axis
(2) Roll left - primarily about the longitudinal axis
(5) End-over-end (i.e., primarily about the lateral axis)
(9) Unknown roll direction

PRECRASH DATA

64. Pre-Event Movement (Prior to Recognition of Critical Event) 1 3
(01) Going straight
(02) Slowing or stopping in traffic lane
(03) Starting in traffic lane
(04) Stopped in traffic lane
(05) Passing or overtaking another vehicle
(06) Disabled or parked in travel lane
(07) Leaving a parking position
(08) Entering a parking position
(09) Turning right
(10) Turning left
(11) Making a U-turn
(12) Backing up (other than for parking position)
(13) Negotiating a curve
(14) Changing lanes
(15) Merging
(16) Successful avoidance maneuver to a previous critical event
(97) Other (specify):
_____
(98) No driver present
(99) Unknown

48-122A
V-01

CODES FOR ROLLOVER INITIATION OBJECT CONTACTED

(00) No rollover
(01-30) — Vehicle Number

Noncollision
(31) Turn-over — fall-over
(33) Jackknife

Collision With Fixed Object
(41) Tree (≤ 4 inches in diameter)
(42) Tree (> 4 inches in diameter)
(43) Shrubbery or bush
(44) Embankment

(45) Breakaway pole or post (any diameter)

Nonbreakaway Pole or Post
(50) Pole or post (≤ 4 inches in diameter)
(51) Pole or post (> 4 inches but ≤ 12 inches in diameter)
(52) Pole or post (> 12 inches in diameter)
(53) Pole or post (diameter unknown)

(54) Concrete traffic barrier
(55) Impact attenuator
(56) Other traffic barrier (includes guardrail) (specify):_____
(57) Fence
(58) Wall
(59) Building
(60) Ditch or culvert
(61) Ground
(62) Fire hydrant
(63) Curb
(64) Bridge
(68) Other fixed object (specify):
_____
(69) Unknown fixed object

Collision with Nonfixed Object
(71) Motor vehicle not in-transport
(76) Animal
(77) Train
(78) Trailer, disconnected in transport
(88) Other nonfixed object (specify):
_____
(89) Unknown nonfixed object

(98) Other event (specify):
_____
(99) Unknown event or object

U.S. Department of Transportation
National Highway Traffic Safety Administration

EXTERIOR VEHICLE FORM

NATIONAL ACCIDENT SAMPLING SYSTEM
CRASHWORTHINESS DATA SYSTEM

1. Primary Sampling Unit Number: 48
2. Case Number - Stratum: 122A
3. Vehicle Number: 01

VEHICLE IDENTIFICATION

VIN: WBAAJ9317ME[redacted] Model Year: 91

Vehicle Make (specify): BMW Vehicle Model (specify): 318i

LOCATOR

Locate the end of the damage with respect to the vehicle longitudinal center line or bumper corner for end impacts or an undamaged axle for side impacts.

Specific Impact No.	Location of Direct Damage	Location of Field L
1	ENTIRE FRONT BUMPER	SAME
2	ENTIRE RIGHT SIDE	SAME

CRUSH PROFILE

NOTES: Identify the plane at which the C-measurements are taken (e.g., at bumper, above bumper, at sill, above sill, etc.) and label adjustments (e.g., free space).

Measure and document on the vehicle diagram the location of maximum crush.

Measure C1 to C6 from driver to passenger side in front or rear impacts and rear to front in side impacts.

Free space value is defined as the distance between the baseline and the original body contour taken at the individual C locations. This may include the following: bumper lead, bumper taper, side protrusion, side taper, etc. Record the value for each C-measurement and maximum crush.

Use as many lines/columns as necessary to describe each damage profile.

Specific Impact Number	Plane of Impact C-Measurements	Direct Damage Width (CDC)	Direct Damage Max Crush	Field L	C_1	C_2	C_3	C_4	C_5	C_6	±D
1	BUMPER SUPPORT	58	53	53	16.75	12.5	9.25	7.5	7.0	7.0	0
	FREE SPACE				3.0	2.0	1.5	1.5	2.0	3.0	
	FINAL				13.75	10.5	7.75	6.0	5.0	4.0	
2	SIDE		3"		ROLLOVER						

48-122A
V1

VEHICLE DAMAGE SKETCH

TIRE—WHEEL DAMAGE

a. Rotation physically restricted

b. Tire deflated

	a.	b.
RF	1	1
LF	1	2
RR	2	2
LR	2	2

CONTROL ARM BROKEN

(1) Yes (2) No (8) NA (9) Unk.

TYPE OF TRANSMISSION

☒ Manual ☐ Automatic

ORIGINAL SPECIFICATIONS

Wheelbase	101.2
Overall Length	170.3
Maximum Width	64.8
Curb Weight	2635
Average Track	55.5
Front Overhang	29.1
Rear Overhang	40.0
Engine Size: cyl./displ.	4/–
Undeformed End Width	58

WHEEL STEER ANGLES

(For locked front wheels or displaced rear axles only)

RF ±	10	°
LF ±	15	°
RR ±		°
LR ±		°

Within ± 5 degrees

DRIVE WHEELS

☒ FWD ☐ RWD ☐ 4WD

Approximate Cargo Weight 0

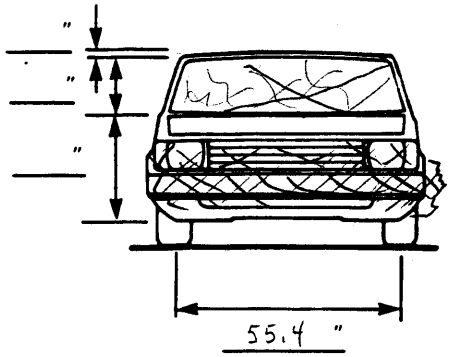

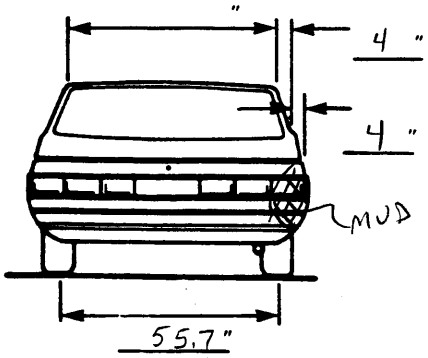

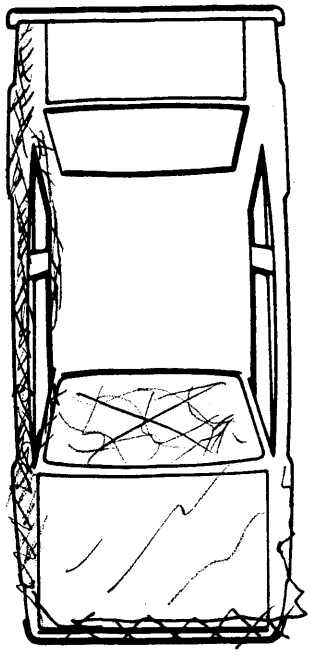

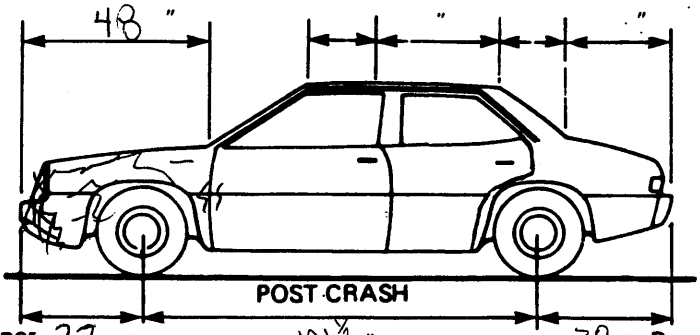

Bumper corner 22 " Stringline 29 "

38 " Bumper corner 39½" Stringline

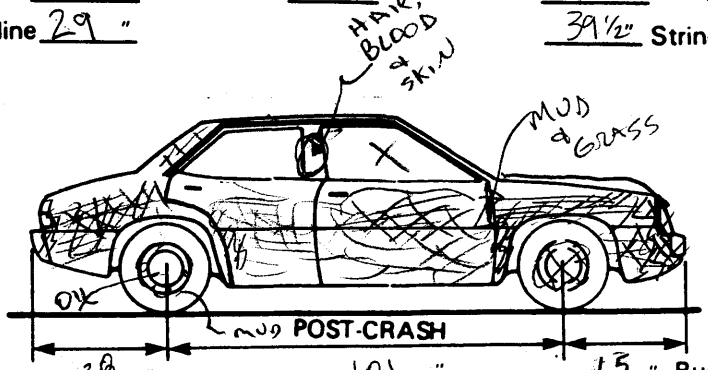

Bumper corner 38 " Stringline 39½"

15 " Bumper corner 29½" Stringline

NOTES: Sketch new perimeter and cross hatch direct damage and single hatch induced damage on all views. Annotate observations which might be useful in reconstructing the accident (e.g., grass in tire bead, direction of striations, scuff on sidewalls, etc.). If pulling trailer, sketch type of trailer and damage received on the back of this page.

Annotate any damage caused by extrication such as component removal by torching, prying, or hydraulic shears.

CDC WORKSHEET

CODES FOR OBJECT CONTACTED

(01-30) — Vehicle Number

Noncollision
- (31) Overturn — rollover
- (32) Fire or explosion
- (33) Jackknife
- (34) Other intraunit damage (specify): _____
- (35) Noncollision injury
- (38) Other noncollision (specify): _____
- (39) Noncollision — details unknown

Collision With Fixed Object
- (41) Tree (≤ 4 inches in diameter)
- (42) Tree (> 4 inches in diameter)
- (43) Shrubbery or bush
- (44) Embankment
- (45) Breakaway pole or post (any diameter)

Nonbreakaway Pole or Post
- (50) Pole or post (≤ 4 inches in diameter)
- (51) Pole or post (> 4 inches but ≤ 12 inches in diameter)
- (52) Pole or post (> 12 inches in diameter)
- (53) Pole or post (diameter unknown)
- (54) Concrete traffic barrier
- (55) Impact attenuator
- (56) Other traffic barrier (includes guardrail) (specify): _____
- (57) Fence
- (58) Wall
- (59) Building
- (60) Ditch or culvert
- (61) Ground
- (62) Fire hydrant
- (63) Curb
- (64) Bridge
- (68) Other fixed object (specify): _____
- (69) Unknown fixed object

Collision with Nonfixed Object
- (71) Motor vehicle not in-transport
- (72) Pedestrian
- (73) Cyclist or cycle
- (74) Other nonmotorist or conveyance _____
- (75) Vehicle occupant
- (76) Animal
- (77) Train
- (78) Trailer, disconnected in transport
- (88) Other nonfixed object (specify): _____
- (89) Unknown nonfixed object
- (98) Other event (specify): _____
- (99) Unknown event or object

DEFORMATION CLASSIFICATION BY EVENT NUMBER

Accident Event Sequence Number	Object Contacted	(1) (2) Direction of Force (degrees)	Incremental Value of Shift	(3) Deformation Location	(4) Specific Longitudinal or Lateral Location	(5) Specific Vertical or Lateral Location	(6) Type of Damage Distribution	(7) Deformation Extent
01	44	20	00	F	D	E	W	02
03	31	000	00	R	D	A	O	02

U.S. Department of Transportation
National Highway Traffic Safety Administration

INTERIOR VEHICLE FORM

NATIONAL ACCIDENT SAMPLING SYSTEM
CRASHWORTHINESS DATA SYSTEM

1. Primary Sampling Unit Number 4 8
2. Case Number - Stratum 1 2 2 A
3. Vehicle Number 0 1

INTEGRITY

4. Passenger Compartment Integrity 1 2

(00) No integrity loss

Yes, Integrity Was Lost Through
(01) Windshield
(02) Door (side)
(03) Door/hatch (back door)
(04) Roof
(05) Roof glass
(06) Side window
(07) Rear window (backlight)
(08) Roof and roof glass
(09) Windshield and door (side)
(10) Windshield and roof
(11) Side and rear window (side window and backlight)
(12) Windshield and side window
(13) Door and side window
(98) Other combination of above (specify): _____
(99) Unknown

Door, Tailgate or Hatch Opening

5. LF 1 6. RF 3 7. LR 1 8. RR 3 9. TG/H 0

(0) No door/gate/hatch
(1) Door/gate/hatch remained closed and operational
(2) Door/gate/hatch came open during collision
(3) Door/gate/hatch jammed shut
(8) Other (specify): _____
(9) Unknown

Damage/Failure Associated with Door, Tailgate or Hatch Opening in Collision. If IV05-IV09 ≠ 2, Then code Ø

10. LF 0 11. RF 0 12. LR 0 13. RR 0 14. TG/H 0

(0) No door/gate/hatch or door not opened

Door, Tailgate or Hatch Came Open During Collision
(1) Door operational (no damage)
(2) Latch/striker failure due to damage
(3) Hinge failure due to damage
(4) Door structure failure due to damage
(5) Door support (i.e., pillar, sill, roof side rail, etc.) failure due to damage
(6) Latch/striker and hinge failure due to damage
(8) Other failure (specify): _____
(9) Unknown

GLAZING

Glazing Damage from Impact Forces

15. WS 4 16. LF 0 17. RF 6 18. LR 0 19. RR 0
20. BL 0 21. Roof 8 22. Other 0

(0) No glazing damage from impact forces
(2) Glazing in place and cracked from impact forces
(3) Glazing in place and holed from impact forces
(4) Glazing out-of-place (cracked or not) and not holed from impact forces
(5) Glazing out-of-place and holed from impact forces
(6) Glazing disintegrated from impact forces
(7) Glazing removed prior to accident
(8) No glazing
(9) Unknown if damaged

Glazing Damage from Occupant Contact

23. WS 0 24. LF 0 25. RF 9 26. LR 0 27. RR 0
28. BL 0 29. Roof 0 30. Other 0

(0) No occupant contact to glazing or no glazing
(1) Glazing contacted by occupant but no glazing damage
(2) Glazing in place and cracked by occupant contact
(3) Glazing in place and holed by occupant contact
(4) Glazing out-of-place (cracked or not) by occupant contact and not holed by occupant contact
(5) Glazing out-of-place by occupant contact and holed by occupant contact
(6) Glazing disintegrated by occupant contact
(9) Unknown if contacted by occupant

If No Glazing Damage ***And*** No Occupant Contact or No Glazing, Then Code IV31 Through IV46 As Ø

Type of Window/Windshield Glazing

31. WS 1 32. LF 0 33. RF 2 34. LR 0 35. RR 0
36. BL 0 37. Roof 0 38. Other 0

(0) No glazing contact and no damage, or no glazing
(1) AS-1 — Laminated
(2) AS-2 — Tempered
(3) AS-3 — Tempered-tinted
(4) AS-14 — Glass/Plastic
(8) Other (specify): _____
(9) Unknown

Window Precrash Glazing Status

39. WS 1 40. LF 0 41. RF 2 42. LR 0 43. RR 0
44. BL 0 45. Roof 0 46. Other 0

(0) No glazing contact and no damage, or no glazing
(1) Fixed
(2) Closed
(3) Partially opened
(4) Fully opened
(9) Unknown

INTRUSION WORKSHEET

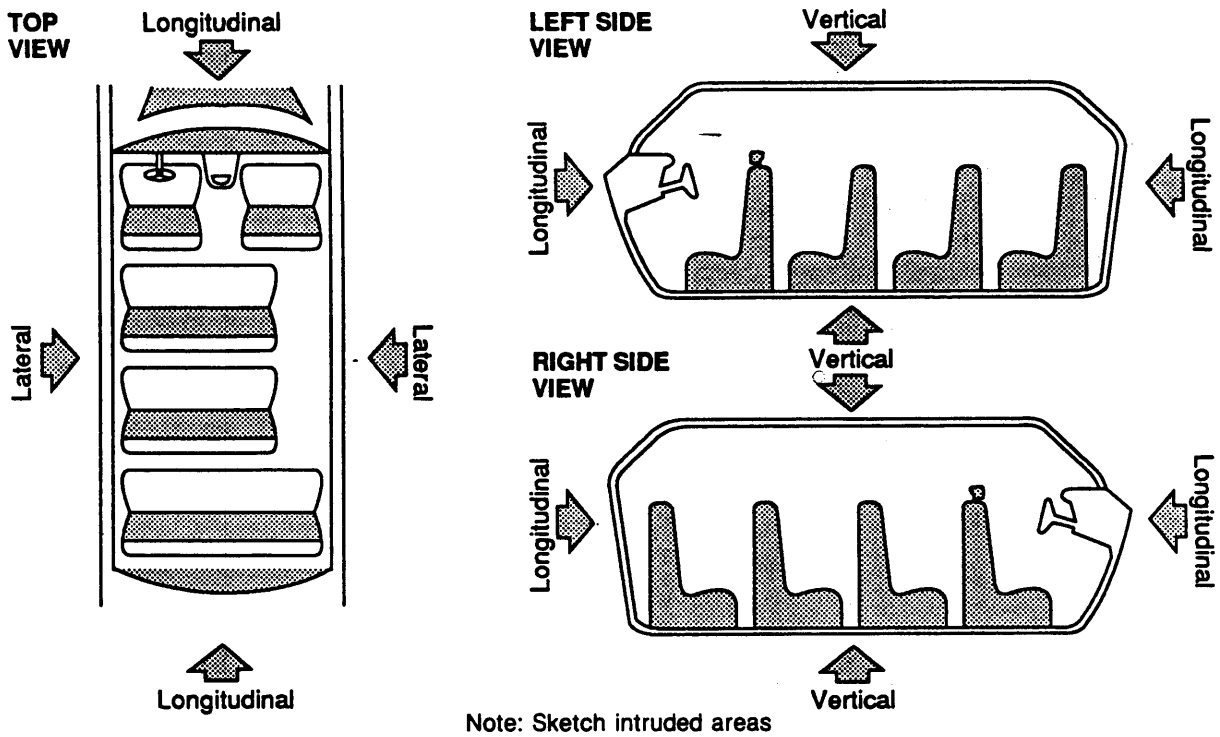

Note: Sketch intruded areas

LOCATION OF INTRUSION	INTRUDED COMPONENT	COMPARISON VALUE	–	INTRUDED VALUE	=	INTRUSION	DOMINANT CRUSH DIRECTION
RF	DOOR PANEL	24 ½	–	22	=	1.5	LAT
	A - PILLAR	20	–	20	=	Ø	
	KICK PANEL	18	–	18	=	Ø	
	B- PILLAR	28	–	28	=	Ø	
			–		=		
			–		=		
			–		=		
			–		=		
			–		=		
			–		=		
			–		=		
			–		=		
			–		=		
			–		=		
			–		=		

Document no more than the 15 most severe intrusions

OCCUPANT AREA INTRUSION

Note: If no intrusions, leave variables IV47-IV86 blank.

	Location of Intrusion	Intruding Component	Magnitude of Intrusion	Dominant Crush Direction
1st	47. 1 3	48. 1 0	49. 1	50. 3
2nd	51. ___ ___	52. ___ ___	53. ___	54. ___
3rd	55. ___ ___	56. ___ ___	57. ___	58. ___
4th	59. ___ ___	60. ___ ___	61. ___	62. ___
5th	63. ___ ___	64. ___ ___	65. ___	66. ___
6th	67. ___ ___	68. ___ ___	69. ___	70. ___
7th	71. ___ ___	72. ___ ___	73. ___	74. ___
8th	75. ___ ___	76. ___ ___	77. ___	78. ___
9th	79. ___ ___	80. ___ ___	81. ___	82. ___
10th	83. ___ ___	84. ___ ___	85. ___	86. ___

LOCATION OF INTRUSION

Front Seat
- (11) Left
- (12) Middle
- (13) Right

Second Seat
- (21) Left
- (22) Middle
- (23) Right

Third Seat
- (31) Left
- (32) Middle
- (33) Right

Fourth Seat
- (41) Left
- (42) Middle
- (43) Right

- (97) Catastrophic
- (98) Other enclosed area (specify) _____
- (99) Unknown

INTRUDING COMPONENT

Interior Components
- (01) Steering assembly
- (02) Instrument panel left
- (03) Instrument panel center
- (04) Instrument panel right
- (05) Toe pan
- (06) A-pillar
- (07) B-pillar
- (08) C-pillar
- (09) D-pillar
- (10) Door panel (side)
- (12) Roof (or convertible top)
- (13) Roof side rail
- (14) Windshield
- (15) Windshield header
- (16) Window frame
- (17) Floor pan (includes sill)
- (18) Backlight header
- (19) Front seat back
- (20) Second seat back
- (21) Third seat back
- (22) Fourth seat back
- (23) Fifth seat back
- (24) Seat cushion
- (25) Back door/panel (e.g., tailgate)
- (26) Other interior component (specify): _____
- (27) Side panel - forward of the A-pillar
- (28) Side panel - rear of the A-pillar

Exterior Components
- (30) Hood
- (31) Outside surface of this vehicle (specify): _____
- (32) Other exterior object in the environment (specify): _____
- (33) Unknown exterior object
- (97) Catastrophic
- (98) Intrusion of unlisted component(s) (specify): _____
- (99) Unknown

MAGNITUDE OF INTRUSION

- (1) ≥ 1 inch but < 3 inches
- (2) ≥ 3 inches but < 6 inches
- (3) ≥ 6 inches but < 12 inches
- (4) ≥ 12 inches but < 18 inches
- (5) ≥ 18 inches but < 24 inches
- (6) ≥ 24 inches
- (7) Catastrophic
- (9) Unknown

DOMINANT CRUSH DIRECTION

- (1) Vertical
- (2) Longitudinal
- (3) Lateral
- (7) Catastrophic
- (9) Unknown

STEERING RIM/SPOKE DEFORMATION

COMPARISON VALUE	—	DAMAGE VALUE	=	DEFORMATION
	—		=	
	—		=	
	—		=	
	—		=	

STEERING COLUMN

87. Steering Column Type 2
(1) Fixed column
(2) Tilt column
(3) Telescoping column
(4) Tilt and telescoping column
(8) Other column type (specify): _____
(9) Unknown

88. Blank X X
(This variable is left blank so that numbering consistency can be maintained with the 1988-91 CDS.

89. Blank X X X
(This variable is left blank so that numbering consistency can be maintained with the 1988-91 CDS.

90. Blank X X X
(This variable is left blank so that numbering consistency can be maintained with the 1988-91 CDS.

91. Blank X X X
(This variable is left blank so that numbering consistency can be maintained with the 1988-91 CDS.

92. Steering Rim/Spoke Deformation 0
____Code actual measured deformation to the nearest inch.
(0) No steering rim deformation
(1-5) Actual measured value
(6) 6 inches or more
(8) Observed deformation cannot be measured
(9) Unknown

93. Location of Steering Rim/Spoke Deformation 0 0
(00) No steering rim deformation

Quarter Sections
(01) Section A
(02) Section B
(03) Section C
(04) Section D

Half Sections
(05) Upper half of rim/spoke
(06) Lower half of rim/spoke
(07) Left half of rim/spoke
(08) Right half of rim/spoke

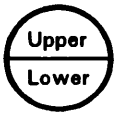

(09) Complete steering wheel collapse
(10) Undetermined location
(99) Unknown

INSTRUMENT PANEL

94. Odometer Reading 0 1 5,000
15387 miles—Code mileage to the nearest 1,000 miles
(000) No odometer
(001) Less than 1,500 miles
(300) 299,500 miles or more
(999) Unknown

Source: [redacted]

95. Instrument Panel Damage from Occupant Contact? 1
(0) No
(1) Yes
(9) Unknown

96. Knee Bolsters Deformed from Occupant Contact? 0
(0) No
(1) Yes
(8) Not present
(9) Unknown

97. Did Glove Compartment Door Open During Collision(s)? 1
(0) No
(1) Yes
(8) Not present
(9) Unknown

48-122A

VEHICLE INTERIOR SKETCHES

Note area of ejection/entrapment

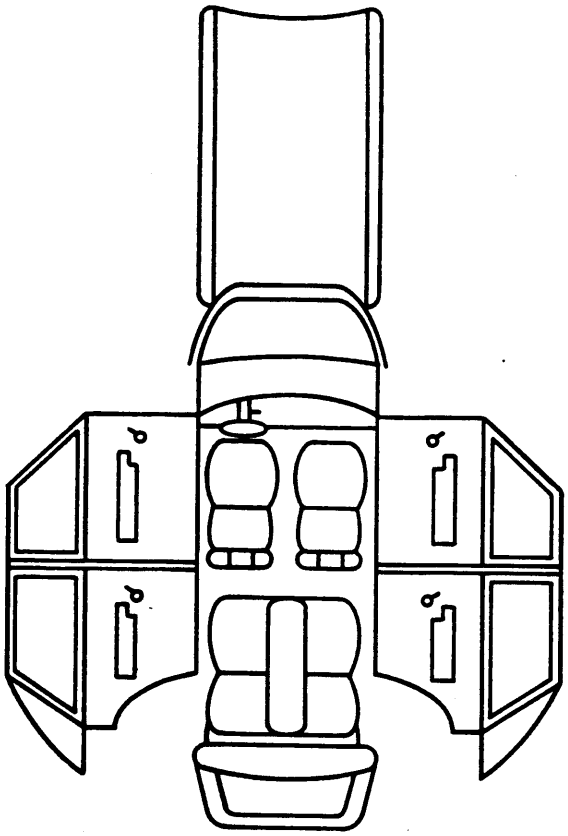

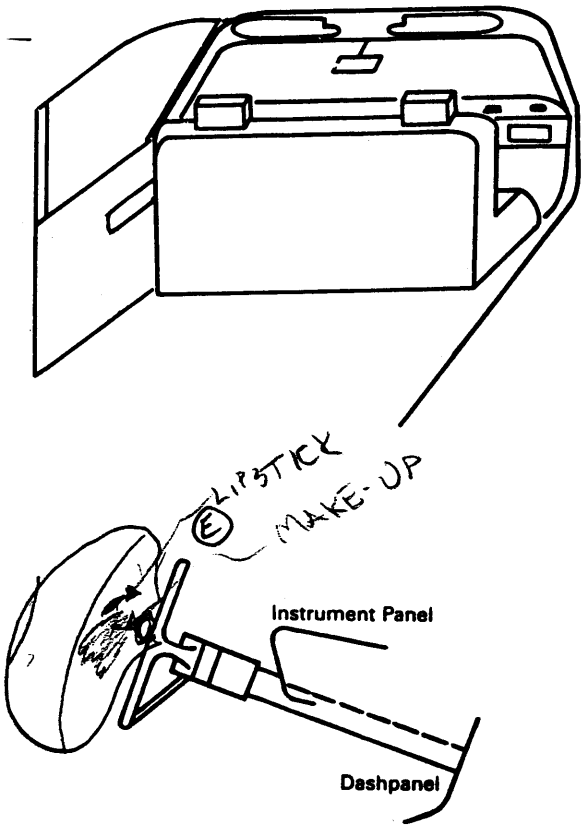

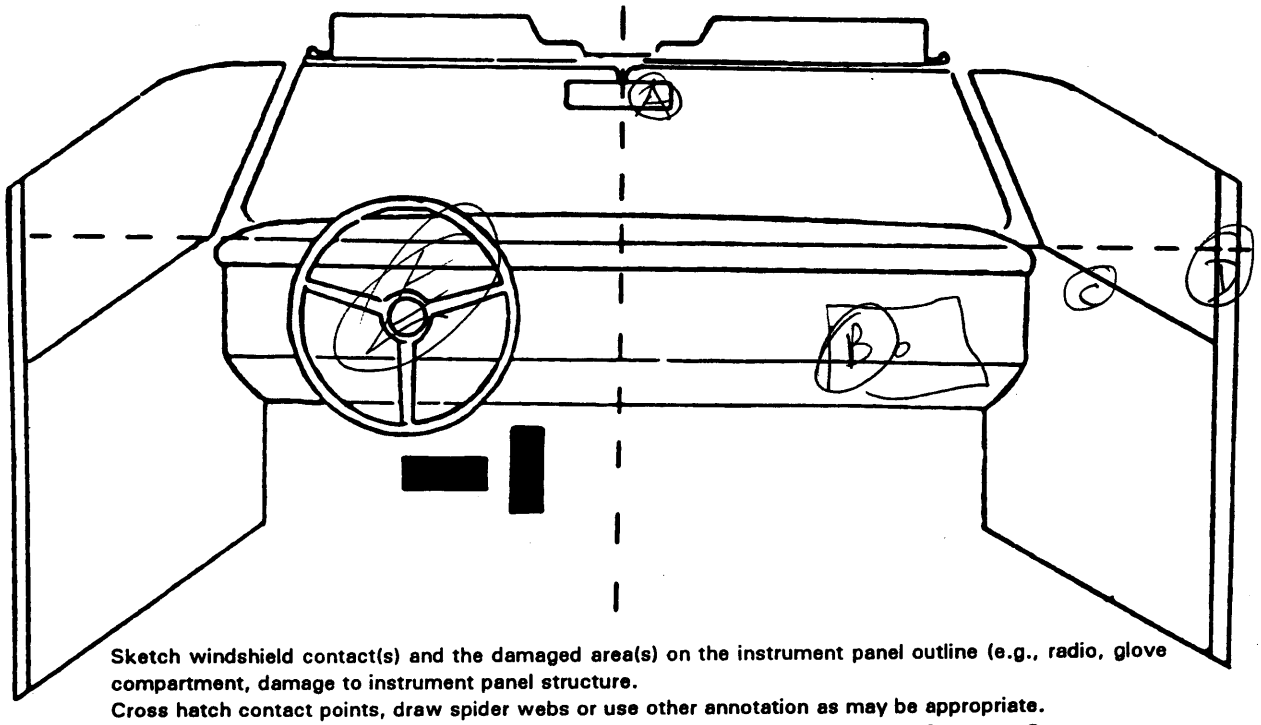

Sketch windshield contact(s) and the damaged area(s) on the instrument panel outline (e.g., radio, glove compartment, damage to instrument panel structure.
Cross hatch contact points, draw spider webs or use other annotation as may be appropriate.
Annotate the contacted area with a letter (begin with A) and list on the Points of Occupant Contact page.

48-122A

POINTS OF OCCUPANT CONTACT

Contact	Interior Component Contacted	Occupant No. If Known	Body Region If Known	Supporting Physical Evidence	Confidence Level of Contact Point
A	MIRROR	1	?	ASKEW	3
B	GLOVE BOX	1	?	OPEN / BROKEN	2
C	DOOR	1	?	SCUFF / HAIR	1
D	B-PILLAR	1	?	SCUFF	1
E	AIR BAG	1	?	SCUFF / LIPSTICK / MAKEUP	1
F					
G					
H					
I					
J					
K					
L					
M					
N					

CODES FOR INTERIOR COMPONENTS

FRONT
- (01) Windshield
- (02) Mirror
- (03) Sunvisor
- (04) Steering wheel rim
- (05) Steering wheel hub/spoke
- (06) Steering wheel (combination of codes 04 and 05)
- (07) Steering column, transmission selector lever, other attachment
- (08) Add on equipment (e.g., CB, tape deck, air conditioner)
- (09) Left instrument panel and below
- (10) Center instrument panel and below
- (11) Right instrument panel and below
- (12) Glove compartment door
- (13) Knee bolster
- (14) Windshield including one or more of the following: front header, A-pillar, instrument panel, mirror, or steering assembly (driver side only)
- (15) Windshield including one or more of the following: front header, A-pillar, instrument panel, or mirror (passenger side only)
- (16) Other front object (specify): _____

LEFT SIDE
- (20) Left side interior surface, excluding hardware or armrests
- (21) Left side hardware or armrest
- (22) Left A pillar
- (23) Left B pillar
- (24) Other left pillar (specify): _____
- (25) Left side window glass or frame
- (26) Left side window glass including one or more of the following: frame, window sill, A pillar, B pillar, or roof side rail.
- (27) Other left side object (specify): _____
- (28) Left side window sill

RIGHT SIDE
- (30) Right side interior surface, excluding hardware or armrests
- (31) Right side hardware or armrest
- (32) Right A pillar
- (33) Right B pillar
- (34) Other right pillar (specify): _____
- (35) Right side window glass or frame
- (36) Right side window glass including one or more of the following: frame, window sill, A pillar, B pillar, or roof side rail.
- (37) Other right side object (specify): _____
- (38) Right side window sill

INTERIOR
- (40) Seat, back support
- (41) Belt restraint webbing/buckle
- (42) Belt restraint B-pillar attachment point
- (43) Other restraint system component (specify): _____
- (44) Head restraint system
- (45) Air bag
- (46) Other occupants (specify): _____
- (47) Interior loose objects
- (48) Child safety seat (specify): _____
- (49) Other interior object (specify): _____

ROOF
- (50) Front header
- (51) Rear header
- (52) Roof left side rail
- (53) Roof right side rail
- (54) Roof or convertible top

FLOOR
- (56) Floor (including toe pan)
- (57) Floor or console mounted transmission lever, including console
- (58) Parking brake handle
- (59) Foot controls including parking brake

REAR
- (60) Backlight (rear window)
- (61) Backlight storage rack, door, etc.
- (62) Other rear object (specify): _____

CONFIDENCE LEVEL OF CONTACT POINT
- (1) Certain
- (2) Probable
- (3) Possible
- (9) Unknown

AUTOMATIC RESTRAINTS

NOTES: Encode the data for each applicable front seat position. The attribute for the variables may be found below. Restraint systems should be assessed during the vehicle inspection then coded on the Occupant Assessment Form.

AIR BAGS

		Left	Right
FIRST	Availability/Function		
	Deployment		
	Failure		

Air Bag System Availability/Function
(0) Not equipped/not available
(1) Air bag

Non-functional
(2) Air bag disconnected (specify): _____
(3) Air bag not reinstalled
(9) Unknown

Air Bag System Deployment
(0) Not equipped/not available
(1) Air bag deployed during accident (as a result of impact)
(2) Air bag deployed inadvertently just prior to accident
(3) Air bag deployed, accident sequence undetermined
(4) Nondeployed
(5) Unknown if deployed
(6) Air bag deployed as a result of a noncollision event during accident sequence (e.g., fire, explosion, electrical)
(9) Unknown

Did Air Bag System Fail?
(0) Not equipped/not available
(1) No
(2) Yes (specify): _____
(9) Unknown

AUTOMATIC BELTS

		Left	Right
FIRST	Availability/Function		
	Use		
	Type		
	Proper Use		
	Failure Modes		

Automatic (Passive) Belt System Availability/Function
(0) Not equipped/not available
(1) 2 point automatic belts
(2) 3 point automatic belts
(3) Automatic belts - type unknown

Non-functional
(4) Automatic belts destroyed or rendered inoperative
(9) Unknown

Automatic (Passive) Belt System Use
(0) Not equipped/not available/destroyed or rendered inoperative
(1) Automatic belt in use
(2) Automatic belt not in use (manually disconnected, motorized track inoperative)
(3) Automatic belt use unknown
(9) Unknown

Automatic (Passive) Belt System Type
(0) Not equipped/not available
(1) Non-motorized system
(2) Motorized system
(9) Unknown

Proper Use of Automatic (Passive) Belt System
(0) Not equipped/not available/not used
(1) Automatic belt used properly
(2) Automatic belt used properly with child safety seat

Automatic Belt Used Improperly
(3) Automatic shoulder belt worn under arm
(4) Automatic shoulder belt worn behind back
(5) Automatic belt worn around more than one person
(6) Lap portion of automatic belt worn on abdomen
(7) Automatic lap and shoulder belt or automatic shoulder belt used improperly with child safety seat (specify): _____
(8) Other improper use of automatic belt system (specify): _____
(9) Unknown

Automatic (Passive) Belt Failure Modes During Accident
(0) Not equipped/not available/not in use
(1) No automatic belt failure(s)
(2) Torn webbing (stretched webbing not included)
(3) Broken buckle or latchplate
(4) Upper anchorage separated
(5) Other anchorage separated (specify): _____
(6) Broken retractor
(7) Combination of above (specify):
(8) Other automatic belt failure (specify): _____
(9) Unknown

MANUAL RESTRAINTS

NOTES: Encode the applicable data for each seat position in the vehicle. The attribute for the variable may be found below. Restraint systems should be assessed during the vehicle inspection then coded on the Ocupant Assessment Form.

If a Child safety seat is present, encode the data on the back of this page.

If the vehicle has automatic restraints available, encode the appropriate data on the back of the previous page.

		Left	Center	Right
FIRST	Availability	4	0	4
	Use	00	00	00
	Failure Modes	0	0	0
SECOND	Availability	4	3	4
	Use	00	00	00
	Failure Modes	0	0	0
THIRD	Availability			
	Use			
	Failure Modes			
OTHER	Availability			
	Use			
	Failure Modes			

Manual (Active) Belt System Availability

(0) None available
(1) Belt removed/destroyed
(2) Shoulder belt
(3) Lap belt
(4) Lap and shoulder belt
(5) Belt available - type unknown

Integral Belt Partially Destroyed

(6) Shoulder belt (lap belt destroyed/removed)
(7) Lap belt (shoulder belt destroyed/removed)

(8) Other belt (specify): _____

(9) Unknown

Manual (Active) Belt System Use

(00) None used, not available, or belt removed/destroyed
(01) Inoperable (specify): _____
(02) Shoulder belt
(03) Lap belt
(04) Lap and shoulder belt
(05) Belt used - type unknown
(08) Other belt used (specify): _____
(12) Shoulder belt used with child safety seat
(13) Lap belt used with child safety seat
(14) Lap and shoulder belt used with child safety seat
(15) Belt used with child safety seat - type unknown
(18) Other belt used with child safety seat (specify): _____
(99) Unknown if belt used

Manual (Active) Belt Failure Modes During Accident

(0) No manual belt used or not available
(1) No manual belt failure(s)
(2) Torn webbing (stretched webbing not included)
(3) Broken buckle or latchplate
(4) Upper anchorage separated
(5) Other anchorage separated (specify): _____
(6) Broken retractor
(7) Combination of above (specify): _____
(8) Other manual belt failure (specify): _____
(9) Unknown

CHILD SAFETY SEAT FIELD ASSESSMENT

When a child safety seat is present enter the occupant's number in the first row and complete the column below the occupant's number using the codes listed below. Complete a column for each child safety seat present.

Occupant Number						
1. Type of Child Safety Seat						
2. Child Safety Seat Orientation						
3. Child Safety Seat Harness Usage						
4. Child Safety Seat Shield Uasge						
5. Child Safety Seat Tether Usage						
6. Child Safety Seat Make/Model	Specify Below for Each Child Safety Seat					

1. Type of Child Safety Seat

   (0) No child safety seat
   (1) Infant seat
   (2) Toddler seat
   (3) Convertible seat
   (4) Booster seat
   (7) Other type child safety seat (specify): _____
   (8) Unknown child safety seat type
   (9) Unknown if child safety seat used

2. Child Safety Seat Orientation

   (00) No child safety seat

   Designed for Rear Facing for This Age/Weight
   (01) Rear facing
   (02) Forward facing
   (08) Other orientation (specify): _____
   (09) Unknown orientation

   Designed for Forward Facing for This Age/Weight
   (11) Rear facing
   (12) Forward facing
   (18) Other orientation (specify): _____
   (19) Unknown orientation

   Unknown Design or Orientation For This Age/Weight, or Unknown Age/Weight
   (21) Rear facing
   (22) Forward facing
   (28) Other orientation (specify): _____
   (29) Unknown orientation

   (99) Unknown if child safety seat used

3. Child Safety Seat Harness Usage

4. Child Safety Seat Shield Usage

5. Child Safety Seat Tether Usage
   Note: Options Below Are Used for Variables 3-5.

   (00) No child safety seat

   Not Designed with Harness/Shield/Tether
   (01) After market harness/shield/tether added, not used
   (02) After market harness/shield/tether used
   (03) Child safety seat used, but no after market harness/shield/tether added
   (09) Unknown if harness/shield/tether added or used

   Designed With Harness/Shield/Tether
   (11) Harness/shield/tether not used
   (12) Harness/shield/tether used
   (19) Unknown if harness/shield/tether used

   Unknown If Designed With Harness/Shield/Tether
   (21) Harness/shield/tether not used
   (22) Harness/shield/tether used
   (29) Unknown if harness/shield/tether used

   (99) Unknown if child safety seat used

6. Child Safety Seat Make/Model
   (Specify make/model and occupant number)

   _____
   _____
   _____
   _____

HEAD RESTRAINTS/SEAT EVALUATION

NOTES: Encode the applicable data for each seat position in the vehicle. The attribute for these variables may be found at the bottom of the page. Head restraint type/damage and seat type/performance should be assessed during the vehicle inspection then coded on the Occupant Assessment Form.

		Left	Center	Right
FIRST	Head Restraint Type/Damage	3	0	3
	Seat Type	01	00	01
	Seat Performance	1	0	1
	Seat Orientation	1	0	1
SECOND	Head Restraint Type/Damage	0	0	0
	Seat Type	03	03	03
	Seat Performance	1	1	1
	Seat Orientation	1	1	1
THIRD	Head Restraint Type/Damage			
	Seat Type			
	Seat Performance			
	Seat Orientation			
OTHER	Head Restraint Type/Damage			
	Seat Type			
	Seat Performance			
	Seat Orientation			

Head Restraint Type/Damage by Occupant at This Occupant Position

(0) No head restraints
(1) Integral — no damage
(2) Integral — damaged during accident
(3) Adjustable — no damage
(4) Adjustable — damaged during accident
(5) Add-on — no damage
(6) Add-on — damaged during accident
(8) Other Specify): _____
(9) Unknown

Seat Type (this Occupant Position)

(00) No seat
(01) Bucket
(02) Bucket with folding back
(03) Bench
(04) Bench with separate back cushions
(05) Bench with folding back(s)
(06) Split bench with separate back cushions
(07) Split bench with folding back(s)
(08) Pedestal (i.e., column supported)
(09) Other seat type (specify): _____
(10) Box mounted seat (i.e., van type)
(99) Unknown

Seat Performance (this Occupant Position)

(0) No seat
(1) No seat performance failure(s)
(2) Seat adjusters failed
(3) Seat back folding locks or "seat back" failed specify: _____
(4) Seat tracks/anchors failed
(5) Deformed by impact of occupant
(6) Deformed by passenger compartment intrusion (specify): _____
(7) Combination of above (specify): _____
(8) Other (specify): _____
(9) Unknown

Seat Orientation (this Occupant Position)

(0) No seat
(1) Forward facing seat
(2) Rear facing seat
(3) Side facing seat (inward)
(4) Side facing seat (outward)
(8) Other (specify): _____
(9) Unknown

DESCRIBE ANY INDICATION OF ABNORMAL OCCUPANT POSTURE (I.E., UNUSUAL OCCUPANT CONTACT PATTERN)

POSSIBLY LEANING TO RIGHT (MAYBE LIGHTING A CIGARETTE) — CIGARETTE LIGTER ON BACK DASH — MAKE-UP AND LIPSTICK ON REAR OF AIRBAG (SEE PHOTOS)

EJECTION/ENTRAPMENT DATA

Complete the following if the researcher has any indication that an occupant was either ejected from or entrapped in the vehicle. Code the appropriate data on the Occpant Assessment Form.

EJECTION No [ ] Yes [X]

Describe indications of ejection and body parts involved in partial ejection(s):

HAIR / SKIN / BLOOD ON OUTSIDE OF UPPER B-PILLAR

Occupant Number	1					
Ejection	1					
(Note on Vehicle Interior Sketch) Ejection Area	3					
Ejection Medium	4					
Medium Status	2					

Ejection
- (1) Complete ejection
- (1) Partial ejection
- (3) Ejection, Unknown degree
- (9) Unknown

Ejection Area
- (1) Windshield
- (2) Left front
- (3) Right front
- (4) Left rear
- (5) Right rear
- (6) Rear
- (7) Roof
- (8) Other area (e.g., back of pickup, etc.) (specify): _____
- (9) Unknown

Ejection Medium
- (1) Door/hatch/tailgate
- (2) Nonfixed roof structure
- (3) Fixed glazing
- (4) Nonfixed glazing (specify): SIDE WINDOW
- (5) Integral structure
- (8) Other medium (specify): _____
- (9) Unknown

Medium Status (Immediately Prior to Impact)
- (1) Open
- (2) Closed
- (3) Integral structure
- (9) Unknown

ENTRAPMENT No [X] Yes [ ]

Describe entrapment mechanism: _____

Component(s): _____

(Note in vehicle interior diagram)

26. Seat Type (this Occupant Position) 0 1
(00) Occupant not seated or no seat
(01) Bucket
(02) Bucket with folding back
(03) Bench
(04) Bench with separate back cushions
(05) Bench with folding back(s)
(06) Split bench with separate back cushions
(07) Split bench with folding back(s)
(08) Pedestal (i.e., column supported)
(09) Other seat type (specify): _____
(10) Box mounted seat (i.e., van type)
(99) Unknown

27. Seat Performance (this Occupant Position) 1
(0) Occupant not seated or no seat
(1) No seat performance failure(s)
(2) Seat adjusters failed
(3) Seat back folding locks or "seat back" failed
(4) Seat track/anchors failed
(5) Deformed by impact of occupant
(6) Deformed by passenger compartment intrusion (specify): _____
(7) Combination of above (specify): _____
(8) Other (specify): _____
(9) Unknown

CHILD SAFETY SEAT

28. Child Safety Seat Make/Model 0 0 0
(000) No child safety seat
Applicable codes are found in your NASS CDS Data Collection, Coding and Editing
(950) Built-in child safety seat
(997) Other make/model (specify): _____
(998) Unknown make/model
(999) Unknown if child safety seat used

29. Type of Child Safety Seat 0
(0) No child safety seat
(1) Infant seat
(2) Toddler seat
(3) Convertible seat
(4) Booster seat
(7) Other type child safety seat (specify): _____
(8) Unknown child safety seat type
(9) Unknown if child safety seat used

30. Child Safety Seat Orientation 0 0
(00) No child safety seat

Designed for Rear Facing for This Age/Weight
(01) Rear facing
(02) Forward facing
(08) Other orientation (specify): _____
(09) Unknown orientation

Designed For Forward Facing for This Age/Weight
(11) Rear facing
(12) Forward facing
(18) Other orientation (specify): _____
(19) Unknown orientation

Unknown Design or Orientation For This Age/Weight, or Unknown Age/Weight
(21) Rear facing
(22) Forward facing
(28) Other orientation (specify): _____
(29) Unknown orientation

(99) Unknown if child safety seat used

31. Child Safety Seat Harness Usage 0 0

32. Child Safety Seat Shield Usage 0 0

33. Child Safety Seat Tether Usage 0 0
Note: Options below applicable to Variables OA31-OA33.
(00) No child safety seat

Not Designed With Harness/Shield/Tether
(01) After market harness/shield/tether added, not used
(02) After market harness/shield/tether used
(03) Child safety seat used, but no after market harness/shield/tether added
(09) Unknown if harness/shield/tether added or used

Designed With Harness/Shield/Tether
(11) Harness/shield/tether not used
(12) Harness/shield/tether used
(19) Unknown if harness/shield/tether used

Unknown If Designed With Harness/Shield/Tether
(21) Harness/shield/tether not used
(22) Harness/shield/tether used
(29) Unknown if harness/shield/tether used

(99) Unknown if child safety seat used

U.S. Department of Transportation
National Highway Traffic Safety Administration

Form Approved
O.M.B. No. 2127-0021

OCCUPANT INJURY FORM

NATIONAL ACCIDENT SAMPLING SYSTEM
CRASHWORTHINESS DATA SYSTEM

1. Primary Sampling Unit Number	48	3. Vehicle Number	01
2. Case Number - Stratum	122A	4. Occupant Number	01

INJURY DATA

Record below the actual injuries sustained by this occupant that were identified from the official and unofficial data sources. Remember not to double count an injury just because it was identified from two different sources. If greater than ten injuries have been documented, encode the balance on the Occupant Injury Supplement.

	Source of Injury Data	O.I.C.-A.I.S Body Region	Aspect	Lesion	System Organ	A.I.S. Severity	Injury Source	Injury Source Confidence Level	Direct/ Indirect Injury	Occupant Area Intrusion No.
1st	5. 7	6. H	7. W	8. N	9. W	10. 6	11. 67	12. 1	13. 1	14. 00
2nd	15.	16.	17.	18.	19.	20.	21.	22.	23.	24.
3rd	25.	26.	27.	28.	29.	30.	31.	32.	33.	34.
4th	35.	36.	37.	38.	39.	40.	41.	42.	43.	44.
5th	45.	46.	47.	48.	49.	50.	51.	52.	53.	54.
6th	55.	56.	57.	58.	59.	60.	61.	62.	63.	64.
7th	65.	66.	67.	68.	69.	70.	71.	72.	73.	74.
8th	75.	76.	77.	78.	79.	80.	81.	82.	83.	84.
9th	85.	86.	87.	88.	89.	90.	91.	92.	93.	94.
10th	95.	96.	97.	98.	99.	100.	101.	102.	103.	104.

HS Form 433B (1/92)

This report is authorized by P.L. 89-563, Title 1, Section 106, 108, and 112. While you are not required to respond, your cooperation is needed to make the results of this data collection effort comprehensive, accurate, and timely.

OCCUPANT INJURY DATA

	Source of Injury Data	O.I.C.-A.I.S Body Region	Aspect	Lesion	System Organ	A.I.S. Severity	Injury Source	Injury Source Confidence Level	Direct/ Indirect Injury	Occupant Area Intrusion No.
11th	—	—	—	—	—	—	— —	—	—	— —
12th	—	—	—	—	—	—	— —	—	—	— —
13th	—	—	—	—	—	—	— —	—	—	— —
14th	—	—	—	—	—	—	— —	—	—	— —
15th	—	—	—	—	—	—	— —	—	—	— —
16th	—	—	—	—	—	—	— —	—	—	— —
17th	—	—	—	—	—	—	— —	—	—	— —
18th	—	—	—	—	—	—	— —	—	—	— —
19th	—	—	—	—	—	—	— —	—	—	— —
20th	—	—	—	—	—	—	— —	—	—	— —
21st	—	—	—	—	—	—	— —	—	—	— —
22nd	—	—	—	—	—	—	— —	—	—	— —
23rd	—	—	—	—	—	—	— —	—	—	— —
24th	—	—	—	—	—	—	— —	—	—	— —
25th	—	—	—	—	—	—	— —	—	—	— —

48-122A

VI 01

OFFICIAL INJURY DATA — SOFT TISSUE INJURIES

Indicate the Location, Lesion, Detail (size, depth, fracture type, head injury clinical signs and neurological deficits), and Source of all injuries indicated by official sources (or from PAR or other unofficial sources if medical records and interviewee data are unavailable.)

UPDATE

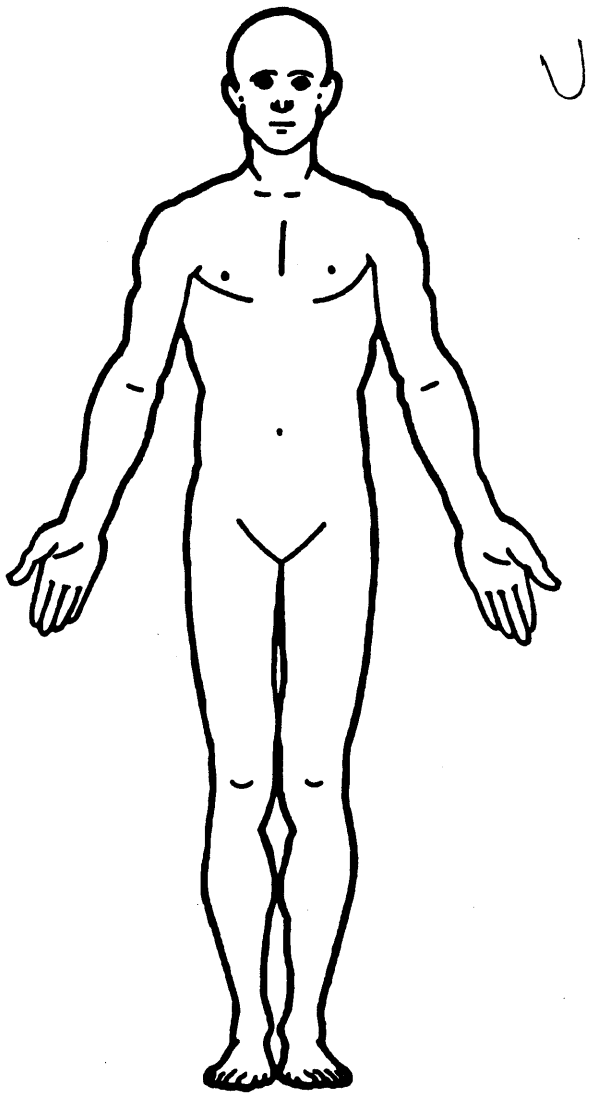

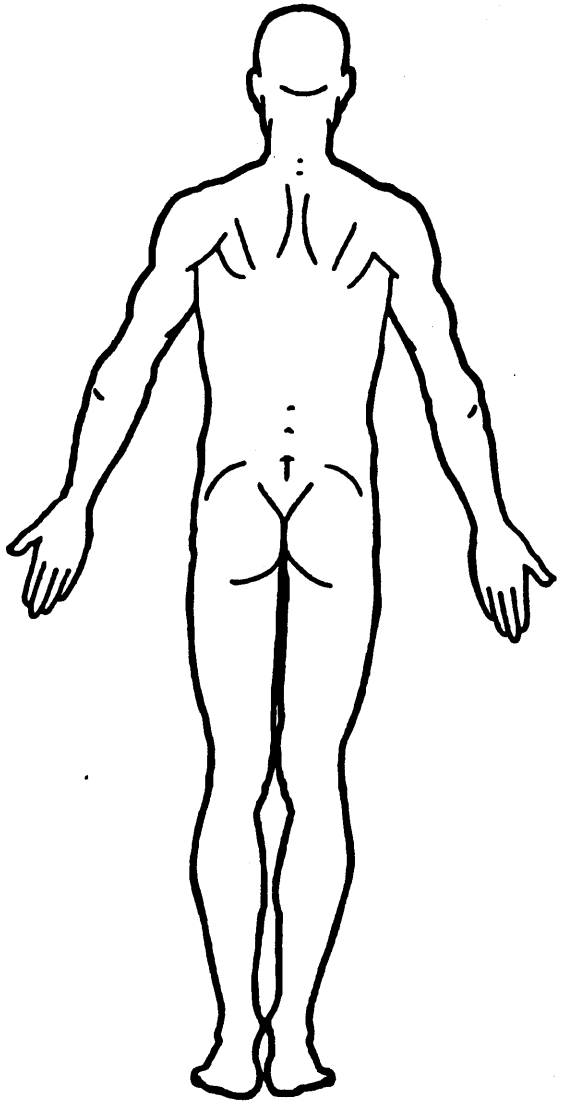

SOURCE OF INJURY DATA

OFFICIAL

(1) Autopsy records with or without hospital medical records
(2) Hospital medical records other than emergency room (e.g., dishcarge summary)
(3) Emergency room records only (including associated X-rays or other lab reports)
(4) Private physician, walk-in or emergency clinic

UNOFFICIAL

(5) Lay coroner report
(6) E.M.S. personnel
(7) Interviewee
(8) Other source (specify): _____
(9) Police

INJURY SOURCE

FRONT

(01) Windshield
(02) Mirror
(03) Sunvisor
(04) Steering wheel rim
(05) Steering wheel hub/spoke
(06) Steering wheel (combination of codes 04 and 05)
(07) Steering column, transmission selector lever, other attachment
(08) Add on equipment (e.g., CB, tape deck, air conditioner)
(09) Left instrument panel and below
(10) Center instrument panel and below
(11) Right instrument panel and below
(12) Glove compartment door
(13) Knee bolster
(14) Windshield including one or more of the following: front header, A-pillar, instrument panel, mirror, or steering assembly (driver side only)
(15) Windshield including one or more of the following: front header, A-pillar, instrument panel, or mirror (passenger side only)
(16) Other front object (specify): _____

LEFT SIDE

(20) Left side interior surface, excluding hardware or armrests
(21) Left side hardware or armrest
(22) Left A pillar
(23) Left B pillar
(24) Other left pillar (specify): _____
(25) Left side window glass or frame
(26) Left side window glass including one or more of the following: frame, window sill, A-pillar, B-pillar, or roof side rail.
(27) Other left side object (specify): _____
(28) Left side window sill

RIGHT SIDE

(30) Right side interior surface, excluding hardware or armrests
(31) Right side hardware or armrest
(32) Right A pillar
(33) Right B pillar
(34) Other right pillar (specify): _____
(35) Right side window glass or frame
(36) Right side window glass including one or more of the following: frame, window sill, A pillar, B pillar, or roof side rail.
(37) Other right side object (specify): _____
(38) Right side window sill

INTERIOR

(40) Seat, back support
(41) Belt restraint webbing/buckle
(42) Belt restraint B-pillar attachment point
(43) Other restraint system component (specify): _____
(44) Head restraint system
(45) Air bag
(46) Other occupants (specify): _____
(47) Interior loose objects
(48) Child safety seat (specify): _____
(49) Other interior object (specify): _____

ROOF

(50) Front header
(51) Rear header
(52) Roof left side rail
(53) Roof right side rail
(54) Roof or convertible top

FLOOR

(56) Floor (including toe pan)
(57) Floor or console mounted transmission lever, including console
(58) Parking brake handle
(59) Foot controls including parking brake

REAR

(60) Backlight (rear window)
(61) Backlight storage rack, door, etc.
(62) Other rear object (specify): _____

EXTERIOR of OCCUPANT'S VEHICLE

(65) Hood
(66) Outside hardware (e.g., outside mirror, antenna)
(67) Other exterior surface or tires (specify): B-Pillar
(68) Unknown exterior objects

EXTERIOR OF OTHER MOTOR VEHICLE

(70) Front bumper
(71) Hood edge
(72) Other front of vehicle (specify): _____
(73) Hood
(74) Hood ornament
(75) Windshield, roof rail, A-pillar
(76) Side surface
(77) Side mirrors
(78) Other side protrusions (specify) _____
(79) Rear surface
(80) Undercarriage
(81) Tires and wheels
(82) Other exterior of other motor vehicle (specify): _____
(83) Unknown exterior of other motor vehicle

OTHER VEHICLE OR OBJECT IN THE ENVIRONMENT

(84) Ground
(85) Other vehicle or object (specify) _____
(86) Unknown vehicle or object

NONCONTACT INJURY

(90) Fire in vehicle
(91) Flying glass
(92) Other noncontact injury source (specify): _____
(93) Air bag exhaust gases
(97) Injured, unknown source

INJURY SOURCE CONFIDENCE LEVEL

(1) Certain
(2) Probable
(3) Possible
(9) Unknown

DIRECT/INDIRECT INJURY

(1) Direct contact injury
(2) Indirect contact injury
(3) Noncontact injury
(7) Injured, unknown source

OCCUPANT INJURY CLASSIFICATION

O.I.C. Body Region

(M) Abdomen
(Q) Ankle—foot
(A) Arm (upper)
(B) Back-thoracolumbar spine
(C) Chest
(E) Elbow
(F) Face
(R) Forearm
(H) Head—skull
(U) Injured, unknown region
(K) Knee
(L) Leg (lower)
(Y) Lower limbs(s) (whole or unknown part)
(N) Neck—cervical spine
(P) Pelvic—hip
(S) Shoulder
(T) Thigh
(X) Upper limb(s) (whole or unknown part)
(O) Whole body
(W) Wrist—hand

Aspect of Injury

(A) Anterior—front
(B) Bilateral (rib fracture only)
(C) Central
(I) Inferior—lower
(U) Injured, unknown aspect
(L) Left
(P) Posterior—back
(R) Right
(S) Superior—upper
(W) Whole region

Lesion

(A) Abrasion
(M) Amputation
(V) Avulsion
(B) Burn
(K) Concussion
(C) Contusion
(N) Crush
(G) Detachment, separation
(D) Dislocation
(F) Fracture
(Z) Fracture and dislocation
(U) Injured, unknown lesion
(L) Laceration
(O) Other
(P) Perforation, puncture
(R) Rupture
(S) Sprain
(T) Strain
(E) Total severance, transection

System/Organ

(W) All systems in region
(A) Arteries—veins
(B) Brain
(D) Digestive
(E) Ears
(O) Eye
(H) Heart
(U) Injured, unknown system
(I) Integumentary
(J) Joints
(K) Kidneys
(L) Liver
(M) Muscles
(N) Nervous system
(P) Pulmonary—lungs
(R) Respiratory
(S) Skeletal
(C) Spinal cord
(Q) Spleen
(T) Thyroid, other endocrine gland
(V) Vertebrae

Abbreviated Injury Scale

(1) Minor injury
(2) Moderate injury
(3) Seriour injury
(4) Severe injury
(5) Critical injury
(6) Maximum (untreatable)
(7) Injured, unknown severity

48-188A
11/01

OFFICIAL INJURY DATA — SKELETAL INJURIES

Restrained?

___ No

___ Yes

Blood Alcohol Level (mg/dl)

BAL = ____

Glasgow Coma Scale Score

GCSS = ____

Units of Blood Given

Units = ____

Aterial Blood Gases

pH = __.__

PO_2 = ____

PCO_2 ____

HCO_3 ____

Indicate the Location, Lesion, Detail (size, depth, fracture type, head injury clinical signs and neurological deficits), and Source of all injuries indicated by official sources (or from PAR or other unofficial sources if medical records and interviewee data are unavailable.)

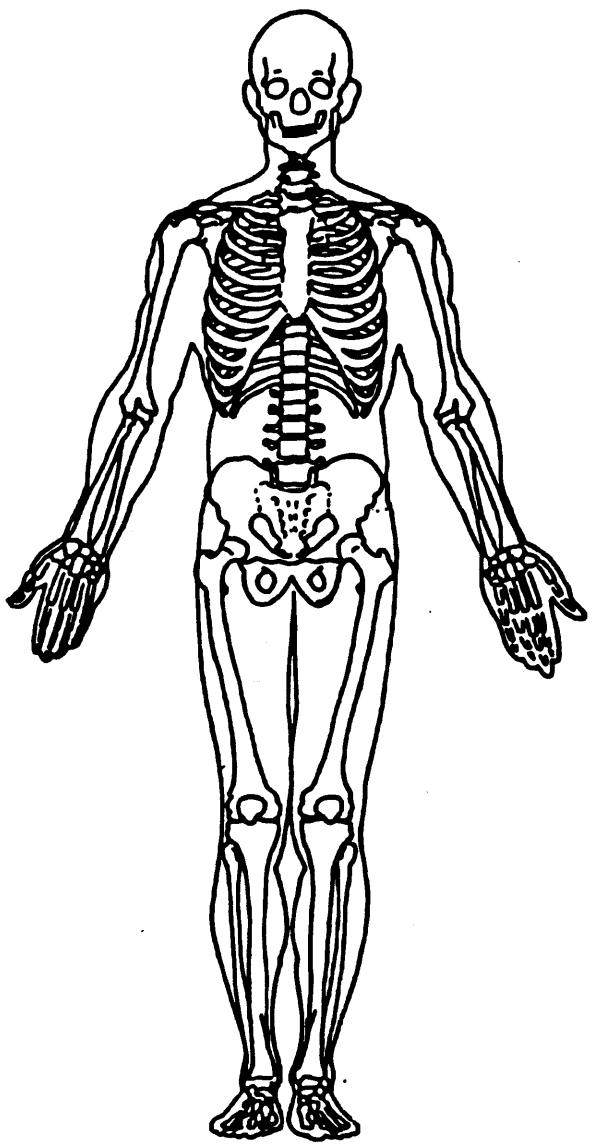

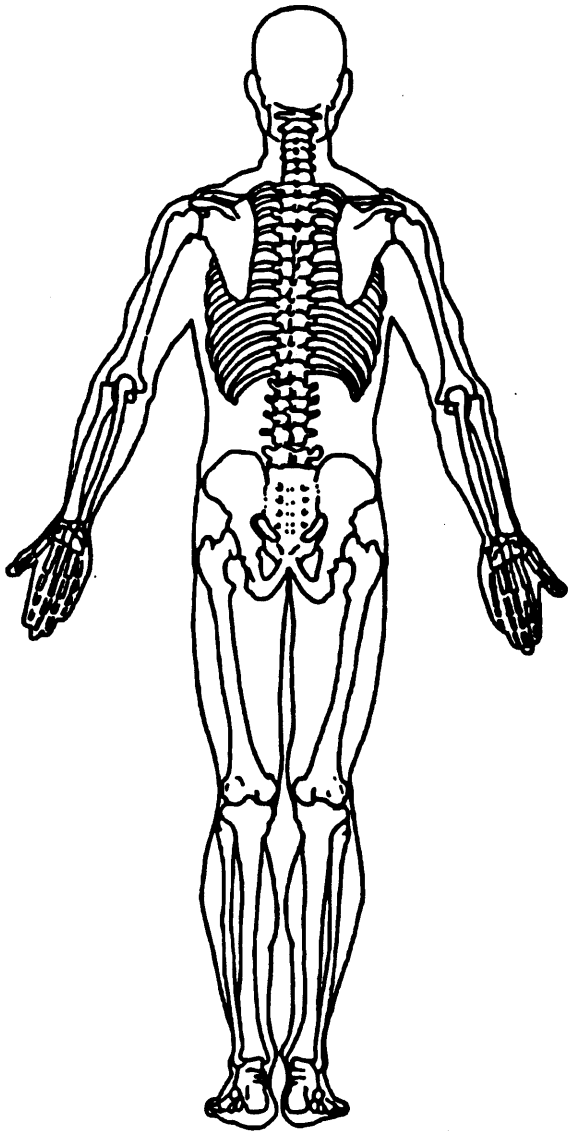

OFFICIAL INJURY DATA —INTERNAL INJURIES

Indicate the Location, Lesion, Detail (size, depth, fracture type, head injury clinical signs and neurological deficits), and Source of all injuries indicated by official sources (or from PAR or other unofficial sources if medical records and interviewee data are unavailable.)

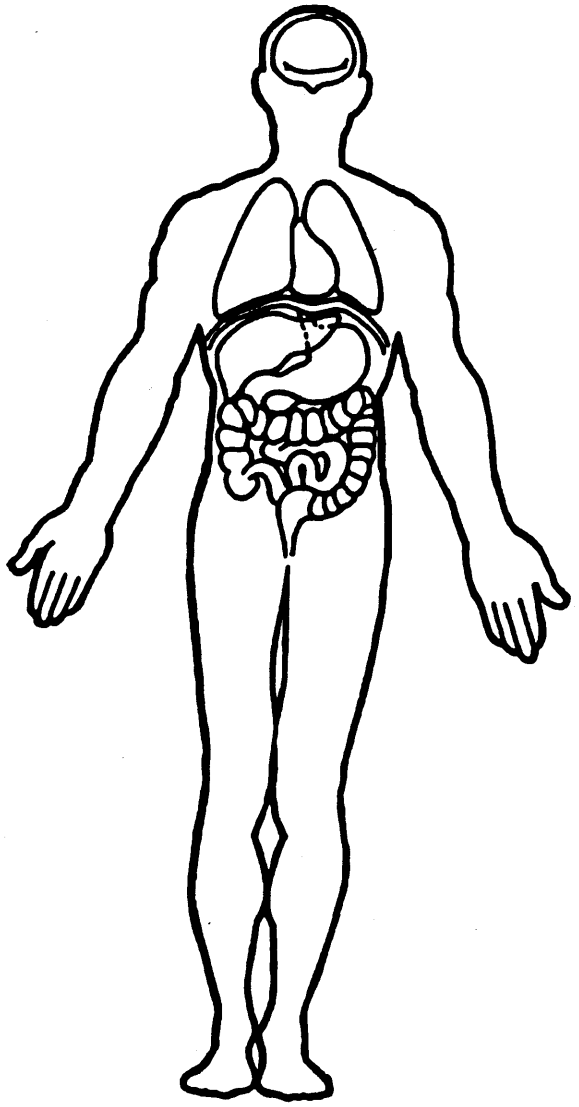

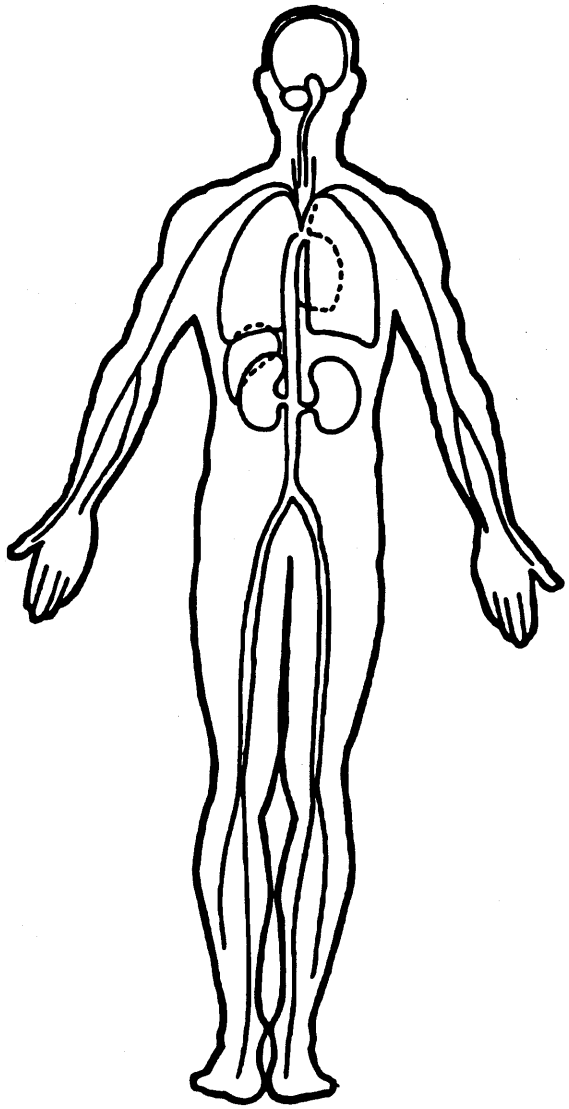

BEST AVAILABLE COPY

[redacted] 1992

[redacted]ent of Transportation
[redacted]al Highway Traffic Safety
[redacted]nistration

UPDATE FORM

NATIONAL ACCIDENT SAMPLING SYSTEM
CRASHWORTHINESS DATA SYSTEM

1. Primary Sampling Unit Number 48
2. Case Number — Stratum 122A
3. Vehicle Number 01
4. Occupant Number 01

Driver or Occupant Name: [redacted]

Address: _____

Other Information: _____

(Sanitize this section prior to Update submission.)

UPDATED CASE INFORMATION

	INITIAL SUBMISSION	UPDATED INFORMATION
GV12. Alcohol Test Result Result for Driver	96	00
GV39. Other Drug Specimen Test Type for Driver	0	1
GV40.-GV41. Narcotic Drug	00	7
GV42.-GV43. Depressant Drug	00	7
GV44.-GV45. Stimulant Drug	00	7
GV46.-GV47. Hallucinogen Drug	00	7
GV48.-GV49. Cannabinoid Drug	00	7
GV50.-GV51. Phencyclidine (PCP)	00	7
GV52.-GV53. Inhalant Drug	00	7
GV54.-GV55. Other Drug (Excluding Nicotine, Aspirin, Alcohol, Drugs Administered Post-Crash)	00	7
GV56. Driver's Zip Code	[redacted]	
GV57. Driver's Race/Ethnic Origin	1	
OA05. Occupant's Age	32	
OA06. Occupant's Sex	2	
OA07. Occupant's Height	99	61
OA08. Occupant's Weight	999	131
OA17. Manual (Active) Belt System Availability	4	
OA18. Manual (Active) Belt System Use	00	

	INITIAL SUBMISSION	UPDATED INFORMATION
OA21. Air Bag System Availability/Function	1	
OA22. Air Bag System Deployment	1	
OA35. Treatment - Mortality	1	
OA36. Type of Medical Facility (for Initial Treatment)	0	
OA37. Hospital Stay	00	
OA38. Working Days Lost	62	
OA39. Time to Death	01	
OA40. 1st Medically Reported Cause of Death	99	
OA41. 2nd Medically Reported Cause of Death	00	
OA42. 3rd Medically Reported Cause of Death	00	
OA43. Number of Recorded Injuries for This Occupant	01	24
OA44. Automatic (Passive) Belt System Availability/Function	0	
OA45. Automatic (Passive) Belt System Use	0	
OA50. Glasgow Coma Scale (GCS) Score	01	
OA51 Was the Occupant Given Blood?	1	
OA52. Arterial Blood Gases (ABG) - HCO_3	01	
___. _____		
___. _____		

HS Form 433C (Rev. 1/92)

BEST AVAILABLE COPY

STATUS OF LOG INJURY INFORMATION

	INITIAL SUBMISSION	UPDATED INFORMATION
OAL12. Injury Treatment Status	___	___
OAL13. Injury Information		
Official		
a. Autopsy (invasive examination)	B	
b. Post-ER medical record which includes information about death based on non-invasive examination	B	
c. Admission record/summary or admission/discharge face sheet	B	
d. Discharge summary	B	
e. Operative report	B	
f. Radiographic record(s) post ER visit	B	
g. History and physical examination and/or consultation records	B	
h. Emergency room records	B	
i. Radiographic record(s) associated with ER visit	B	
j. Private physician	B	
Unofficial		
k. Lay coroner	B	
l. EMS record	B	
m. Interviewee	B	
n. Other source (specify): _____	B	B
o. Police report	B	B
OAL14. Medical Facility Code	___	___
OIL07. Date Official Medical Data Obtained	___/___/___	

INJURY DATA CODED ON INITIAL SUBMISSION

	Source of Injury Data	O.I.C.-A.I.S Body Region	Aspect	Lesion	System Organ	A.I.S. Severity	Injury Source	Injury Source Confidence Level	Direct/ Indirect Injury	Occupant Area Intrusion No.
1st	5. 7	6. H	7. W	8. N	9. W	10. 6	11. 76	12. 1	13. 1	14. 00
2nd	15.	16.	17.	18.	19.	20.	21.	22.	23.	24.
3rd	25.	26.	27.	28.	29.	30.	31.	32.	33.	34.
4th	35.	36.	37.	38.	39.	40.	41.	42.	43.	44.
5th	45.	46.	47.	48.	49.	50.	51.	52.	53.	54.
6th	55.	56.	57.	58.	59.	60.	61.	62.	63.	64.
7th	65.	66.	67.	68.	69.	70.	71.	72.	73.	74.
8th	75.	76.	77.	78.	79.	80.	81.	82.	83.	84.
9th	85.	86.	87.	88.	89.	90.	91.	92.	93.	94.
10th	95.	96.	97.	98.	99.	100.	101.	102.	103.	104.
11th	105.	106.	107.	108.	109.	110.	111.	112.	113.	114.
12th	115.	116.	117.	118.	119.	120.	121.	122.	123.	124.
13th	125.	126.	127.	128.	129.	130.	131.	132.	133.	134.
14th	135.	136.	137.	138.	139.	140.	141.	142.	143.	144.
15th	145.	146.	147.	148.	149.	150.	151.	152.	153.	154.

Note: Keep a photocopy of the following original submitted pages when applicable: Exterior Vehicle Form pages 2, 3, 4; Interior Vehicle Form pages 1-reverse, 2, 4, 5; Occupant Injury Form pages 2, 3, 3-reverse; Interview Form pages 3, 4, 5.

BEST AVAILABLE COPY 48-122A

INJURY DATA

Record below the actual injuries sustained by this occupant that were identified from the official and unofficial data sources. Remember not to double count an injury just because it was identified from two different sources. If greater than ten injuries have been documented, encode the balance on the Occupant Injury Supplement

	Source of Injury Data	O.I.C.-A.I.S Body Region	Aspect	Lesion	System Organ	A.I.S Severity	Injury Source	Injury Source Confidence Level	Direct Indirect Injury	Occupant Area Intrusion No.
1st	5. Z	6. H	7. S	8. F	9. S	10. ~~3~~ 2	11. 67	12. 1	13. 1	14. 00
2nd	15. 2	16. F	17. R	18. F	19. S	20. 2	21. 67	22. 1	23. 1	24. 00
3rd	25. 2	26. F	27. L	28. F	29. S	30. 2	31. 67	32. 1	33. 1	34. 00
4th	35. 2	36. F	37. C	38. F	39. S	40. 1	41. 67	42. 1	43. 1	44. 00
5th	45. 2	46. F	47. R	48. F	49. S	50. ~~2~~ 1	51. 67	52. 1	53. 1	54. 00
6th	55. 2	56. S	57. R	58. ~~F~~ D	59. ~~S~~ J	60. 2	61. 67	62. 1	63. 1	64. 00
7th	65. 2	66. C	67. L	68. F	69. S	70. 2	71. 67	72. 1	73. 1	74. 00
8th	75. 2	76. F	77. S	78. L	79. I	80. 2	81. ~~99~~ 67	82. ~~9~~ 2	83. ~~7~~ 1	84. ~~99~~ 00
9th	85. 2	86. H	87. L	88. L	89. I	90. 1	91. ~~97~~ 84	92. ~~9~~ 2	93. ~~7~~ 1	94. ~~99~~ 00
10th	95. 2	96. F	97. ~~X~~ L	98. ~~X~~ A	99. I	100. 1	101. ~~97~~ 84	102. ~~9~~ 2	103. ~~7~~ 1	104. ~~99~~ 00

If greater than 10 injuries, continue on reverse side. If greater than 25 injuries, code additional on Occupant Injury Data Supplement.

OCCUPANT INJURY DATA

	Source of Injury Data	O.I.C.-A.I.S Body Region	Aspect	Lesion	System Organ	A.I.S. Severity	Injury Source	Injury Source Confidence Level	Direct/ Indirect Injury	Occupant Area Intrusion No.
11th	2	F	L	L	I	1	~~97~~ 84	~~9~~ 2	~~7~~ 1	~~99~~ 00
12th	2	A	R	A	I	1	~~97~~ 84	~~9~~ 3	~~7~~ 1	~~99~~ 00
13th	2	M	U	L	I	1	~~97~~ 84	~~9~~ 3	~~7~~ 1	~~99~~ 00
14th	2	M	L	L	I	1	~~97~~ 84	~~9~~ 3	~~7~~ 1	~~99~~ 00
15th	2	T	L	L	I	1	~~97~~ 84	~~9~~ 3	~~7~~ 1	~~99~~ 00
16th	2	Q	R	L	I	1	97	9	7	99
17th	2	H	R	L	E	1	~~97~~ 67	~~9~~ 2	~~7~~ 1	~~99~~ 00
18th	2	H	L	L	E	1	~~97~~ 84	~~9~~ 2	~~7~~ 1	~~99~~ 00
19th	2	B	S	A	I	1	~~97~~ 84	~~9~~ 2	~~7~~ 1	~~99~~ 00
20th	2	B	S	L	I	1	~~97~~ 84	~~9~~ 2	~~7~~ 1	~~99~~ 00
21st	2	B	I	A	I	1	~~97~~ 84	~~9~~ 2	~~7~~ 1	~~99~~ 00
22nd	2	B	I	L	I	1	~~97~~ 84	~~9~~ 2	~~7~~ 1	~~99~~ 00
23rd	2	P	R	A	I	1	~~97~~ 84	~~9~~ 2	~~7~~ 1	~~99~~ 00
24th	2	B	S	A	I	1	~~97~~ 84	~~9~~ 2	~~7~~ 1	~~99~~ 00
25th										

OFFICIAL INJURY DATA — SOFT TISSUE INJURIES

Indicate the Location, Lesion, Detail (size, depth, fracture type, head injury clinical signs and neurological deficits), and Source of all injuries indicated by official sources (or from PAR or other unofficial sources if medical records and interviewee data are unavailable.)

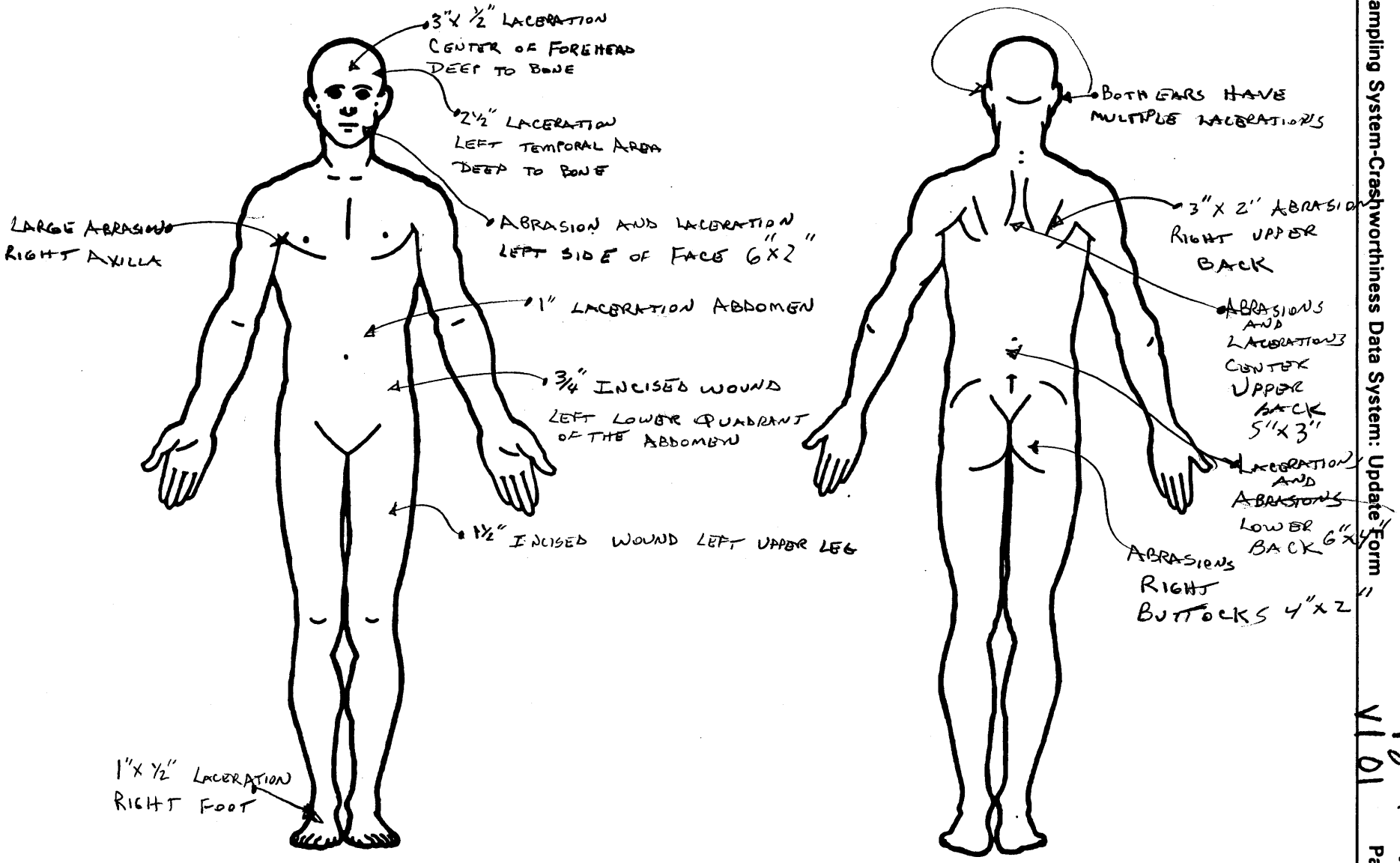

48-120A
V101

SOURCE OF INJURY DATA

OFFICIAL
(1) Autopsy records with or without hospital medical records
(2) Hospital medical records other than emergency room (e.g., dishcarge summary)
(3) Emergency room records only (including associated X-rays or other lab reports)
(4) Private physician, walk-in or emergency clinic

UNOFFICIAL
(5) Lay coroner report
(6) E.M.S. personnel
(7) Interviewee
(8) Other source (specify): _____
(9) Police

INJURY SOURCE

FRONT
(01) Windshield
(02) Mirror
(03) Sunvisor
(04) Steering wheel rim
(05) Steering wheel hub/spoke
(06) Steering wheel (combination of codes 04 and 05)
(07) Steering column, transmission selector lever, other attachment
(08) Add on equipment (e.g., CB, tape deck, air conditioner)
(09) Left instrument panel and below
(10) Center instrument panel and below
(11) Right instrument panel and below
(12) Glove compartment door
(13) Knee bolster
(14) Windshield including one or more of the following: front header, A-pillar, instrument panel, mirror, or steering assembly (driver side only)
(15) Windshield including one or more of the following: front header, A-pillar, instrument panel, or mirror (passenger side only)
(16) Other front object (specify): _____

LEFT SIDE
(20) Left side interior surface, excluding hardware or armrests
(21) Left side hardware or armrest
(22) Left A pillar
(23) Left B pillar
(24) Other left pillar (specify): _____
(25) Left side window glass or frame
(26) Left side window glass including one or more of the following: frame, window sill, A-pillar, B-pillar, or roof side rail.
(27) Other left side object (specify): _____
(28) Left side window sill

RIGHT SIDE
(30) Right side interior surface, excluding hardware or armrests
(31) Right side hardware or armrest
(32) Right A pillar
(33) Right B pillar
(34) Other right pillar (specify): _____
(35) Right side window glass or frame
(36) Right side window glass including one or more of the following: frame, window sill, A pillar, B pillar, or roof side rail.
(37) Other right side object (specify): _____
(38) Right side window sill

INTERIOR
(40) Seat, back support
(41) Belt restraint webbing/buckle
(42) Belt restraint B-pillar attachment point
(43) Other restraint system component (specify): _____
(44) Head restraint system
(45) Air bag
(46) Other occupants (specify): _____
(47) Interior loose objects
(48) Child safety seat (specify): _____
(49) Other interior object (specify): _____

ROOF
(50) Front header
(51) Rear header
(52) Roof left side rail
(53) Roof right side rail
(54) Roof or convertible top

FLOOR
(56) Floor (including toe pan)
(57) Floor or console mounted transmission lever, including console
(58) Parking brake handle
(59) Foot controls including parking brake

REAR
(60) Backlight (rear window)
(61) Backlight storage rack, door, etc.
(62) Other rear object (specify): _____

EXTERIOR of OCCUPANT'S VEHICLE
(65) Hood
(66) Outside hardware (e.g., outside mirror, antenna)
(67) Other exterior surface or tires (specify): (R) B-PILLAR
(68) Unknown exterior objects

EXTERIOR OF OTHER MOTOR VEHICLE
(70) Front bumper
(71) Hood edge
(72) Other front of vehicle (specify): _____
(73) Hood
(74) Hood ornament
(75) Windshield, roof rail, A-pillar
(76) Side surface
(77) Side mirrors
(78) Other side protrusions (specify) _____
(79) Rear surface
(80) Undercarriage
(81) Tires and wheels
(82) Other exterior of other motor vehicle (specify): _____
(83) Unknown exterior of other motor vehicle

OTHER VEHICLE OR OBJECT IN THE ENVIRONMENT
(84) Ground
(85) Other vehicle or object (specify) _____
(86) Unknown vehicle or object

NONCONTACT INJURY
(90) Fire in vehicle
(91) Flying glass
(92) Other noncontact injury source (specify): _____
(93) Air bag exhaust gases
(97) Injured, unknown source

INJURY SOURCE CONFIDENCE LEVEL

(1) Certain
(2) Probable
(3) Possible
(9) Unknown

DIRECT/INDIRECT INJURY

(1) Direct contact injury
(2) Indirect contact injury
(3) Noncontact injury
(7) Injured, unknown source

OCCUPANT INJURY CLASSIFICATION

O.I.C. Body Region

(M) Abdomen
(Q) Ankle—foot
(A) Arm (upper)
(B) Back-thoracolumbar spine
(C) Chest
(E) Elbow
(F) Face
(R) Forearm
(H) Head—skull
(U) Injured, unknown region
(K) Knee
(L) Leg (lower)
(Y) Lower limbs(s) (whole or unknown part)
(N) Neck—cervical spine
(P) Pelvic—hip
(S) Shoulder
(T) Thigh
(X) Upper limb(s) (whole or unknown part)
(O) Whole body
(W) Wrist—hand

Aspect of Injury

(A) Anterior—front
(B) Bilateral (rib fracture only)
(C) Central
(I) Inferior—lower
(U) Injured, unknown aspect
(L) Left
(P) Posterior—back
(R) Right
(S) Superior—upper
(W) Whole region

Lesion

(A) Abrasion
(M) Amputation
(V) Avulsion
(B) Burn
(K) Concussion
(C) Contusion
(N) Crush
(G) Detachment, separation
(D) Dislocation
(F) Fracture
(Z) Fracture and dislocation
(U) Injured, unknown lesion
(L) Laceration
(O) Other
(P) Perforation, puncture
(R) Rupture
(S) Sprain
(T) Strain
(E) Total severance, transection

System/Organ

(W) All systems in region
(A) Arteries—veins
(B) Brain
(D) Digestive
(E) Ears
(O) Eye
(H) Heart
(U) Injured, unknown system
(I) Integumentary
(J) Joints
(K) Kidneys
(L) Liver
(M) Muscles
(N) Nervous system
(P) Pulmonary—lungs
(R) Respiratory
(S) Skeletal
(C) Spinal cord
(Q) Spleen
(T) Thyroid, other endocrine gland
(V) Vertebrae

Abbreviated Injury Scale

(1) Minor injury
(2) Moderate injury
(3) Serious injury
(4) Severe injury
(5) Critical injury
(6) Maximum (untreatable)
(7) Injured, unknown severity

48-188A
V101

OFFICIAL INJURY DATA — SKELETAL INJURIES

Restrained?

✓ No

___ Yes

Blood Alcohol Level (mg/dl)

BAL = Ø

Glasgow Coma Scale Score

GCSS = ____

Units of Blood Given

Units = ____

Arterial Blood Gases

pH = __.__

PO_2 = ____

PCO_2 ____

HCO_3 ____

Indicate the Location, Lesion, Detail (size, depth, fracture type, head injury clinical signs and neurological deficits), and Source of all injuries indicated by official sources (or from PAR or other unofficial sources if medical records and interviewee data are unavailable.)

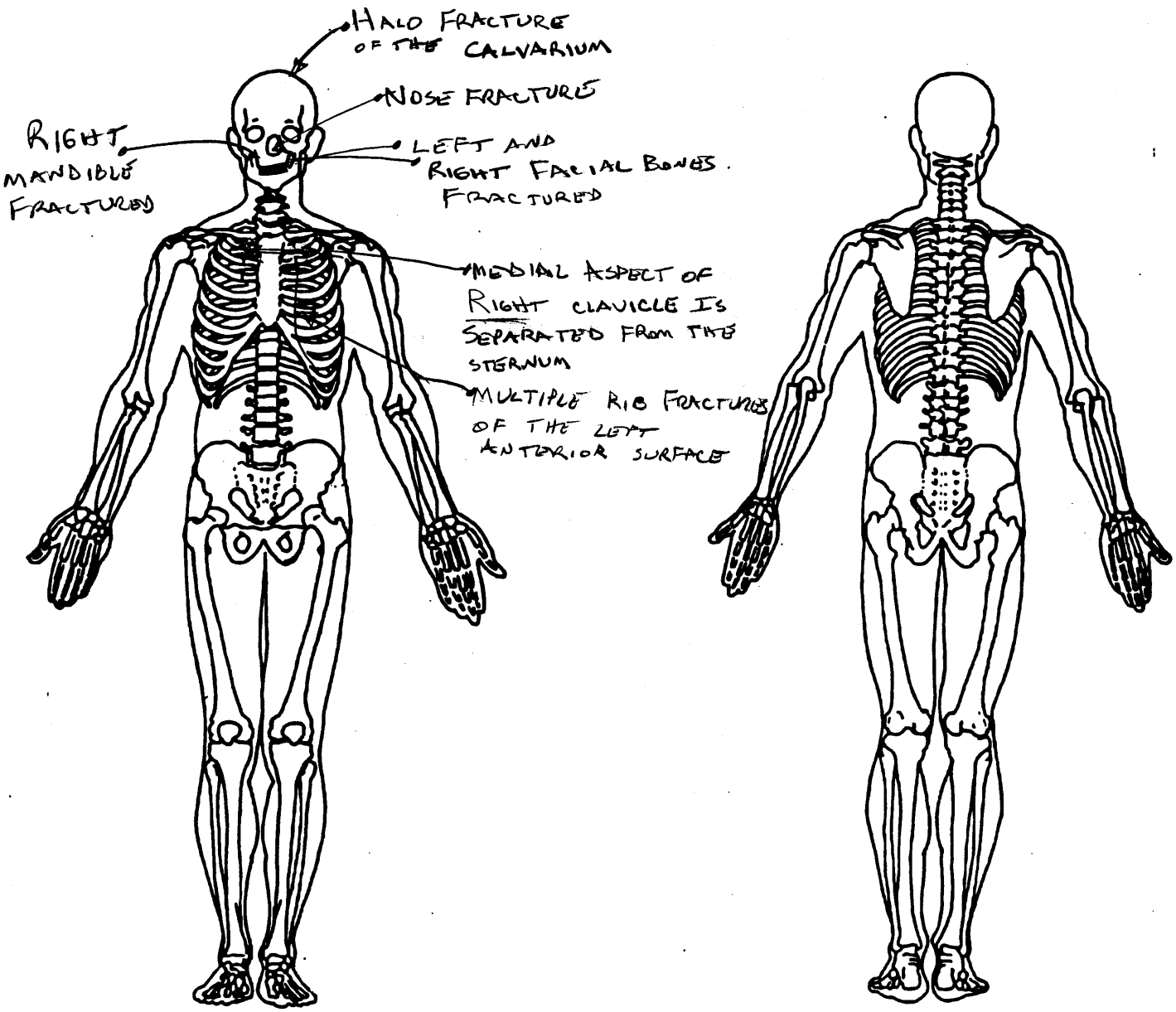

OFFICIAL INJURY DATA —INTERNAL INJURIES

Indicate the Location, Lesion, Detail (size, depth, fracture type, head injury clinical signs and neurological deficits), and Source of all injuries indicated by official sources (or from PAR or other unofficial sources if medical records and interviewee data are unavailable.)

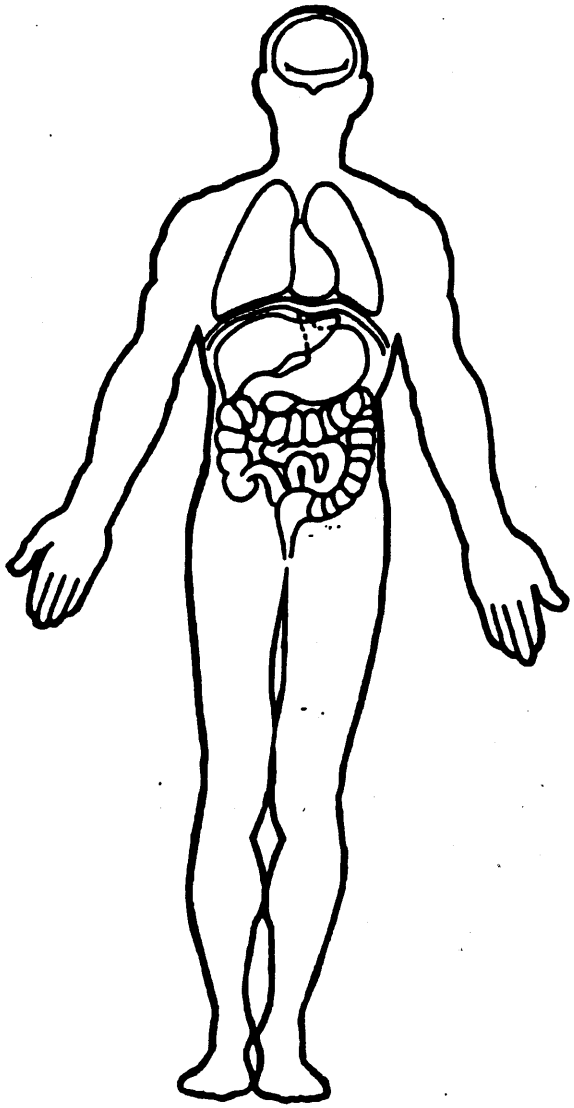

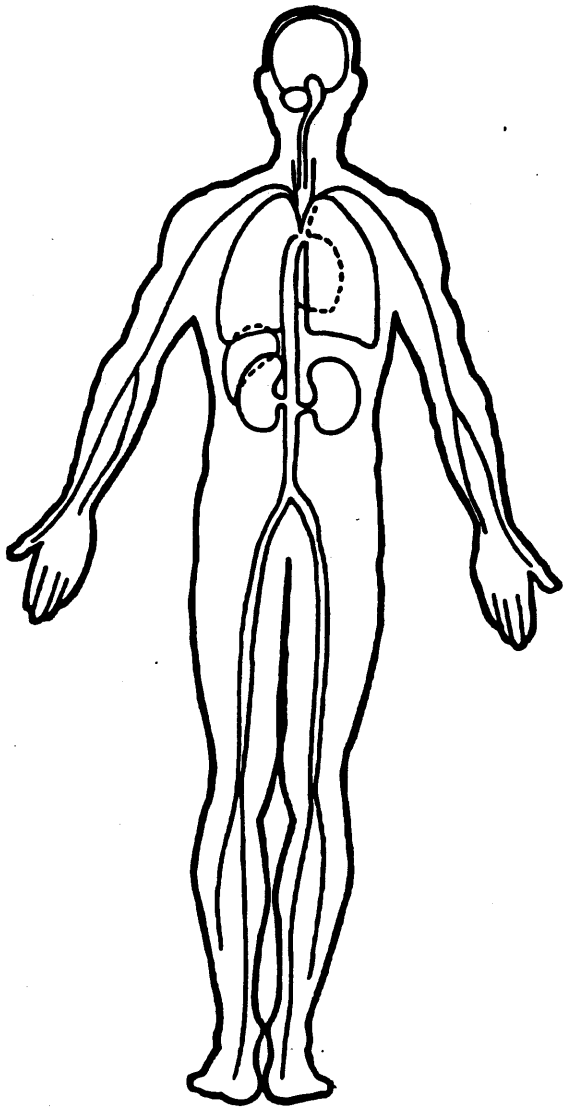

U.S. Department of Transportation
National Highway Traffic Safety Administration

CRASHPC PROGRAM SUMMARY

NATIONAL ACCIDENT SAMPLING SYSTEM
CRASHWORTHINESS DATA SYSTEM

Identifying Title

48	122A	01	[redacted] 92
Primary Sampling Unit	Case No.-Stratum	Accident Event Sequence No.	Date (Month, day, year) of Run

CRASHPC Vehicle Identification

	Year	Make	Model	NASS Veh. No.
Vehicle 1	1991	BMW	318i	1
Vehicle 2				

GENERAL INFORMATION

	VEHICLE 1	VEHICLE 2
Size	2	
Weight	2635 (Curb) + 134 (Occupant(s)) + 0 (Cargo) = 2769	___ (Curb) + ___ (Occupant(s)) + ___ (Cargo) = ___
CDC	01FDEW2	
PDOF	+20	
Stiffness	2	

SCENE INFORMATION

Rest and Impact Positions [ ] No, *Go To Damage Information* [ ] Yes

	VEHICLE 1	VEHICLE 2
Rest Position		
X	___.___	___.___
Y	___.___	___.___
PSI	___.___	___.___
Impact Position		
X	___.___	___.___
Y	___.___	___.___
PSI	___.___	___.___
Slip Angle	___	___

VEHICLE MOTION

Sustained Contact [ ] No [ ] Yes

	VEHICLE 1	VEHICLE 2
Skidding	[ ] No [ ] Yes	[ ] No [ ] Yes
Skidding Stop Before Rest	[ ] No [ ] Yes	[ ] No [ ] Yes
Impact Position		
X	___.___	___.___
Y	___.___	___.___
PSI	___.___	___.___
Curved Path	[ ] No [ ] Yes	[ ] No [ ] Yes
Point on Path	X ___.___ Y ___.___	X ___.___ Y ___.___
Rotation Direction	[ ] None [ ] CW [ ] CCW	[ ] None [ ] CW [ ] CCW
Rotation >360°	[ ] No [ ] Yes	[ ] No [ ] Yes

FRICTION INFORMATION

Coefficient of Friction . ___ ___ ___

Rolling Resistance Option ___

Vehicle 1 Rolling Resistance

LF ___ . ___ ___ RF ___ . ___ ___

LF ___ . ___ ___ RF ___ . ___ ___

Vehicle 2 Rolling Resistance

LF ___ . ___ ___ RF ___ . ___ ___

LF ___ . ___ ___ RF ___ . ___ ___

TRAJECTORY INFORMATION

Trajectory Data [ ] No [ ] Yes

If No, Go To Damage Information

Vehicle 1 Steer Angles

LF ___ ___ ___ RF ___ ___ ___

LF ___ ___ ___ RF ___ ___ ___

Vehicle 2 Steer Angles

LF ___ ___ ___ RF ___ ___ ___

LF ___ ___ ___ RF ___ ___ ___

Terrain Boundary [ ] No [ ] Yes

First Point

X ___ ___ ___ . ___ Y ___ ___ ___ . ___

Second Point

X ___ ___ ___ . ___ Y ___ ___ ___ . ___

Secondary Coefficient of Friction . ___ ___ ___

DAMAGE INFORMATION

	VEHICLE 1	VEHICLE 2
Damage Length	58.0	___ ___ ___ . ___ ___
Crush Depths C1	13.75	___ ___ . ___ ___
C2	10.5	___ ___ . ___ ___
C3	7.75	___ ___ . ___ ___
C4	6.0	___ ___ . ___ ___
C5	5.0	___ ___ . ___ ___
C6	4.0	___ ___ . ___ ___
Damage Offset	± 0.0	± ___ ___ ___ . ___ ___

IF THIS COMMON IMPACT WAS WITH A MOTOR VEHICLE *NOT IN TRANSPORT*, FILL IN THE INFORMATION BELOW.

Model Year: _____

Make: _____

Model: _____

VIN: _____

The Weight, CDC, Scene Data and Damage Information for this vehicle should be recorded above.

Complete and ATTACH the appropriate vehicle damage sketch and dimensions to the Form.

DIMENSIONS AND INERTIAL PROPERTIES

A1	=	46.3	IN.	A2	=	50.0	IN.
B1	=	50.1	IN.	B2	=	50.0	IN.
TR1	=	54.6	IN.	TR2	=	50.0	IN.
I1	=	21246.3	LB-SEC**2-IN	I2	=	2600104000.0	LB-SEC**2-IN
M1	=	7.200	LB-SEC**2/IN	M2	=	2600.104	LB-SEC**2/IN
XF1	=	83.3	IN.	XF2	=	50.0	IN.
XR1	=	-91.6	IN.	XR2	=	-50.0	IN.
YS1	=	33.6	IN.	YS2	=	50.0	IN.

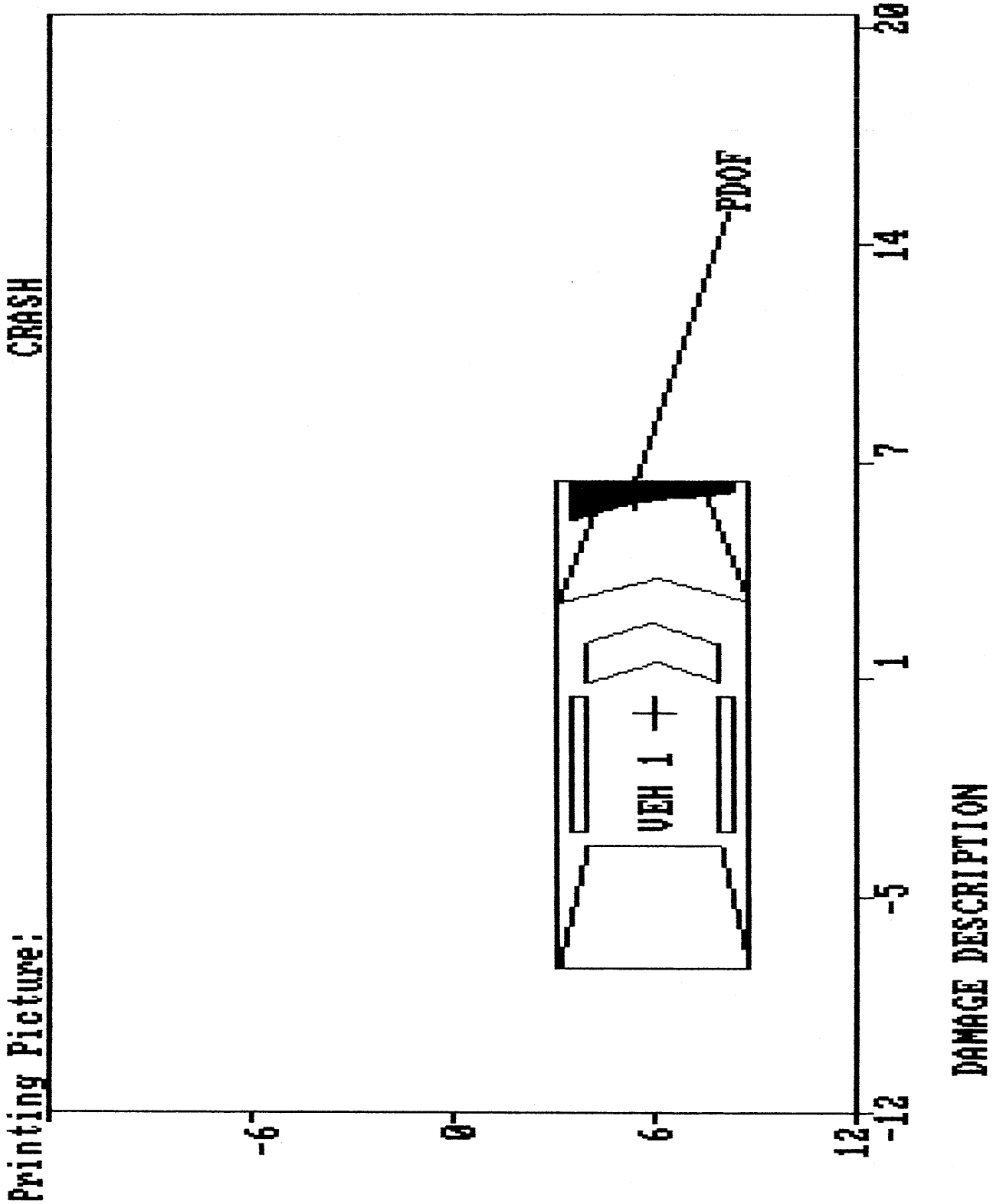

DIRECTION OF ANGULAR VELOCITY CHANGE OF VEHICLE #1
IS NOT COMPATIBLE WITH MOMENT ARM OF PRINCIPLE FORCE,
ACCORDING TO DAMAGE BASED CALCULATIONS. REVIEW DAMAGE
DATA IF RESULTS ARE QUESTIONABLE.

SUMMARY OF CRASHPC RESULTS (USING SPINOUT)

P48 122A

SPEED CHANGE (DAMAGE)		TOTAL(MPH)	LONG.(MPH)	LAT.(MPH)	ANG.(DEG)
	VEH #1	13.4	-12.6	-4.6	20.0
	VEH #2	.0	.0	.0	.0

ENERGY DISSIPATED BY DAMAGE VEH#1: 22888.2 FT-LB VEH#2: .0 FT-LB

SUMMARY OF DAMAGE DATA (* INDICATES DEFAULT VALUE)

VEHICLE # 1			VEHICLE # 2		
TYPE--------CATEGORY	2		TYPE--------CATEGORY	11	
STIFFNESS---CATEGORY	2		STIFFNESS---CATEGORY	0	
WEIGHT------	2769.0 LBS.		WEIGHT------	1000000.0 LBS.	*
CDC----------	01FDEW2		CDC----------	BARRIER	
L----------	58.0 IN.		L----------	.0 IN.	*
C1----------	13.8 IN.		C1----------	.0 IN.	*
C2----------	10.5 IN.		C2----------	.0 IN.	*
C3----------	7.8 IN.		C3----------	.0 IN.	*
C4----------	6.0 IN.		C4----------	.0 IN.	*
C5----------	5.0 IN.		C5----------	.0 IN.	*
C6----------	4.0 IN.		C6----------	.0 IN.	*
D----------	.0		D----------	.0	*
RHO----------	1.00	*	RHO----------	1.00	*
ANG----------	20.0 DEG.		ANG----------	.0 DEG.	*
D'----------	-6.0 IN.		D'----------	.0 IN.	

NO Entry Errors

1992 ACCIDENT FORM

1. PSU Number 48 2. Case Number 122A

IDENTIFICATION

3. No. of G.V. Forms Sub. 01 4. Accident Date [redacted]/92 5. Accident Time 0713

SPECIAL STUDIES INDICATORS

6. SS12 0 7. SS13 0 8. SS14 0 9. SS15 0 10. SS16 0

NUMBER OF EVENTS 11. Number of Recorded Events in Accident 02

ACCIDENT EVENTS

Accident Sequence Number	Vehicle Number	Class of Vehicle	General Area of Damage	Veh. Num. or Obj. Cont.	Class of Vehicle	General Area of Damage
012. 01	013. 01	014. 02	015. F	016. 44	017. 00	018. 0
019. 02	020. 01	021. 02	022. R	023. 31	024. 00	025. N

****

1992 GENERAL VEHICLE FORM

1. PSU Number 48
2. Case Number 122A
3. Vehicle Number 01

VEHICLE IDENTIFICATION

4. Model Year	91	5. Make	34
6. Model	034	7. Body Type	04
8. VIN	WBAAJ9317ME[redacted]		

OFFICIAL RECORDS

9. Police Reported Disposition	1	10. Police Reported Travel Speed	99
11. Police Rep. Alcohol Presence	0	12. Alcohol Test Result for Driver	96

ACCIDENT RELATED

13. Speed Limit	45	14. Attempted Avoid. Manuever	99
15. Accident Type	07		

OCCUPANT RELATED

16. Driver Presence in Vehicle	1	17. No. Occupants This Vehicle	01
18. No. Occupant Forms Submitted	01		

VEHICLE WEIGHT ITEMS

19. Vehicle Curb Weight	026	20. Vehicle Cargo Weight	00

RECONSTRUCTION DATA

21. Towed Trailing Unit	0	22. Trajectory Data Documented	1
23. Post Col. Cond. of Tree/Pole	0	24. Rollover	1

OVERRIDE/UNDERRIDE (this vehicle)

25. F 0 26. R 0

HEADING ANGLE AT IMPACT FOR HIGHEST DELT'

27. Heading Angle This Vehicle	998	28. Heading Angle Other Vehicle	998
29. Basis for Total Delta V	1		

COMPUTER GENERATED DELTA V

30. Total Delta V	13
31. Longitudinal Component of Delta V	-13
32. Lateral Component of Delta V	-05
33. Energy Absorption	0239
34. Confidence in Reconstruction Program Results	4
35. Type of Vehicle Inspection	1
36. Is this an AOPS vehicle?	1
37. Police Reported Other Drug Presence	0
38. Police Observation/Perception Test Type for Driver	0
39. Other Drug Specimen Test Type for Driver	0

DRUG EVALUATION CLASSIFICATION/OTHER TEST RESULTS FOR DRIVER

	DEC Observation/ Perception Test Results	Specimen Test Results
Narcotic Drug	40. 0	41. 0
Depressant Drug	42. 0	43. 0
Stimulant Drug	44. 0	45. 0
Hallucinogen Drug	46. 0	47. 0
Cannabinoid Drug	48. 0	49. 0
Phencyclidine(PCP)	50. 0	51. 0
Inhalant Drug	52. 0	53. 0
Other Drug	54. 0	55. 0

OTHER DATA

56. Driver's Zip Code [redacted]
57. Driver's Race/Ethnic Origin 1
58. Vehicle Special Use (This Trip) 0

ROLLOVER DATA

59. Rollover Initiation Type 2
60. Location of Rollover Initiation 4
61. Rollover Initiation Object Contacted 44
62. Location on Vehicle Where Initial Principal Tripping Force Applied 3
63. Direction of Initial Roll 1

PRECRASH DATA

64. Pre-Event Movement (Prior to Recognition of Critical Event) 13
65. Initial Critical (Precrash) Event 06
66. Precrash Stability After Avoidance Maneuver 4
67. Precrash Directional Consequences Corrective Action 4

GG0421 2 If ROLLOVER GV24 equals 1-9, then BASIS FOR DELTA V GV29 should
GG0422 equal 4 or 5.

****

1992 VEHICLE EXTERIOR FORM

1. PSU Number 48
2. Case Number 122A
3. Vehicle Number 01

COLLISION DEFORMATION CLASSIFICATION
HIGHEST DELTA "V"

Accident Sequence Number	Object Contacted	Direction of Force	Deform. Location	Specific Longitud. or lat. Location	Specific Vertical or Lateral Location	Type of Damage Distrib.	Deform. Extent
4. 01	5. 44	6. 01	7. F	8. D	9. E	10. W	11. 02

SECOND HIGHEST DELTA "V"

12. [illegible]	13. 31	14. 00	15. R	16. D	17. A	18. O	19. 02

CRUSH PROFILE
HIGHEST DELTA "V"

20.	21.	C1	C2	C3	C4	C5	C6	22.
L								+/-D
058		14	11	08	06	05	04	000

SECOND HIGHEST DELTA "V"

23.	24.	C1	C2	C3	C4	C5	C6	25.
L								+/-D

26. CDCS Documented but not coded 1

27. Researchers Assess. Veh. Disp. 1

28. Original Wheelbase 101.2

29. Multi-staged Manufactured/Certified Altered Vehicle? 0
30. Fire Occurrence 0
31. Origin of Fire 0
32. Type of Fuel Tank 1

****

1992 VEHICLE INTERIOR FORM

1. PSU Number 48
2. Case Number 122A
3. Vehicle Number 01

INTEGRITY

4. Passenger Compartment 12

Door, Tailgate or Hatch opening

5. LF 1 6. RF 3 7. LR 1 8. RR 3 9. TG/H 0

Damage/Failure Associated with Door, Tailgate or Hatch Opening in Collision

10. LF 0 11. RF 0 12. LR 0 13. RR 0 14. TG/H 0

GLAZING

Glazing Damage

15. WS 4 16. LF 0 17. RF 6 18. LR 0 19. RR 0
20. BL 0 21. Roof 8 22. Other 0

Glazing Damage from Occupant Contact

23. WS 0 24. LF 0 25. RF 9 26. LR 0 27. RR 0
28. BL 0 29. Roof 0 30. Other 0

GLAZING (Cont.)

Type of Window/Windshield Glazing

31. WS 1 32. LF 0 33. RF 2 34. LR 0 35. RR 0
36. BL 0 37. Roof 0 38. Other 0

Window Precrash Glazing Status

39. WS 1 40. LF 0 41. RF 2 42. LR 0 43. RR 0
44. BL 0 45. Roof 0 46. Other 0

OCCUPANT AREA INTRUSION

Location of Intrusion	Intruding Component	Magnitude of Intrusion	Dominant Crush Direction
47. 13	48. 10	49. 1	50. 3
51.	52.	53.	54.
55.	56.	57.	58.
59.	60.	61.	62.
63.	64.	65.	66.
67.	68.	69.	70.
71.	72.	73.	74.
75.	76.	77.	78.
79.	80.	81.	82.
83.	84.	85.	86.

STEERING COLUMN

87. Steering Column Type	2	88. Steering Column Collapse	
89. Vertical Movement(+/-)		90. Lateral Movement(+/-)	
91. Longitudinal Movement(+/-)		92. Steering Rim/Spoke Deform	0
93. Location of Rim/Spoke Deform	00		

INSTRUMENT PANEL

94. Odometer Reading	015,000	95. Instrument Panel Damage	1
96. Knee Bolsters Deformed	0	97. Glove Door Open	1

****

1992 OCCUPANT ASSESSMENT FORM

1. PSU Number 48
2. Case Number 122A
3. Vehicle Number 01
4. Occupant Number 01

OCCUPANT'S CHARACTERISTICS

5. Age 32 6. Sex 2 7. Height 99 8. Weight 999 9. Role 1
10. Seat Position 11 11. Posture 9

EJECTION/ENTRAPMENT

12. Ejection 1 13. Ejection Area 3 14. Ejection Medium 4
15. Medium Status 2 16. Entrapment 0

RESTRAINT SYSTEM AND SEAT EVALUATION

17. Belt System Availability 4 18. Belt System Use 00
19. Proper Use of Belt 0 20. Belt Failure Modes During Impact 0
21. Air Bag Availability 1 22. Air Bag Deployment 1
23. Did Air Bag Fail? 1 24. Police Reported Restraint Use 7
25. Head Restraint Type/Damage by Occupant at this Position 3
26. Seat Type 01 27. Seat Performance 1

CHILD SAFETY SEAT

28. Child/Safety Seat Make/Model 000
29. Type of Child Safety Seat 0
30. Orientation 00
31. Harness 00
32. Shield 00
33. Tether 00

INJURY CONSEQUENCES

34. Severity (Police Rating)	4	35. Treatment - Mortality	1
36. Type of Med. Facility (Initial)	0	37. Hospital Stay	00
38. Working Days Lost	62	39. Time to Death	01

MEDICALLY REPORTED CAUSE OF DEATH

40. Cause #1 99 41. Cause #2 00 42. Cause #3 00

43. Number of Recorded Injuries 01

44. Automatic (Passive) Belt System Availability/Function	0
45. Automatic (Passive) Belt System Use	0
46. Automatic (Passive) Belt System Type	0
47. Proper Use of Automatic (Passive) Belt System	0
48. Automatic (Passive) Belt System Failure Mode	0
49. Seat Orientation (this Occupant Position)	1
50. Glasgow Coma Scale (GCS) Score	01
51. Was the Occupant Given Blood?	1
52. Arterial Blood Gases (ABG) - HCO3	01

```
HH1271  2  ******* THIS CASE SHOWS EJECTION WITH RESTRAINT USEAGE. ******
HH1272     ******  CHECK YOUR DATA AND IF CORRECT, NOTIFY YOUR ZONE ******
HH1273     EJECTION OA12 is equal to 1-3 and (MANUAL BELT USE OA18 does not
HH1274     equal 00 or AIR BAG DEPLOYMENT OA22 does not equal 0
HH1275     or AUTOMATIC BELT USE OA45 does not equal 0).

HH1281  2  ******** THIS VEHICLE IS INICATED AS HAVING AN AIRBAG. *****
HH1282     ****** CHECK YOUR DATA AND IF CORRECT, NOTIFY YOUR ZONE *******
HH1283     AIR BAG AVAILABILITY/FUNCTION OA21 equals 1-3.
```

****

1992 OCCUPANT INJURY FORM

1. PSU NUMBER 48
2. CASE NUMBER 122A
3. VEHICLE NUMBER 01
4. OCCUPANT NUMBER 01

INJURY DATA

SOURCE OF INJURY DATA	BODY REGION	ASPECT	LESION	SYSTEM ORGAN	A.I.S. SEVERITY	INJURY SOURCE	INJURY SOURCE CONFID. LEVEL	DIR./ INDIR. INJURY	OCC. AREA INTR. NO.
01. 7	H	W	N	W	6	67	1	1	00

****

EH0011 2 If TREATMENT 0A35 equals 1, then 1st DEFORMATION EXTENT EV11
EH0012 should be greater than 03.
VEH NUM = 01 OCCUPANT NUM = 01

1992 NATIONAL ACCIDENT SAMPLING SYSTEM

ERROR SUMMARY SCREEN [redacted], 1992

CURRENT VERSION: 5.01

FORM NAME	NUMBER OF DOLLAR SIGNS	NUMBER OF LEVEL 1 ERRORS	NUMBER OF LEVEL 2 ERRORS	VERSION NUMBER CONSISTENT
Accident	0	0	0	Y
General Vehicle	0	0	1	Y
Vehicle Exterior	0	0	0	Y
Vehicle Interior	0	0	0	Y
Occupant Assessment	0	0	2	Y
Occupant Injury	0	0	0	Y
Total Inter Errors		0	1	
Total Case Errors	0	0	4	

Zone 3
[redacted] 92

1992 GENERAL VEHICLE FORM

1. PSU Number 48
2. Case Number 122A
3. Vehicle Number 01

VEHICLE IDENTIFICATION

4. Model Year	91	5. Make	34
6. Model	034	7. Body Type	04
8. VIN	WBAAJ9317ME[redacted]		

OFFICIAL RECORDS

9. Police Reported Disposition	1	10. Police Reported Travel Speed	99
11. Police Rep. Alcohol Presence	0	12. Alcohol Test Result for Driver	96

ACCIDENT RELATED

13. Speed Limit	45	14. Attempted Avoid. Manuever	99
15. Accident Type	07		

OCCUPANT RELATED

16. Driver Presence in Vehicle	1	17. No. Occupants This Vehicle	01
18. No. Occupant Forms Submitted	01		

VEHICLE WEIGHT ITEMS

19. Vehicle Curb Weight	026	20. Vehicle Cargo Weight	00

RECONSTRUCTION DATA

21. Towed Trailing Unit	0	22. Trajectory Data Documented	1
23. Post Col. Cond. of Tree/Pole	0	24. Rollover	1

OVERRIDE/UNDERRIDE (this vehicle)
25. F 0 26. R 0

HEADING ANGLE AT IMPACT FOR HIGHEST DELTA V

27. Heading Angle This Vehicle	998	28. Heading Angle Other Vehicle	998
29. Basis for Total Delta V	1		

COMPUTER GENERATED DELTA V

30. Total Delta V	13
31. Longitudinal Component of Delta V	-13
32. Lateral Component of Delta V	-05
33. Energy Absorption	0239
34. Confidence in Reconstruction Program Results	4
35. Type of Vehicle Inspection	1
36. Is this an AOPS vehicle?	1

37. Police Reported Other Drug Presence 0

38. Police Observation/Perception Test Type for Driver 0
39. Other Drug Specimen Test Type for Driver 0

DRUG EVALUATION CLASSIFICATION/OTHER TEST RESULTS FOR DRIVER

	DEC Observation/ Perception Test Results	Specimen Test Results
Narcotic Drug	40. 0	41. 0
Depressant Drug	42. 0	43. 0
Stimulant Drug	44. 0	45. 0
Hallucinogen Drug	46. 0	47. 0
Cannabinoid Drug	48. 0	49. 0
Phencyclidine(PCP)	50. 0	51. 0
Inhalant Drug	52. 0	53. 0
Other Drug	54. 0	55. 0

OTHER DATA

56. Driver's Zip Code [redacted]
57. Driver's Race/Ethnic Origin 1
58. Vehicle Special Use (This Trip) 0

ROLLOVER DATA

59. Rollover Initiation Type 2
60. Location of Rollover Initiation 4
61. Rollover Initiation Object Contacted 44
62. Location on Vehicle Where Initial Principal Tripping Force Applied 3
63. Direction of Initial Roll 1

PRECRASH DATA

64. Pre-Event Movement (Prior to Recognition of Critical Event) 13
65. Initial Critical (Precrash) Event 06
66. Precrash Stability After Avoidance Maneuver 9
67. Precrash Directional Consequences Corrective Action 9

GG0421 2 If ROLLOVER GV24 equals 1-9, then BASIS FOR DELTA V GV29 should
GG0422 equal 4 or 5.

****

Zone 3
[redacted] 92

1992 GENERAL VEHICLE FORM

1. PSU Number 48
2. Case Number 122A
3. Vehicle Number 01

VEHICLE IDENTIFICATION

4. Model Year 91
5. Make 34
6. Model 034
7. Body Type 04
8. VIN WBAAJ9317ME[redacted]

OFFICIAL RECORDS

9. Police Reported Disposition 1
10. Police Reported Travel Speed 99
11. Police Rep. Alcohol Presence 0
12. Alcohol Test Result for Driver 00

ACCIDENT RELATED

13. Speed Limit 45
14. Attempted Avoid. Manuever 99
15. Accident Type 07

OCCUPANT RELATED

16. Driver Presence in Vehicle 1
17. No. Occupants This Vehicle 01
18. No. Occupant Forms Submitted 01

VEHICLE WEIGHT ITEMS

19. Vehicle Curb Weight 026
20. Vehicle Cargo Weight 00

RECONSTRUCTION DATA

21. Towed Trailing Unit 0
22. Trajectory Data Documented 1
23. Post Col. Cond. of Tree/Pole 0
24. Rollover 1

OVERRIDE/UNDERRIDE (this vehicle)

25. F 0 26. R 0

HEADING ANGLE AT IMPACT FOR HIGHEST DELTA V

27. Heading Angle This Vehicle 998
28. Heading Angle Other Vehicle 998
29. Basis for Total Delta V 1

COMPUTER GENERATED DELTA V

30. Total Delta V 13
31. Longitudinal Component of Delta V -13
32. Lateral Component of Delta V -05
33. Energy Absorption 0239
34. Confidence in Reconstruction Program Results 4
35. Type of Vehicle Inspection 1

36. Is this an AOPS vehicle? 1

37. Police Reported Other Drug Presence 0

38. Police Observation/Perception Test Type for Driver 0
39. Other Drug Specimen Test Type for Driver 2

DRUG EVALUATION CLASSIFICATION/OTHER TEST RESULTS FOR DRIVER

	DEC Observation/ Perception Test Results	Specimen Test Results
Narcotic Drug	40. 0	41. 7
Depressant Drug	42. 0	43. 7
Stimulant Drug	44. 0	45. 7
Hallucinogen Drug	46. 0	47. 7
Cannabinoid Drug	48. 0	49. 7
Phencyclidine(PCP)	50. 0	51. 7
Inhalant Drug	52. 0	53. 7
Other Drug	54. 0	55. 7

OTHER DATA

56. Driver's Zip Code [redacted]
57. Driver's Race/Ethnic Origin 1
58. Vehicle Special Use (This Trip) 0

ROLLOVER DATA

59. Rollover Initiation Type 2
60. Location of Rollover Initiation 4
61. Rollover Initiation Object Contacted 44
62. Location on Vehicle Where Initial Principal Tripping Force Applied 3
63. Direction of Initial Roll 1

PRECRASH DATA

64. Pre-Event Movement (Prior to Recognition of Critical Event) 13
65. Initial Critical (Precrash) Event 06
66. Precrash Stability After Avoidance Maneuver 9
67. Precrash Directional Consequences Corrective Action 9

GG0421 2 If ROLLOVER GV24 equals 1-9, then BASIS FOR DELTA V GV29 should
GG0422 equal 4 or 5.

****

1992 OCCUPANT ASSESSMENT FORM

1. PSU Number 48
2. Case Number 122A
3. Vehicle Number 01
4. Occupant Number 01

OCCUPANT'S CHARACTERISTICS

5. Age 02 6. Sex 2 7. Height 61 8. Weight 131 9. Role 1
10. Seat Position 11 11. Posture 9

EJECTION/ENTRAPMENT

12. Ejection 1 13. Ejection Area 3 14. Ejection Medium 4
15. Medium Status 2 16. Entrapment 0

RESTRAINT SYSTEM AND SEAT EVALUATION

17. Belt System Availability 4 18. Belt System Use 00
19. Proper Use of Belt 0 20. Belt Failure Modes During Impact 0
21. Air Bag Availability 1 22. Air Bag Deployment 1
23. Did Air Bag Fail? 1 24. Police Reported Restraint Use 7
25. Head Restraint Type/Damage by Occupant at this Position 3
26. Seat Type 01 27. Seat Performance 1

CHILD SAFETY SEAT

28. Child/Safety Seat Make/Model 000
29. Type of Child Safety Seat 0
30. Orientation 00
31. Harness 00
32. Shield 00
33. Tether 00

INJURY CONSEQUENCES

34. Severity (Police Rating)	4	35. Treatment - Mortality	1
36. Type of Med. Facility (Initial)	0	37. Hospital Stay	00
38. Working Days Lost	62	39. Time to Death	01

MEDICALLY REPORTED CAUSE OF DEATH

40. Cause #1 99	41. Cause #2 00	42. Cause #3 00
43. Number of Recorded Injuries 24		

44. Automatic (Passive) Belt System Availability/Function	0
45. Automatic (Passive) Belt System Use	0
46. Automatic (Passive) Belt System Type	0
47. Proper Use of Automatic (Passive) Belt System	0
48. Automatic (Passive) Belt System Failure Mode	0
49. Seat Orientation (this Occupant Position)	1
50. Glasgow Coma Scale (GCS) Score	01
51. Was the Occupant Given Blood?	1
52. Arterial Blood Gases (ABG) - HCO3	01

```
HH0021  2  Given OCCUPANT AGE OA05 and OCCUPANT SEX OA06, OCCUPANT HEIGHT
HH0022     OA07 is questionable.  See Table A1.

HH0031  2  If OCCUPANT ROLE OA09 equals 1, then OCCUPANT AGE OA05 should
HH0032     not be less than 13.

HH1271  2  ******* THIS CASE SHOWS EJECTION WITH RESTRAINT USEAGE. ******
HH1272     ******  CHECK YOUR DATA AND IF CORRECT, NOTIFY YOUR ZONE ******
HH1273     EJECTION OA12 is equal to 1-3 and (MANUAL BELT USE OA18 does not
HH1274     equal 00 or AIR BAG DEPLOYMENT OA22 does not equal 0
HH1275     or AUTOMATIC BELT USE OA45 does not equal 0).
```

```
HH1281  2  ******** THIS VEHICLE IS INICATED AS HAVING AN AIRBAG. *****
HH1282     ****** CHECK YOUR DATA AND IF CORRECT, NOTIFY YOUR ZONE *******
HH1283     AIR BAG AVAILABILITY/FUNCTION OA21 equals 1-3.
```

****

```
EH0011  2  If TREATMENT OA35 equals 1, then 1st DEFORMATION EXTENT EV11
EH0012     should be greater than 03.
           VEH NUM = 01      OCCUPANT NUM = 01
```

1992 OCCUPANT INJURY FORM

1. PSU NUMBER 48
2. CASE NUMBER 122A
3. VEHICLE NUMBER 01
4. OCCUPANT NUMBER 01

INJURY DATA

	SOURCE OF INJURY DATA	BODY REGION	ASPECT	LESION	SYSTEM ORGAN	A.I.S. SEVERITY	INJURY SOURCE	INJURY SOURCE CONFID. LEVEL	DIR./ INDIR. INJURY	OCC. AREA INTR. NO.
01.	2	H	S	F	S	2	67	1	1	00
02.	2	F	R	F	S	2	67	1	1	00
03.	2	F	L	F	S	2	67	1	1	00
04.	2	F	C	F	S	1	67	1	1	00
05.	2	F	R	F	S	1	67	1	1	00
06.	2	S	R	D	J	2	67	1	1	00
07.	2	C	L	F	S	2	67	1	1	00
08.	2	F	S	L	I	2	67	2	1	00
09.	2	H	L	L	I	1	84	2	1	00
10.	2	F	L	A	I	1	84			

****
Sector not found error reading file
C:\LOG\CK48122A.PRN

Zone 3
[redacted]92

```
HH0021  2  Given OCCUPANT AGE OA05 and OCCUPANT SEX OA06, OCCUPANT HEIGHT
HH0022     OA07 is questionable.  See Table A1.

HH0031  2  If OCCUPANT ROLE OA09 equals 1, then OCCUPANT AGE OA05 should
HH0032     not be less than 13.

HH1271  2  ******* THIS CASE SHOWS EJECTION WITH RESTRAINT USEAGE. ******
HH1272     ******  CHECK YOUR DATA AND IF CORRECT, NOTIFY YOUR ZONE ******
HH1273     EJECTION OA12 is equal to 1-3 and (MANUAL BELT USE OA18 does not
HH1274     equal 00 or AIR BAG DEPLOYMENT OA22 does not equal 0
HH1275     or AUTOMATIC BELT USE OA45 does not equal 0).

HH1281  2  ******** THIS VEHICLE IS INICATED AS HAVING AN AIRBAG. *****
HH1282     ****** CHECK YOUR DATA AND IF CORRECT, NOTIFY YOUR ZONE *******
HH1283     AIR BAG AVAILABILITY/FUNCTION OA21 equals 1-3.

48122A00000011[redacted]925.011000000000010713000000[redacted]92[redacted]92        [redacted]92[redacted]91000
001000000185591
48122A00010012[redacted]925.011000000000102F44000
48122A00020012[redacted]925.011000000000102R3100N
48122A01000021        5.01 00000100091340340 4WBAAJ9317ME[redacted]19900045990710101026
000101009989981 13-13-050239411
48122A01000022        5.01 0000010000020707070707070707[redacted]10244431130699
48122A01000031        5.01 000000000014401FDEW02023100RDA00205814110806050 4 000
                  1110120001
48122A01000041        5.01 00000000012131300000040600080009000001020000010200000
48122A01000042        5.01 00000000131013
                2            000015101
48122A01010051        5.01 0000040000226113111191342040000111730110000000000004100
062019900002400000101101
48122A01010161        5.01 0000000002HSFS2671100
48122A01010261        5.01 0000000002FRFS2671100
48122A01010361        5.01 0000000002FLFS2671100
48122A01010461        5.01 0000000002FCFS1671100
48122A01010561        5.01 0000000002FRFS1671100
48122A01010661        5.01 0000000002SRDJ2671100
48122A01010761        5.01 0000000002CLFS2671100
48122A01010861        5.01 0000000002FSLI2672100
48122A01010961        5.01 0000000002HLLI1842100
48122A01011061        5.01 0000000002FLAI1842100
48122A01011161        5.01 0000000002FLLI1842100
48122A01011261        5.01 0000000002ARAI1843100
48122A01011361        5.01 0000000002MULI1843100
48122A01011461        5.01 0000000002MLLI1843100
48122A01011561        5.01 0000000002TLLI1843100
48122A01011661        5.01 0000000002QRLI1979799
48122A01011761        5.01 0000000002HRLE1672100
48122A01011861        5.01 0000000002HLLE1842100
48122A01011961        5.01 0000000002BSAI1842100
48122A01012061        5.01 0000000002BSLI1842100
48122A01012161        5.01 0000000002BIAI1842100
48122A01012261        5.01 0000000002BILI1842100
48122A01012361        5.01 0000000002PRAI1842100
48122A01012461        5.01 0000000002BSAI1842100
48122A88888888 0526925.011000000000YY0101YYY0101Y000000000000000000000000000000000
00000000
48122A99999999 0526925.011000000000000000000000010000000000000000000000000100000
00000000000000
EH0011  2  If TREATMENT OA35 equals 1, then 1st DEFORMATION EXTENT EV11
EH0012     should be greater than 03.
```

VEH NUM = 01 OCCUPANT NUM = 01

1992 NATIONAL ACCIDENT SAMPLING SYSTEM

ERROR SUMMARY SCREEN [redacted], 1992

CURRENT VERSION: 5.01

FORM NAME	NUMBER OF DOLLAR SIGNS	NUMBER OF LEVEL 1 ERRORS	NUMBER OF LEVEL 2 ERRORS	VERSION NUMBER CONSISTENT
Accident	0	0	0	Y
General Vehicle	0	0	1	Y
Vehicle Exterior	0	0	0	Y
Vehicle Interior	0	0	0	Y
Occupant Assessment	0	0	4	Y
Occupant Injury	0	0	0	Y
Total Inter Errors		0	1	
Total Case Errors	0	0	6	

```
HH0022      OA07 is questionable.  See Table A1.

HH0031  2   If OCCUPANT ROLE OA09 equals 1, then OCCUPANT AGE OA05 should
HH0032      not be less than 13.

HH1271  2   ******* THIS CASE SHOWS EJECTION WITH RESTRAINT USEAGE. ******
HH1272      ******  CHECK YOUR DATA AND IF CORRECT, NOTIFY YOUR ZONE ******
HH1273      EJECTION OA12 is equal to 1-3 and ((MANUAL BELT USE OA18 does
HH1274      not equal 00 or01) or (AIR BAG DEPLOYMENT OA22 does not equal
HH1275      0 or 4) or AUTOMATIC BELT USE OA45 does not equal 0 or 2)).

HH1281  2   ******** THIS VEHICLE IS INICATED AS HAVING AN AIRBAG. *****
HH1282      ****** CHECK YOUR DATA AND IF CORRECT, NOTIFY YOUR ZONE *******
HH1283      AIR BAG AVAILABILITY/FUNCTION OA21 equals 1-3.
```

INTER ERRORS

```
EH0011  2   If TREATMENT OA35 equals 1, then 1st DEFORMATION EXTENT EV11
EH0012      should be greater than 03. GV=01 OA=01
```

PSU48 ERROR SUMMARY SCREEN [redacted]93
CASE 122A
CURRENT VERSION: 5.04

FORM NAME	NUMBER OF DOLLAR SIGNS	NUMBER OF LEVEL 1 ERRORS	NUMBER OF LEVEL 2 ERRORS	VERSION NUMBER CONSISTENT
Accident	0	0	0	Y
General Vehicle	0	0	1	Y
Vehicle Exterior	0	0	0	Y
Vehicle Interior	0	0	0	Y
Occupant Assesment	0	0	4	Y
Occupant Interior	0	0	0	Y
Total Inter Errors		0	1	
Total Case Errors	0	0	6	

U.S. Department of Transportation
National Highway Traffic Safety Administration

SLIDE INDEX

NATIONAL ACCIDENT SAMPLING SYSTEM
CRASHWORTHINESS DATA SYSTEM

Primary Sampling Unit Number 4 8 Case Number—Stratum 1 2 2 A

Slide No.	Vehicle No.	Direction of Picture	Description of Slide Subject Matter
1-4	1	N	Path of travel of v1.
5-7	1	NW	V1 yaws off left side of roadway.
8	1	NW	Area of impact with embankment.
9-10	1	N	Path after impact.
11-12	1	N	Rollover area.
13	1	W	Final rest position.
14-16	1	S	Opposite views.
17-36	1		Exterior Views.
37-57	1		Interior Views.
58			V1

HS Form 434B (1/92)

Slide No.	Vehicle No.	Direction of Picture	Description of Slide Subject Matter

PSU 48-122A (1992) #1
Best Available

PSU 48-122A (1992) #2
Best Available

PSU 48-122A (1992) #3
Best Available

PSU 48-122A (1992) #4
Best Available

PSU 48-122A (1992) #5
Best Available

PSU 48-122A (1992) #6
Best Available

PSU 48-122A (1992) #7
Best Available

PSU 48-122A (1992) #8
Best Available

PSU 48-122A (1992) #9

Best Available

PSU 48-122A (1992) #10
Best Available

PSU 48-122A (1992) #11
Best Available

PSU 48-122A (1992) #12
Best Available

PSU 48-122A (1992) #13
Best Available

PSU 48-122A (1992) #14
Best Available

PSU 48-122A (1992) #15
Best Available

PSU 48-122A (1992) #16
Best Available

PSU 48-122A (1992) #17

PSU 48-122A (1992) #18

PSU 48-122A (1992) #19

PSU 48-122A (1992) #20

PSU 48-122A (1992) #21

PSU 48-122A (1992) #22

PSU 48-122A (1992) #23

PSU 48-122A (1992) #24

PSU 48-122A (1992) #25

PSU 48-122A (1992) #26

PSU 48-122A (1992) #27

PSU 48-122A (1992) #28

PSU 48-122A (1992) #29

PSU 48-122A (1992) #30

PSU 48-122A (1992) #31

PSU 48-122A (1992) #32

PSU 48-122A (1992) #33

PSU 48-122A (1992) #34

PSU 48-122A (1992) #35

PSU 48-122A (1992) #36

PSU 48-122A (1992) #37

PSU 48-122A (1992) #38

PSU 48-122A (1992) #39

PSU 48-122A (1992) #40

PSU 48-122A (1992) #41

PSU 48-122A (1992) #42

PSU 48-122A (1992) #43

PSU 48-122A (1992) #44

PSU 48-122A (1992) #45

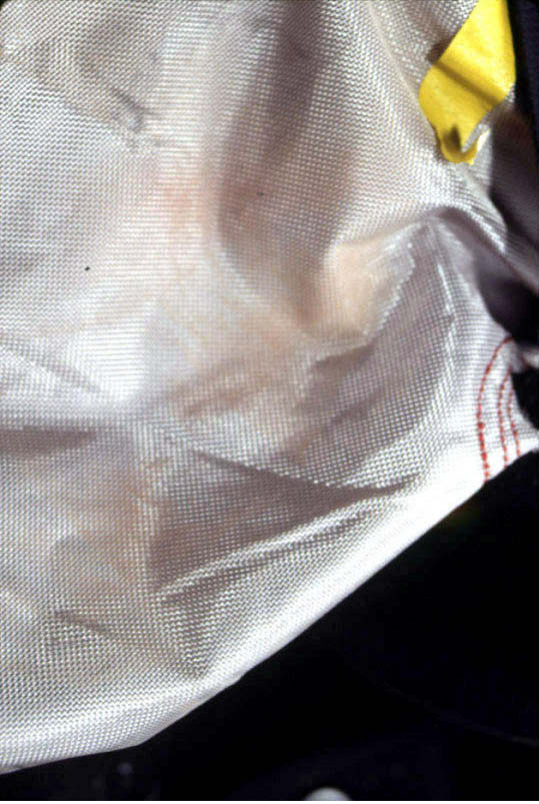

PSU 48-122A (1992) #46

PSU 48-122A (1992) #47

PSU 48-122A (1992) #48

PSU 48-122A (1992) #49

PSU 48-122A (1992) #50

PSU 48-122A (1992) #51

PSU 48-122A (1992) #52

PSU 48-122A (1992) #53

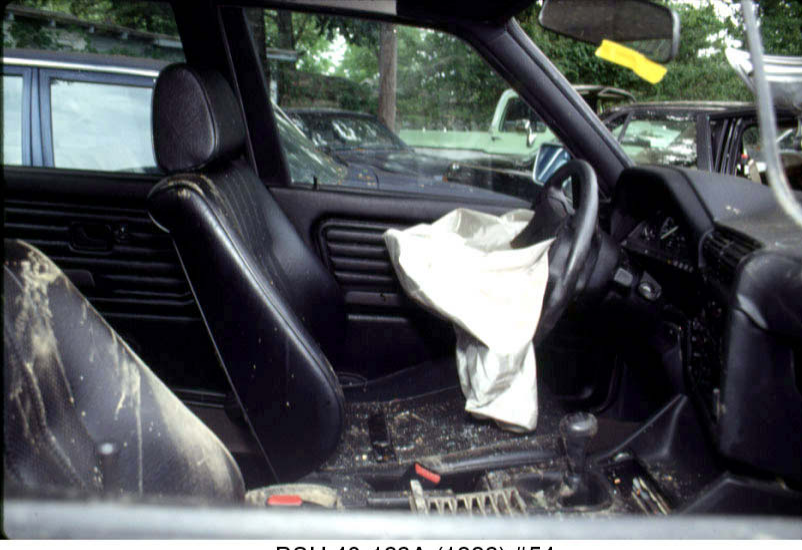

PSU 48-122A (1992) #54

PSU 48-122A (1992) #55

PSU 48-122A (1992) #56

PSU 48-122A (1992) #57

PSU 48-122A (1992) #58