U.S. Department
of Transportation

**National Highway
Traffic Safety
Administration**

400 Seventh Street, S.W.
Washington, D.C. 20590

Dear Crash Data Researchers/Users:

Thank you for choosing crash data from the National Highway Traffic Safety Administration (NHTSA) for your research or other use. The information contained in this motor vehicle crash report is collected, maintained and distributed in accordance with Public Law 89-564. In accordance with this Public Law, NHTSA is required not to release any case information until completion of quality control procedures. These procedures include a review of the case material to extract all names, licenses and registration numbers, non-coded interview material, non-research related researcher comments in the margins, non-factual data, and the production number portion of the vehicle identification number (VIN).

If you requested NHTSA to query its database files in order to identify a specific crash, then that query was made using non-personal descriptors you provided for use in our search. This motor vehicle crash may have been identified from a data search and matches the general, non-personal descriptors you provided, but we cannot confirm that this is the specific crash report you requested.

If you have any questions with regard to the above procedures, please contact the Field Operations Branch, Crash Investigation Division, National Center for Statistics and Analysis at 202-366-4820. Again, please be advised that we cannot confirm that this is the case that you have specifically requested nor can we certify the information to be correct.

*** *** ***

Get it together!
SAFETY BELTS SAVE LIVES

AUTO SAFETY HOTLINE
(800) 424-9393
Wash. D.C. Area 366-0123

U.S. Department of Transportation
National Highway Traffic Safety Administration

CASE SUMMARY

NATIONAL ACCIDENT SAMPLING SYSTEM
CRASHWORTHINESS DATA SYSTEM

PSU 49 **CASE NO.** 129A **TYPE OF ACCIDENT** CAR/CAR - Multiple Impacts.

A. DESCRIPTION OF THE ACCIDENT SEQUENCE AND ACCIDENT PECULIARITIES

(Provide a summary of the accident sequence as well as any particular event of the accident that is noteworthy. Injury mechanism and vehicle crashworthiness is the focus, not driver culpability. Do not include any personal identifiers. Use reverse side if needed.)

V1 was traveling west and in the left lane of a two lane bridge under construction. The front of V1 impacted a temporary barricade on the left side of the road. V1 then served to the right side of the road where V2 was traveling East. It is unknown if V1 and V2 impacted. V2 Swerved to the right and went through a gaurd rail and flipped over into a lake. Both vehicles were towed. The driver of V1 was not injured. The driver of V2 was killed.

B. VEHICLE PROFILE(S)

Vehicle No.	Class of Vehicle	Year/Make/Model	Most Severe Damage		Component Failure
			Damage Plane	Severity Description	
01	Intermediate	1980/Pontiac/Grand Prix	Front	Severe	Driver's Door.
02	Full Size	1991/Cadillac/ Deville	Unknown	Unknown	Unknown

C. PERSON PROFILE(S)

Vehicle No.	Person Role	Seat Position	Restraint Use	Most Severe Injury			
				Body Region	Lesion	AIS	Injury Source
01	Driver	Front Left	Lap & Shld.	None	None	None	None
02	Driver	Front Left	Unknown	~~UNk.~~ C-Spine	~~UNk.~~ Fracture C_5-C_6	~~Unk.~~ 2	Unk.

DO NOT SANITIZE THIS FORM

HS Form 434A (1/92)

U.S. Department of Transportation
National Highway Traffic Safety Administration

NATIONAL ACCIDENT SAMPLING SYSTEM
CRASHWORTHINESS DATA SYSTEM

ACCIDENT COLLISION DIAGRAM

PSU No. 4 9
Case Number—Stratum 1 2 9 A

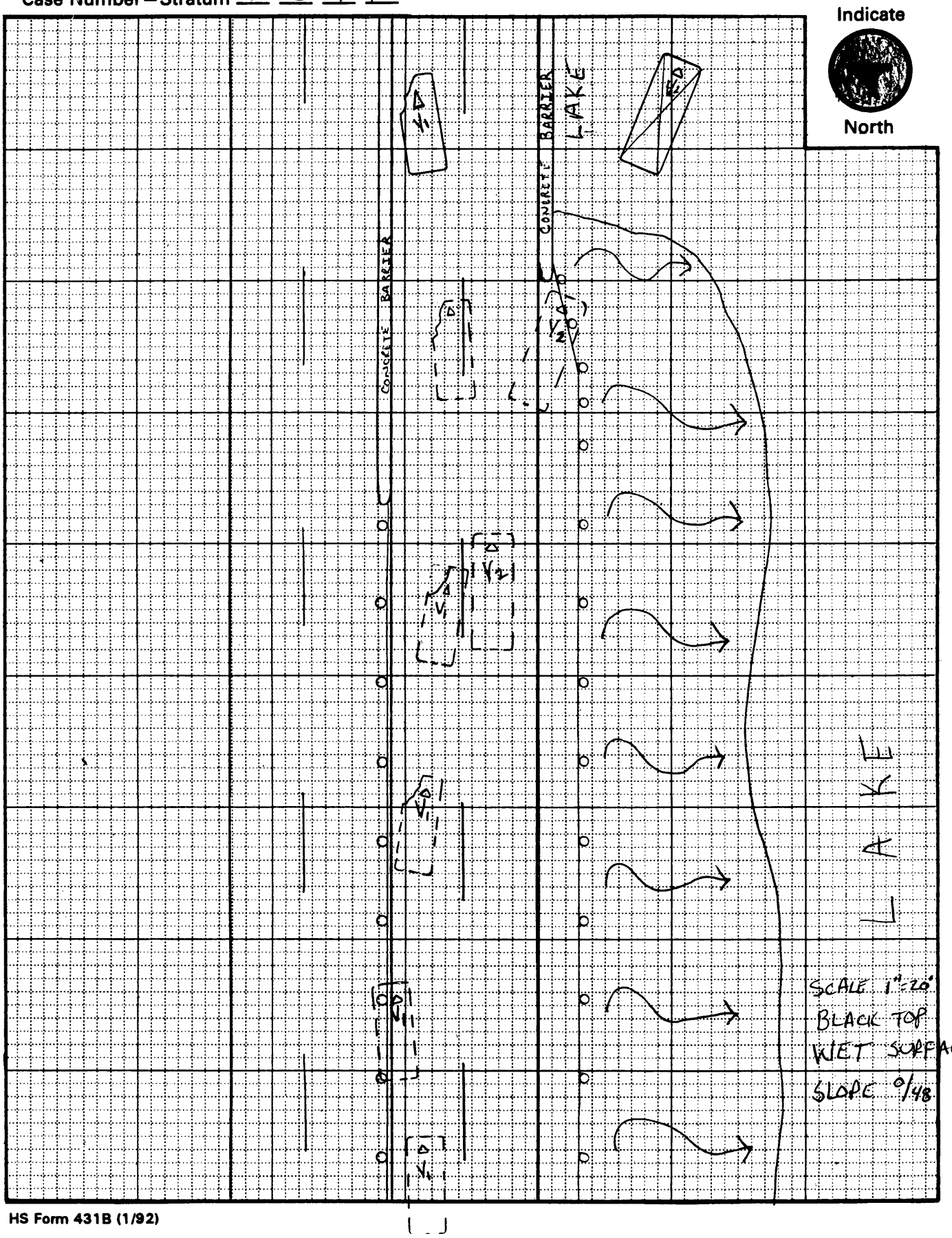

HS Form 431B (1/92)

U.S. Department of Transportation
National Highway Traffic Safety Administration

ACCIDENT COLLISION MEASUREMENT TABLE

NATIONAL ACCIDENT SAMPLING SYSTEM
CRASHWORTHINESS DATA SYSTEM

Primary Sampling Unit Number 4 9 Case Number – Stratum 1 2 9 A

ACCIDENT COLLISION DIAGRAM

LEVEL I
PHYSICAL EVIDENCE ABSENT

To be accomplished when there is no physical evidence present at the scene:

- approximate vehicle orientation at impact and final rest
- applicable road/roadway delineation (e.g., curbs/edge lines, lane markings, median markings, pavement markings, etc.)
- applicable traffic controls (e.g., speed limit)
- north arrow placed on diagram
- sketch required

LEVEL II
PHYSICAL EVIDENCE PRESENT

In addition to the level I tasks noted above, the following must be accomplished when physical evidence is present:

- document reference point and reference line relative to physical features present at the scene
- scale documentation of all accident induced physical evidence
- scaled documentation of all roadside objects contacted
- roadway surface type and condition of applicable roadways
- grade measurements for all applicable roadways and at location of rollover initiation
- scaled representations of the vehicle(s) at pre-impact, impact, and final rest based upon either:
  - a) physical evidence, or
  - b) reconstructed accident dynamics

CRASH DATA

	VEH. #1	VEH. #2	VEH. #3
Heading Angle	70°	70°	
Surface Type	BLACK TOP		
Surface Condition	WET	WET	
Grade (v/h) Measurement (between impact and final rest)	0°	0°	
Grade (v/h) Measurement (at location of rollover initiation)			

Reference Point: AREA UNDER CONSTRUCTION and SCENE has Been Altered Reference line:

Item	Distance and Direction from Reference Point	Distance and Direction from Reference Line

HS Form 431A (1/92)

Item	Distance and Direction from Reference Point	Distance and Direction from Reference Line

U.S. Department of Transportation
National Highway Traffic Safety Administration

ACCIDENT FORM

NATIONAL ACCIDENT SAMPLING SYSTEM
CRASHWORTHINESS DATA SYSTEM

1. Primary Sampling Unit Number 4 9
2. Case Number - Stratum 1 2 9 A

IDENTIFICATION

3. Number of General Vehicle Forms Submitted Ø 2
4. Date of Accident (Month,Day,Year) [redacted] / [redacted] / 9 2
5. Time of Accident 1 9 2 5

Code reported military time of accident.

NOTE: Midnight = 2400
Unknown = 9999

SPECIAL STUDIES - INDICATORS

Check (✓) each special study (SS12-SS16 below) that has been completed; code 1 for the checked special studies and 0 for the special studies not checked.

6. ___ SS12 Not Active 0
7. ___ SS13 Not Active 0
8. ___ SS14 Fatal AOPS Ø
9. ___ SS15 _____ Ø
10. ___ SS16 _____ Ø

NUMBER OF EVENTS

11. Number of Recorded Events in This Accident Ø 4

Code the number of events which occurred in this accident.

ACCIDENT EVENTS

For each event that occurred in the accident, code the lowest numbered vehicle in the left columns and the other involved vehicle or object on the right.

Accident Event Sequence Number	Vehicle Number	Class Of Vehicle	General Area of Damage	Vehicle Number or Object Contacted	Class Of Vehicle	General Area of Damage
12. 0 1	13. Ø 1	14. Ø 3	15. F	16. 5 6	17. Ø Ø	18. Ø
19. 0 2	20. Ø 1	21. Ø 3	22. 9	23. Ø 2	24. Ø 4	25. 9
26. 0 3	27. Ø 2	28. Ø 4	29. F	30. 5 6	31. Ø Ø	32. Ø
33. 0 4	34. Ø 2	35. Ø 4	36. 9	37. 3 1	38. Ø Ø	39. N
40. 0 5	41. ___	42. ___	43. ___	44. ___	45. ___	46. ___

IF GREATER THAN FIVE EVENTS, CONTINUE CODING ON THE ACCIDENT EVENT SUPPLEMENT

CODES FOR CLASS OF VEHICLE

(00) Not a motor vehicle
(01) Subcompact/mini (wheelbase < 100 inches)
(02) Compact (wheelbase = 100 — 104 inches)
(03) Intermediate (wheelbase = 105 — 109 inches)
(04) Full size (wheelbase = 110 — 114 inches)
(05) Largest (wheelbase ≥ 115 inches)
(09) Unknown passenger car size
(11) Compact utility vehicle
(12) Large utility vehicle (≤ 10,000 lbs GVWR)
(13) Passenger van (≤ 10,000 lbs GVWR)
(14) Other van (≤ 10,000 lbs GVWR)
(15) Pickup truck (≤ 10,000 lbs GVWR)
(18) Other truck (≤ 10,000 lbs GVWR)
(19) Unknown light truck type
(20) School bus
(21) Other bus
(22) Truck (> 10,000 lbs GVWR)
(23) Tractor without trailer
(24) Tractor-trailer(s)
(25) Motored cycle
(28) Other vehicle
(99) Unknown

CODES FOR GENERAL AREA OF DAMAGE (GAD)

CDS APPLICABLE AND OTHER VEHICLES

(0) Not a motor vehicle
(N) Noncollision
(F) Front
(R) Right side
(L) Left side
(B) Back
(T) Top
(U) Undercarriage
(9) Unknown

TDC APPLICABLE VEHICLES

(0) Not a motor vehicle
(N) Noncollision
(F) Front
(R) Right side
(L) Left side
(B) Back of unit with cargo area (rear of trailer or straight truck)
(D) Back (rear of tractor)
(C) Rear of cab
(V) Front of cargo area
(T) Top
(U) Undercarriage
(9) Unknown

CODES FOR VEHICLE NUMBER OR OBJECT CONTACTED

(01-30) — Vehicle Number

Noncollision
(31) Overturn — rollover
(32) Fire or explosion
(33) Jackknife
(34) Other intraunit damage (specify): _____
(35) Noncollision injury
(38) Other noncollision (specify): _____
(39) Noncollision — details unknown

Collision With Fixed Object
(41) Tree (≤ 4 inches in diameter)
(42) Tree (> 4 inches in diameter)
(43) Shrubbery or bush
(44) Embankment
(45) Breakaway pole or post (any diameter)

Nonbreakaway Pole or Post
(50) Pole or post (≤ 4 inches in diameter)
(51) Pole or post (> 4 inches but ≤ 12 inches in diameter)
(52) Pole or post (> 12 inches in diameter)
(53) Pole or post (diameter unknown)
(54) Concrete traffic barrier
(55) Impact attenuator
(56) Other traffic barrier (includes guardrail) (specify): TEMPORARY GUARD RAIL / GUARDRAIL
(57) Fence
(58) Wall
(59) Building
(60) Ditch or culvert
(61) Ground
(62) Fire hydrant
(63) Curb
(64) Bridge
(68) Other fixed object (specify): _____
(69) Unknown fixed object

Collision with Nonfixed Object
(71) Motor vehicle not in-transport
(72) Pedestrian
(73) Cyclist or cycle
(74) Other nonmotorist or conveyance
(75) Vehicle occupant
(76) Animal
(77) Train
(78) Trailer, disconnected in transport
(88) Other nonfixed object (specify): _____
(89) Unknown nonfixed object

(98) Other event (specify): _____
(99) Unknown event or object

OCCUPANT RELATED

16. Driver Presence in Vehicle 1
    (0) Driver not present
    (1) Driver present
    (9) Unknown

17. Number of Occupants This Vehicle Ø 1
    (00-96) Code actual number of occupants for this vehicle
    (97) 97 or more
    (99) Unknown

18. Number of Occupant Forms Submitted Ø 1

VEHICLE WEIGHT ITEMS

19. Vehicle Curb Weight Ø 3,200
    3,247 Code weight to nearest 100 pounds.
    (010) Less than 1050 pounds
    (135) 13,500 pounds or more
    (999) Unknown

    Source: [redacted]

20. Vehicle Cargo Weight 9,900
    ____ Code weight to nearest 100 pounds.
    (00) Less than 50 pounds
    (97) 9,650 pounds or more
    (99) Unknown

RECONSTRUCTION DATA

21. Towed Trailing Unit Ø
    (0) No towed unit
    (1) Yes—towed trailing unit
    (9) Unknown

22. Documentation of Trajectory Data for This Vehicle Ø
    (0) No
    (1) Yes

23. Post Collision Condition of Tree or Pole (For Highest Delta V) Ø
    (0) Not collision (for highest delta V) with tree or pole
    (1) Not damaged
    (2) Cracked/sheared
    (3) Tilted <45 degrees
    (4) Tilted ≥45 degrees
    (5) Uprooted tree
    (6) Separated pole from base
    (7) Pole replaced
    (8) Other (specify): _____
    (9) Unknown

24. Rollover Ø
    (0) No rollover (no overturning)

    Rollover (primarily about the longitudinal axis)
    (1) Rollover, 1 quarter turn only
    (2) Rollover, 2 quarter turns
    (3) Rollover, 3 quarter turns
    (4) Rollover, 4 or more quarter turns (specify): _____

    (5) Rollover--end-over-end (i.e., primarily about the lateral axis)
    (9) Rollover (overturn), details unknown

OVERRIDE/UNDERRIDE (THIS VEHICLE)

25. Front Override/Underride (this Vehicle) Ø

26. Rear Override/Underride (this Vehicle) Ø

    (0) No override/underride, or not an end-to-end impact

    Override (see specific CDC)
    (1) 1st CDC
    (2) 2nd CDC
    (3) Other not automated CDC (specify): _____

    Underride (see specific CDC)
    (4) 1st CDC
    (5) 2nd CDC
    (6) Other not automated CDC (specify): _____

    (7) Medium/heavy truck or bus override
    (9) Unknown

HEADING ANGLE AT IMPACT FOR HIGHEST DELTA V

Values: (000)-(359) Code actual value
(997) Noncollision
(998) Impact with object
(999) Unknown

27. Heading Angle For This Vehicle 998

28. Heading Angle For Other Vehicle 998

49-129A
V-01

Category	Configuration	ACCIDENT TYPES (Includes Intent)
I. Single Driver	A. Right Roadside Departure	01 DRIVE OFF ROAD; 02 CONTROL/ TRACTION LOSS; 03 AVOID COLLISION WITH VEH., PED., ANIM.; 04 SPECIFICS OTHER; 05 SPECIFICS UNKNOWN
	B. Left Roadside Departure	06 DRIVE OFF ROAD; 07 CONTROL/ TRACTION LOSS; 08 AVOID COLLISION WITH VEH., PED., ANIM.; 09 SPECIFICS OTHER; 10 SPECIFICS UNKNOWN
	C. Forward Impact	11 PARKED VEH.; 12 STA. OBJECT; 13 PEDESTRIAN/ ANIMAL; 14 END DEPARTURE; 15 SPECIFICS OTHER; 16 SPECIFICS UNKNOWN
II Same Trafficway Same Direction	D. Rear-End	20, 21, 22, 23 STOPPED; 24, 25, 26, 27 SLOWER; 28, 29, 30, 31 DECEL.; (EACH • 32) SPECIFICS OTHER; (EACH • 33) SPECIFICS UNKNOWN
	E. Forward Impact	34, 35 CONTROL/ TRACTION LOSS; 36, 37 CONTROL/ TRACTION LOSS; 38, 39 AVOID COLLISION WITH VEH.; 40, 41 AVOID COLLISION WITH OBJECT; (EACH • 42) SPECIFICS OTHER; (EACH • 43) SPECIFICS UNKNOWN
	F. Sideswipe Angle	44, 45, 46, 47; (EACH • 48) SPECIFICS OTHER; (EACH • 49) SPECIFICS UNKNOWN
III Same Trafficway Opposite Direction	G. Head-On	50, 51 LATERAL MOVE; (EACH • 52) SPECIFICS OTHER; (EACH • 53) SPECIFICS UNKNOWN
	H. Forward Impact	54, 55 CONTROL/ TRACTION LOSS; 56, 57 CONTROL/ TRACTION LOSS; 58, 59 AVOID COLLISION WITH VEH.; 60, 61 AVOID COLLISION WITH OBJECT; (EACH • 62) SPECIFICS OTHER; (EACH • 63) SPECIFICS UNKNOWN
	I. Sideswipe Angle	64, 65 LATERAL MOVE; (EACH • 66) SPECIFICS OTHER; (EACH • 67) SPECIFICS UNKNOWN
IV. Change Trafficway Vehicle Turning	J. Turn Across Path	68, 69 INITIAL OPPOSITE DIRECTIONS; 70, 71 INITIAL SAME DIRECTIONS; 72, 73; (EACH • 74) SPECIFICS OTHER; (EACH • 75) SPECIFICS UNKNOWN
	K. Turn Into Path	76, 77, 78, 79 TURN INTO SAME DIRECTION; 80, 81, 82, 83 TURN INTO OPPOSITE DIRECTIONS; (EACH • 84) SPECIFICS OTHER; (EACH • 85) SPECIFICS UNKNOWN
V. Intersecting Paths (Vehicle Damage)	L. Straight Paths	86, 87, 88, 89; (EACH • 90) SPECIFICS OTHER; (EACH • 91) SPECIFICS UNKNOWN
VI. Miscellaneous	M. Backing Etc.	92 BACKING VEH.; 93 OTHER VEH. OR OBJECT; 98 Other Accident Type; 99 Unknown Accident Type; 00 No Impact

OTHER DATA

56. Driver's Zip Code [redacted]

(00000) Driver not present
(00001) Driver not a resident of U.S. or territories
_____ Code actual 5-digit zip code
(99999) Unknown

57. Driver's Race/Ethnic Origin 9
(0) Driver not present
(1) White (non-Hispanic)
(2) Black (non-Hispanic)
(3) White (Hispanic)
(4) Black (Hispanic)
(5) American Indian, Eskimo or Aleut
(6) Asian or Pacific Islander
(8) Other (specify): _____
(9) Unknown

58. Vehicle Special Use (This Trip) Ø
(0) No special use
(1) Taxi
(2) Vehicle used as school bus
(3) Vehicle used as other bus
(4) Military
(5) Police
(6) Ambulance
(7) Hearse
(8) Fire truck or car
(9) Unknown

ROLLOVER DATA

If GV07 (Body Type) ≠ 1-49, leave GV59-GV63 blank.
If GV24 (Rollover) = 0, then GV59-GV63 must equal 0.
If GV24 = 9, then GV59-GV63 must equal 9.

59. Rollover Initiation Type Ø
(0) No rollover
(1) Trip-over
(2) Flip-over
(3) Turn-over
(4) Climb-over
(5) Fall-over
(6) Bounce-over
(7) Collision with another vehicle
(8) Other rollover initiation type specify): _____
(9) Unknown rollover initiation type

60. Location of Rollover Initiation Ø
(0) No rollover
(1) On roadway
(2) On shoulder—paved
(3) On shoulder—unpaved
(4) On roadside or divided trafficway median
(9) Unknown

61. Rollover Initiation Object Contacted Ø Ø

62. Location on Vehicle Where Initial Principal Tripping Force Is Applied Ø
(0) No rollover
(1) Wheels/tires
(2) Side plane
(3) End plane
(4) Undercarriage
(5) Other location on vehicle (specify): _____
(8) Non-contact rollover forces (specify): _____
(9) Unknown

63. Direction of Initial Roll Ø
(0) No rollover
(1) Roll right - primarily about the longitudinal axis
(2) Roll left - primarily about the longitudinal axis
(5) End-over-end (i.e., primarily about the lateral axis)
(9) Unknown roll direction

PRECRASH DATA

64. Pre-Event Movement (Prior to Recognition of Critical Event) Ø 1
(01) Going straight
(02) Slowing or stopping in traffic lane
(03) Starting in traffic lane
(04) Stopped in traffic lane
(05) Passing or overtaking another vehicle
(06) Disabled or parked in travel lane
(07) Leaving a parking position
(08) Entering a parking position
(09) Turning right
(10) Turning left
(11) Making a U-turn
(12) Backing up (other than for parking position)
(13) Negotiating a curve
(14) Changing lanes
(15) Merging
(16) Successful avoidance maneuver to a previous critical event
(97) Other (specify): _____
(98) No driver present
(99) Unknown

49-129A
V-01

CODES FOR ROLLOVER INITIATION OBJECT CONTACTED

(00) No rollover
(01-30) — Vehicle Number

Noncollision
(31) Turn-over — fall-over
(33) Jackknife

Collision With Fixed Object
(41) Tree (≤ 4 inches in diameter)
(42) Tree (> 4 inches in diameter)
(43) Shrubbery or bush
(44) Embankment

(45) Breakaway pole or post (any diameter)

Nonbreakaway Pole or Post
(50) Pole or post (≤ 4 inches in diameter)
(51) Pole or post (> 4 inches but ≤ 12 inches in diameter)
(52) Pole or post (> 12 inches in diameter)
(53) Pole or post (diameter unknown)

(54) Concrete traffic barrier
(55) Impact attenuator
(56) Other traffic barrier (includes guardrail) (specify):_____

(57) Fence
(58) Wall
(59) Building
(60) Ditch or culvert
(61) Ground
(62) Fire hydrant
(63) Curb
(64) Bridge
(68) Other fixed object (specify):
_____
(69) Unknown fixed object

Collision with Nonfixed Object
(71) Motor vehicle not in-transport
(76) Animal
(77) Train
(78) Trailer, disconnected in transport
(88) Other nonfixed object (specify):
_____
(89) Unknown nonfixed object

(98) Other event (specify):
_____
(99) Unknown event or object

U.S. Department of Transportation
National Highway Traffic Safety Administration

EXTERIOR VEHICLE FORM

NATIONAL ACCIDENT SAMPLING SYSTEM
CRASHWORTHINESS DATA SYSTEM

1. Primary Sampling Unit Number: 4 9
2. Case Number - Stratum: 1 2 9 A
3. Vehicle Number: Ø 1

VEHICLE IDENTIFICATION

VIN 2 J 3 7 A A 2 [redacted] Model Year 8 0

Vehicle Make (specify): PONTIAC Vehicle Model (specify): GRAND PRIX

LOCATOR

Locate the end of the damage with respect to the vehicle longitudinal center line or bumper corner for end impacts or an undamaged axle for side impacts.

Specific Impact No.	Location of Direct Damage	Location of Field L
Ø 1	Begins left FRNT Bumper CORNER	ENTIRE FRONT BUMPER

CRUSH PROFILE

NOTES: Identify the plane at which the C-measurements are taken (e.g., at bumper, above bumper, at sill, above sill, etc.) and label adjustments (e.g., free space).

Measure and document on the vehicle diagram the location of maximum crush.

Measure C1 to C6 from driver to passenger side in front or rear impacts and rear to front in side impacts.

11.4

Free space value is defined as the distance between the baseline and the original body contour taken at the individual C locations. This may include the following: bumper lead, bumper taper, side protrusion, side taper, etc. Record the value for each C-measurement and maximum crush.

Use as many lines/columns as necessary to describe each damage profile.

Specific Impact Number	Plane of Impact C-Measurements	Direct Damage Width (CDC)	Direct Damage Max Crush	Field L	C_1	C_2	C_3	C_4	C_5	C_6	D
Ø 1	BUMPER	40"	C_1	57"	36.5	26.8	17.5	15.4	11.4	7.6	12"
					3.5	1.5	.5	.5	1.5	3.5	0
Ø 1	TOTAL	40"	C_1	57"	33.0	25.3	17.0	14.9	9.9	4.1	-12"

HS Form 435A (Rev. 1/92)

49-129A

VEHICLE DAMAGE SKETCH

TIRE – WHEEL DAMAGE

a. Rotation physically restricted		b. Tire deflated	
RF	2	RF	2
LF	1	LF	1
RR	2	RR	2
LR	2	LR	2

(1) Yes (2) No (8) NA (9) Unk.

TYPE OF TRANSMISSION

☐ Manual ☐ Automatic

ORIGINAL SPECIFICATIONS

Wheelbase	106.1
Overall Length	201.4
Maximum Width	72.7
Curb Weight	3247
Average Track	58.1
Front Overhang	43.2
Rear Overhang	49.7
Engine Size: cyl./ displ.	6/231 cu in
Undeformed End Width	64"

WHEEL STEER ANGLES
(For locked front wheels or displaced rear axles only)

RF ± ___ °
LF ± 30 °
RR ± ___ °
LR ± ___ °
Within ±5 degrees

DRIVE WHEELS

☐ FWD ☒ RWD ☐ 4WD

Approximate Cargo Weight 20 lbs clothes

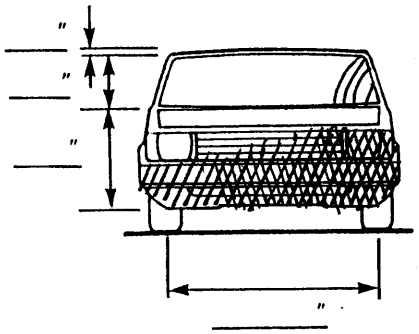

Original Bumper height 14

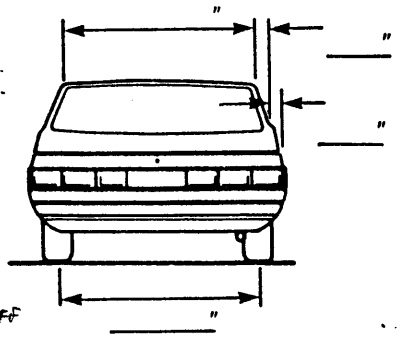

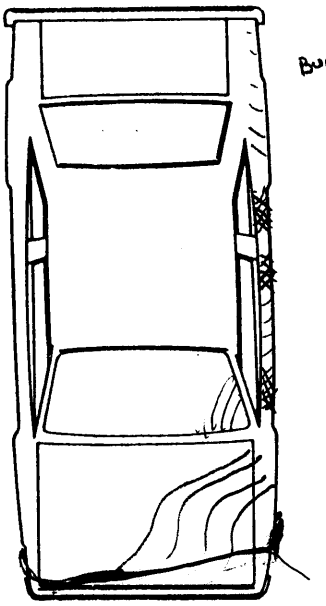

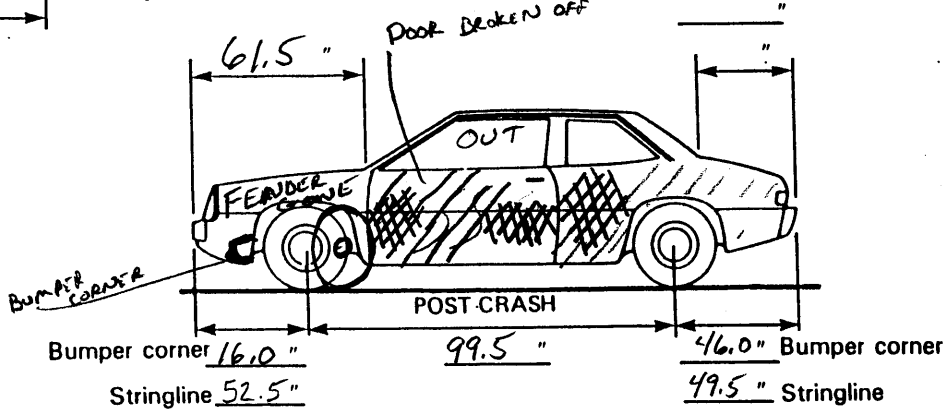

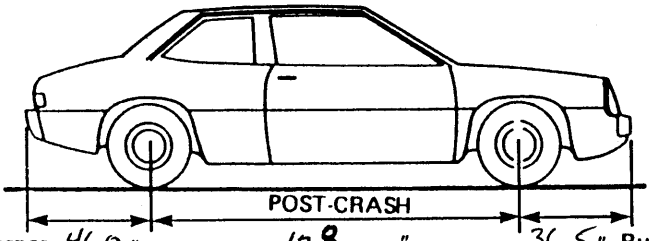

NOTES: Sketch new perimeter and cross hatch direct damage and single hatch induced damage on all views. Annotate observations which might be useful in reconstructing the accident (e.g., grass in tire bead, direction of striations, scuff on sidewall, etc.). If pulling trailer, sketch type of trailer and damage received on the back of this page.
Annotate any damage caused by extrication such as component removal by torching, prying, or hydraulic shears.

CDC WORKSHEET

CODES FOR OBJECT CONTACTED

(01-30) — Vehicle Number

Noncollision
- (31) Overturn — rollover
- (32) Fire or explosion
- (33) Jackknife
- (34) Other intraunit damage (specify): _____
- (35) Noncollision injury
- (38) Other noncollision (specify): _____
- (39) Noncollision — details unknown

Collision With Fixed Object
- (41) Tree (≤ 4 inches in diameter)
- (42) Tree (> 4 inches in diameter)
- (43) Shrubbery or bush
- (44) Embankment
- (45) Breakaway pole or post (any diameter)

Nonbreakaway Pole or Post
- (50) Pole or post (≤ 4 inches in diameter)
- (51) Pole or post (> 4 inches but ≤ 12 inches in diameter)
- (52) Pole or post (> 12 inches in diameter)
- (53) Pole or post (diameter unknown)
- (54) Concrete traffic barrier
- (55) Impact attenuator
- (56) Other traffic barrier (includes guardrail) (specify): TEMPORARY GUARD RAIL
- (57) Fence
- (58) Wall
- (59) Building
- (60) Ditch or culvert
- (61) Ground
- (62) Fire hydrant
- (63) Curb
- (64) Bridge
- (68) Other fixed object (specify): _____
- (69) Unknown fixed object

Collision with Nonfixed Object
- (71) Motor vehicle not in-transport
- (72) Pedestrian
- (73) Cyclist or cycle
- (74) Other nonmotorist or conveyance _____
- (75) Vehicle occupant
- (76) Animal
- (77) Train
- (78) Trailer, disconnected in transport
- (88) Other nonfixed object (specify): _____
- (89) Unknown nonfixed object
- (98) Other event (specify): _____
- (99) Unknown event or object

10.3

DEFORMATION CLASSIFICATION BY EVENT NUMBER 5, 10.3 / 61.5

Accident Event Sequence Number	Object Contacted	(1) (2) Direction of Force (degrees)	Incremental Value of Shift	(3) Deformation Location	(4) Specific Longitudinal or Lateral Location	(5) Specific Vertical or Lateral Location	(6) Type of Damage Distribution	(7) Deformation Extent
01	56	000	00	F	Y	E	W	04
02	01	999	00	9	9	9	9	99

U.S. Department of Transportation
National Highway Traffic Safety Administration

INTERIOR VEHICLE FORM

NATIONAL ACCIDENT SAMPLING SYSTEM
CRASHWORTHINESS DATA SYSTEM

1. Primary Sampling Unit Number 4 9
2. Case Number - Stratum 1 2 9 A
3. Vehicle Number Ø 1

INTEGRITY

4. Passenger Compartment Integrity 1 3

(00) No integrity loss

Yes, Integrity Was Lost Through
(01) Windshield
(02) Door (side)
(03) Door/hatch (back door)
(04) Roof
(05) Roof glass
(06) Side window
(07) Rear window (backlight)
(08) Roof and roof glass
(09) Windshield and door (side)
(10) Windshield and roof
(11) Side and rear window (side window and backlight)
(12) Windshield and side window
(13) Door and side window
(98) Other combination of above (specify): _____
(99) Unknown

Door, Tailgate or Hatch Opening

5. LF 2 6. RF 1 7. LR Ø 8. RR Ø 9. TG/H Ø

(0) No door/gate/hatch
(1) Door/gate/hatch remained closed and operational
(2) Door/gate/hatch came open during collision
(3) Door/gate/hatch jammed shut
(8) Other (specify): _____
(9) Unknown

Damage/Failure Associated with Door, Tailgate or Hatch Opening in Collision. If IV05-IV09 ≠ 2, Then code Ø

10. LF 6 11. RF Ø 12. LR Ø 13. RR Ø 14. TG/H Ø

(0) No door/gate/hatch or door not opened

Door, Tailgate or Hatch Came Open During Collision
(1) Door operational (no damage)
(2) Latch/striker failure due to damage
(3) Hinge failure due to damage
(4) Door structure failure due to damage
(5) Door support (i.e., pillar, sill, roof side rail, etc.) failure due to damage
(6) Latch/striker and hinge failure due to damage
(8) Other failure (specify): _____
(9) Unknown

GLAZING

Glazing Damage from Impact Forces

15. WS 2 16. LF 6 17. RF Ø 18. LR Ø 19. RR Ø
20. BL Ø 21. Roof Ø 22. Other 8

(0) No glazing damage from impact forces
(2) Glazing in place and cracked from impact forces
(3) Glazing in place and holed from impact forces
(4) Glazing out-of-place (cracked or not) and not holed from impact forces
(5) Glazing out-of-place and holed from impact forces
(6) Glazing disintegrated from impact forces
(7) Glazing removed prior to accident
(8) No glazing
(9) Unknown if damaged

Glazing Damage from Occupant Contact

23. WS Ø 24. LF Ø 25. RF Ø 26. LR Ø 27. RR Ø
28. BL Ø 29. Roof Ø 30. Other Ø

(0) No occupant contact to glazing or no glazing
(1) Glazing contacted by occupant but no glazing damage
(2) Glazing in place and cracked by occupant contact
(3) Glazing in place and holed by occupant contact
(4) Glazing out-of-place (cracked or not) by occupant contact and not holed by occupant contact
(5) Glazing out-of-place by occupant contact and holed by occupant contact
(6) Glazing disintegrated by occupant contact
(9) Unknown if contacted by occupant

If No Glazing Damage *And* No Occupant Contact or No Glazing, Then Code IV31 Through IV46 As Ø

Type of Window/Windshield Glazing

31. WS 1 32. LF 2 33. RF Ø 34. LR Ø 35. RR Ø
36. BL Ø 37. Roof Ø 38. Other Ø

(0) No glazing contact and no damage, or no glazing
(1) AS-1 — Laminated
(2) AS-2 — Tempered
(3) AS-3 — Tempered-tinted
(4) AS-14 — Glass/Plastic
(8) Other (specify): _____
(9) Unknown

Window Precrash Glazing Status

39. WS 1 40. LF 3 41. RF Ø 42. LR Ø 43. RR Ø
44. BL Ø 45. Roof Ø 46. Other Ø

(0) No glazing contact and no damage, or no glazing
(1) Fixed
(2) Closed
(3) Partially opened
(4) Fully opened
(9) Unknown

INTRUSION WORKSHEET

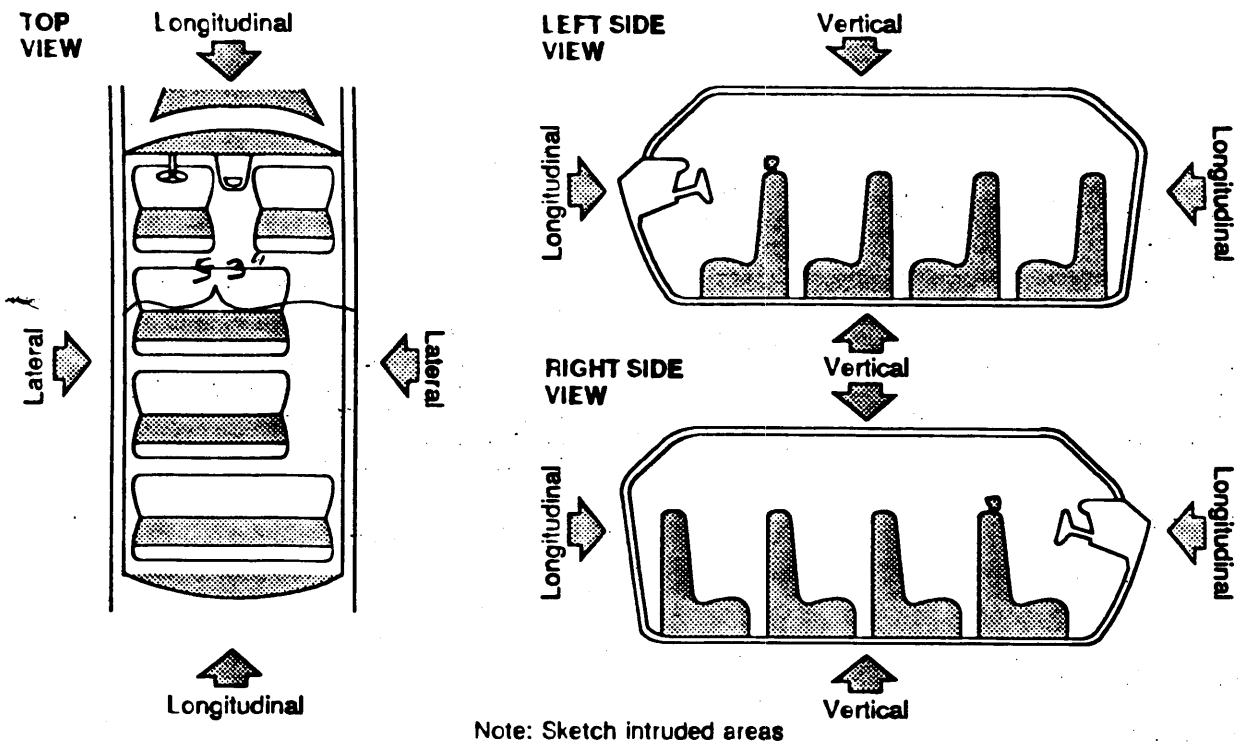

Note: Sketch intruded areas

LOCATION OF INTRUSION	INTRUDED COMPONENT	COMPARISON VALUE	–	INTRUDED VALUE	=	INTRUSION	DOMINANT CRUSH DIRECTION
11	INSTRUMENT PANEL	45	–	43.8	=	1.2	LONG
21	SIDE PANEL	26.5	–	15.8	=	9.7	LAT
21	B - PILLAR	26.5	–	20.0	=	6.5	LAT
21	SILL	25.5	–	25.5	=	0	LAT
			–		=		
			–		=		
			–		=		
			–		=		
			–		=		
			–		=		
			–		=		
			–		=		
			–		=		
			–		=		
			–		=		
			–		=		

Document no more than the 15 most severe intrusions

OCCUPANT AREA INTRUSION

Note: If no intrusions, leave variables IV47-IV86 blank.

	Location of Intrusion	Intruding Component	Magnitude of Intrusion	Dominant Crush Direction
1st	47. 2 1	48. 2 8	49. 3	50. 3
2nd	51. 2 1	52. Ø 7	53. 3	54. 3
3rd	55. 1 1	56. Ø 2	57. 1	58. 2
4th	59. ___ ___	60. ___ ___	61. ___	62. ___
5th	63. ___ ___	64. ___ ___	65. ___	66. ___
6th	67. ___ ___	68. ___ ___	69. ___	70. ___
7th	71. ___ ___	72. ___ ___	73. ___	74. ___
8th	75. ___ ___	76. ___ ___	77. ___	78. ___
9th	79. ___ ___	80. ___ ___	81. ___	82. ___
10th	83. ___ ___	84. ___ ___	85. ___	86. ___

LOCATION OF INTRUSION

Front Seat
- (11) Left
- (12) Middle
- (13) Right

Second Seat
- (21) Left
- (22) Middle
- (23) Right

Third Seat
- (31) Left
- (32) Middle
- (33) Right

Fourth Seat
- (41) Left
- (42) Middle
- (43) Right

- (97) Catastrophic
- (98) Other enclosed area (specify) _____
- (99) Unknown

INTRUDING COMPONENT

Interior Components
- (01) Steering assembly
- (02) Instrument panel left
- (03) Instrument panel center
- (04) Instrument panel right
- (05) Toe pan
- (06) A-pillar
- (07) B-pillar
- (08) C-pillar
- (09) D-pillar
- (10) Door panel (side)
- (12) Roof (or convertible top)
- (13) Roof side rail
- (14) Windshield
- (15) Windshield header
- (16) Window frame
- (17) Floor pan (includes sill)
- (18) Backlight header
- (19) Front seat back
- (20) Second seat back
- (21) Third seat back
- (22) Fourth seat back
- (23) Fifth seat back
- (24) Seat cushion
- (25) Back door/panel (e.g., tailgate)
- (26) Other interior component (specify): _____
- (27) Side panel - forward of the A-pillar
- (28) Side panel - rear of the A-pillar

Exterior Components
- (30) Hood
- (31) Outside surface of this vehicle (specify): _____
- (32) Other exterior object in the environment (specify): _____
- (33) Unknown exterior object
- (97) Catastrophic
- (98) Intrusion of unlisted component(s) (specify): _____
- (99) Unknown

MAGNITUDE OF INTRUSION

- (1) ≥ 1 inch but < 3 inches
- (2) ≥ 3 inches but < 6 inches
- (3) ≥ 6 inches but < 12 inches
- (4) ≥ 12 inches but < 18 inches
- (5) ≥ 18 inches but < 24 inches
- (6) ≥ 24 inches
- (7) Catastrophic
- (9) Unknown

DOMINANT CRUSH DIRECTION

- (1) Vertical
- (2) Longitudinal
- (3) Lateral
- (7) Catastrophic
- (9) Unknown

STEERING RIM/SPOKE DEFORMATION

COMPARISON VALUE	—	DAMAGE VALUE	=	DEFORMATION
	—		=	
	—		=	
	—		=	
	—		=	

STEERING COLUMN

87. Steering Column Type 1
(1) Fixed column
(2) Tilt column
(3) Telescoping column
(4) Tilt and telescoping column
(8) Other column type (specify): _____
(9) Unknown

88. Blank X X
(This variable is left blank so that numbering consistency can be maintained with the 1988-91 CDS.

89. Blank X X X
(This variable is left blank so that numbering consistency can be maintained with the 1988-91 CDS.

90. Blank X X X
(This variable is left blank so that numbering consistency can be maintained with the 1988-91 CDS.

91. Blank X X X
(This variable is left blank so that numbering consistency can be maintained with the 1988-91 CDS.

92. Steering Rim/Spoke Deformation Ø
____Code actual measured deformation to the nearest inch.
(0) No steering rim deformation
(1-5) Actual measured value
(6) 6 inches or more
(8) Observed deformation cannot be measured
(9) Unknown

93. Location of Steering Rim/Spoke Deformation Ø Ø
(00) No steering rim deformation

Quarter Sections
(01) Section A
(02) Section B
(03) Section C
(04) Section D

Half Sections
(05) Upper half of rim/spoke
(06) Lower half of rim/spoke
(07) Left half of rim/spoke
(08) Right half of rim/spoke

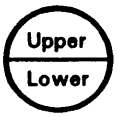

(09) Complete steering wheel collapse
(10) Undetermined location
(99) Unknown

INSTRUMENT PANEL

94. Odometer Reading 1 3 4,000
34,394 miles—Code mileage to the nearest 1,000 miles + 100,000 FOR AGE
(000) No odometer
(001) Less than 1,500 miles
(300) 299,500 miles or more
(999) Unknown

Source: [redacted]

95. Instrument Panel Damage from Occupant Contact? Ø
(0) No
(1) Yes
(9) Unknown

96. Knee Bolsters Deformed from Occupant Contact? 8
(0) No
(1) Yes
(8) Not present
(9) Unknown

97. Did Glove Compartment Door Open During Collision(s)? Ø
(0) No
(1) Yes
(8) Not present
(9) Unknown

VEHICLE INTERIOR SKETCHES

Note area of ejection/entrapment

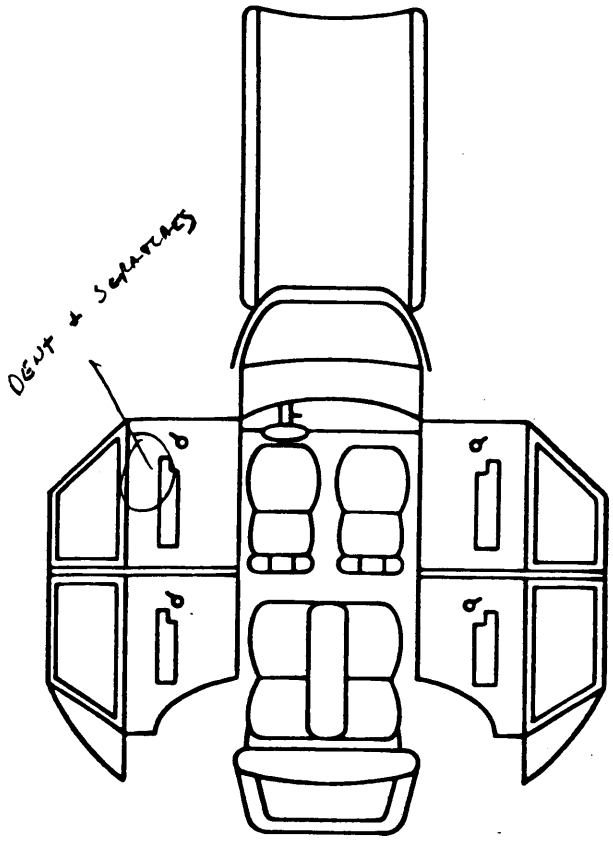

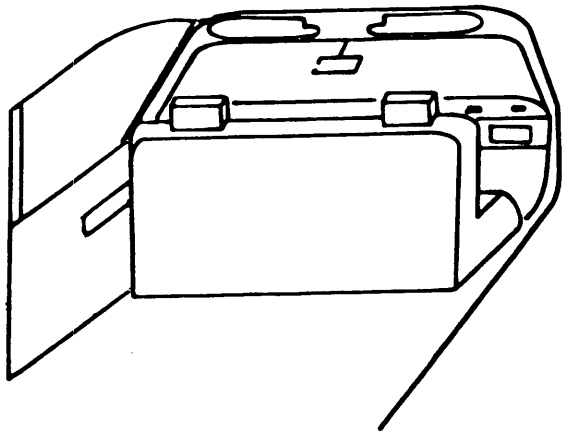

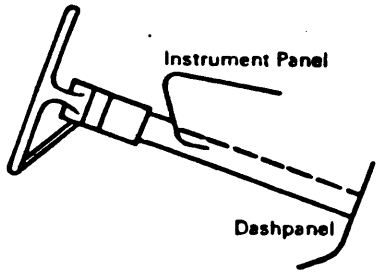

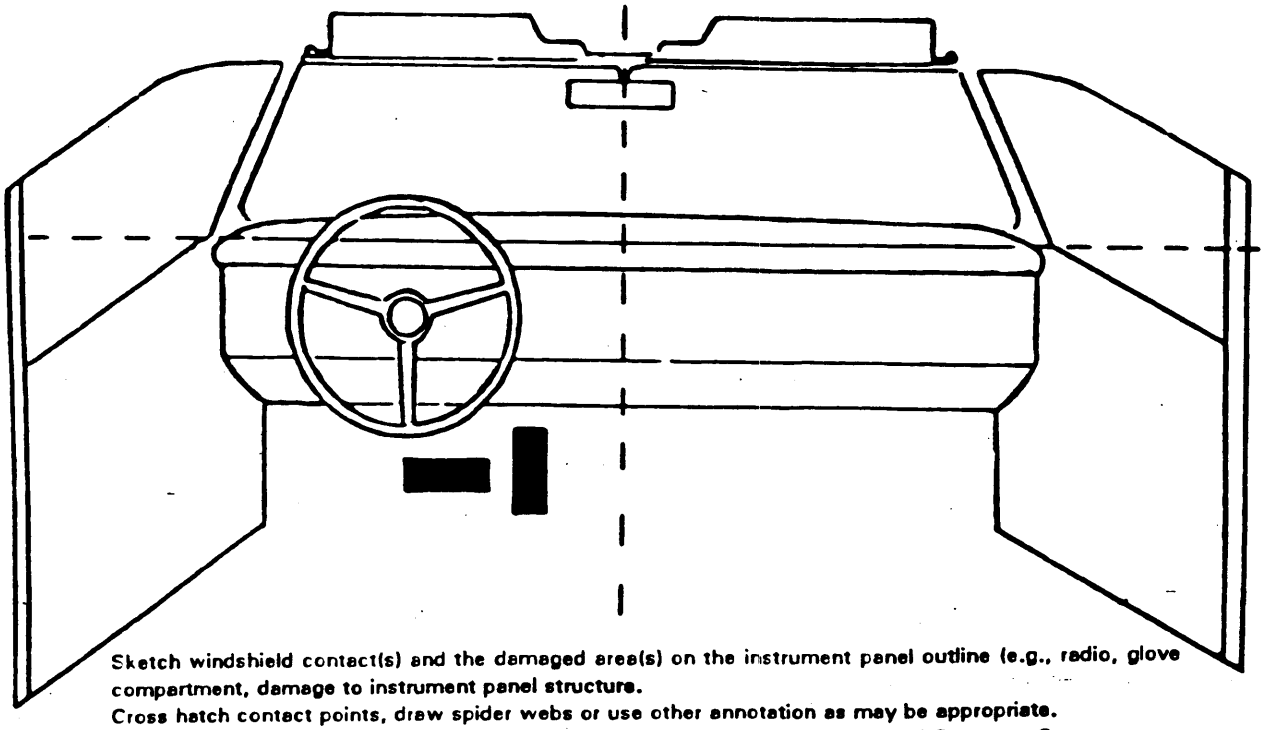

Sketch windshield contact(s) and the damaged area(s) on the instrument panel outline (e.g., radio, glove compartment, damage to instrument panel structure.
Cross hatch contact points, draw spider webs or use other annotation as may be appropriate.
Annotate the contacted area with a letter (begin with A) and list on the Points of Occupant Contact page.

49 - 1294

POINTS OF OCCUPANT CONTACT

Contact	Interior Component Contacted	Occupant No. If Known	Body Region If Known	Supporting Physical Evidence	Confidence Level of Contact Point
A	20	01	UNK	DENT AND SCRATCHES ON DOOR PANEL	1
B					
C					
D					
E					
F					
G					
H					
I					
J					
K					
L					
M					
N					

CODES FOR INTERIOR COMPONENTS

FRONT
- (01) Windshield
- (02) Mirror
- (03) Sunvisor
- (04) Steering wheel rim
- (05) Steering wheel hub/spoke
- (06) Steering wheel (combination of codes 04 and 05)
- (07) Steering column, transmission selector lever, other attachment
- (08) Add on equipment (e.g., CB, tape deck, air conditioner)
- (09) Left instrument panel and below
- (10) Center instrument panel and below
- (11) Right instrument panel and below
- (12) Glove compartment door
- (13) Knee bolster
- (14) Windshield including one or more of the following: front header, A-pillar, instrument panel, mirror, or steering assembly (driver side only)
- (15) Windshield including one or more of the following: front header, A-pillar, instrument panel, or mirror (passenger side only)
- (16) Other front object (specify): _____

LEFT SIDE
- (20) Left side interior surface, excluding hardware or armrests
- (21) Left side hardware or armrest
- (22) Left A pillar
- (23) Left B pillar
- (24) Other left pillar (specify): _____
- (25) Left side window glass or frame
- (26) Left side window glass including one or more of the following: frame, window sill, A pillar, B pillar, or roof side rail.
- (27) Other left side object (specify): _____
- (28) Left side window sill

RIGHT SIDE
- (30) Right side interior surface, excluding hardware or armrests
- (31) Right side hardware or armrest
- (32) Right A pillar
- (33) Right B pillar
- (34) Other right pillar (specify): _____
- (35) Right side window glass or frame
- (36) Right side window glass including one or more of the following: frame, window sill, A pillar, B pillar, or roof side rail.
- (37) Other right side object (specify): _____
- (38) Right side window sill

INTERIOR
- (40) Seat, back support
- (41) Belt restraint webbing/buckle
- (42) Belt restraint B-pillar attachment point
- (43) Other restraint system component (specify): _____
- (44) Head restraint system
- (45) Air bag
- (46) Other occupants (specify): _____
- (47) Interior loose objects
- (48) Child safety seat (specify): _____
- (49) Other interior object (specify): _____

ROOF
- (50) Front header
- (51) Rear header
- (52) Roof left side rail
- (53) Roof right side rail
- (54) Roof or convertible top

FLOOR
- (56) Floor (including toe pan)
- (57) Floor or console mounted transmission lever, including console
- (58) Parking brake handle
- (59) Foot controls including parking brake

REAR
- (60) Backlight (rear window)
- (61) Backlight storage rack, door, etc.
- (62) Other rear object (specify): _____

CONFIDENCE LEVEL OF CONTACT POINT
- (1) Certain
- (2) Probable
- (3) Possible
- (9) Unknown

AUTOMATIC RESTRAINTS

NOTES: Encode the data for each applicable front seat position. The attribute for the variables may be found below. Restraint systems should be assessed during the vehicle inspection then coded on the Occupant Assessment Form.

AIR BAGS

		Left	Right
FIRST	Availability/Function		
	Deployment		
	Failure		

Air Bag System Availability/Function
(0) Not equipped/not available
(1) Air bag

Non-functional
(2) Air bag disconnected (specify): _____
(3) Air bag not reinstalled
(9) Unknown

Air Bag System Deployment
(0) Not equipped/not available
(1) Air bag deployed during accident (as a result of impact)
(2) Air bag deployed inadvertently just prior to accident
(3) Air bag deployed, accident sequence undetermined
(4) Nondeployed
(5) Unknown if deployed
(6) Air bag deployed as a result of a noncollision event during accident sequence (e.g., fire, explosion, electrical)
(9) Unknown

Did Air Bag System Fail?
(0) Not equipped/not available
(1) No
(2) Yes (specify): _____
(9) Unknown

AUTOMATIC BELTS

		Left	Right
FIRST	Availability/Function		
	Use		
	Type		
	Proper Use		
	Failure Modes		

Automatic (Passive) Belt System Availability/Function
(0) Not equipped/not available
(1) 2 point automatic belts
(2) 3 point automatic belts
(3) Automatic belts - type unknown

Non-functional
(4) Automatic belts destroyed or rendered inoperative
(9) Unknown

Automatic (Passive) Belt System Use
(0) Not equipped/not available/destroyed or rendered inoperative
(1) Automatic belt in use
(2) Automatic belt not in use (manually disconnected, motorized track inoperative)
(3) Automatic belt use unknown
(9) Unknown

Automatic (Passive) Belt System Type
(0) Not equipped/not available
(1) Non-motorized system
(2) Motorized system
(9) Unknown

Proper Use of Automatic (Passive) Belt System
(0) Not equipped/not available/not used
(1) Automatic belt used properly
(2) Automatic belt used properly with child safety seat

Automatic Belt Used Improperly
(3) Automatic shoulder belt worn under arm
(4) Automatic shoulder belt worn behind back
(5) Automatic belt worn around more than one person
(6) Lap portion of automatic belt worn on abdomen
(7) Automatic lap and shoulder belt or automatic shoulder belt used improperly with child safety seat (specify): _____
(8) Other improper use of automatic belt system (specify): _____
(9) Unknown

Automatic (Passive) Belt Failure Modes During Accident
(0) Not equipped/not available/not in use
(1) No automatic belt failure(s)
(2) Torn webbing (stretched webbing not included)
(3) Broken buckle or latchplate
(4) Upper anchorage separated
(5) Other anchorage separated (specify): _____
(6) Broken retractor
(7) Combination of above (specify):
(8) Other automatic belt failure (specify): _____
(9) Unknown

MANUAL RESTRAINTS

NOTES: Encode the applicable data for each seat position in the vehicle. The attribute for the variable may be found below. Restraint systems should be assessed during the vehicle inspection then coded on the Ocupant Assessment Form.

If a Child safety seat is present, encode the data on the back of this page.

If the vehicle has automatic restraints available, encode the appropriate data on the back of the previous page.

		Left	Center	Right
FIRST	Availability	4	3	4
	Use	Ø4	ØØ	Ø4
	Failure Modes	1	Ø	1
SECOND	Availability	3	3	3
	Use	ØØ	ØØ	ØØ
	Failure Modes	Ø	Ø	Ø
THIRD	Availability			
	Use			
	Failure Modes			
OTHER	Availability			
	Use			
	Failure Modes			

Manual (Active) Belt System Availability

(0) None available
(1) Belt removed/destroyed
(2) Shoulder belt
(3) Lap belt
(4) Lap and shoulder belt
(5) Belt available - type unknown

Integral Belt Partially Destroyed

(6) Shoulder belt (lap belt destroyed/removed)
(7) Lap belt (shoulder belt destroyed/removed)

(8) Other belt (specify): _____

(9) Unknown

Manual (Active) Belt System Use

(00) None used, not available, or belt removed/destroyed
(01) Inoperable (specify): _____
(02) Shoulder belt
(03) Lap belt
(04) Lap and shoulder belt
(05) Belt used - type unknown
(08) Other belt used (specify): _____
(12) Shoulder belt used with child safety seat
(13) Lap belt used with child safety seat
(14) Lap and shoulder belt used with child safety seat
(15) Belt used with child safety seat - type unknown
(18) Other belt used with child safety seat (specify): _____
(99) Unknown if belt used

Manual (Active) Belt Failure Modes During Accident

(0) No manual belt used or not available
(1) No manual belt failure(s)
(2) Torn webbing (stretched webbing not included)
(3) Broken buckle or latchplate
(4) Upper anchorage separated
(5) Other anchorage separated (specify): _____
(6) Broken retractor
(7) Combination of above (specify): _____
(8) Other manual belt failure (specify): _____
(9) Unknown

CHILD SAFETY SEAT FIELD ASSESSMENT

When a child safety seat is present enter the occupant's number in the first row and complete the column below the occupant's number using the codes listed below. Complete a column for each child safety seat present.

Occupant Number						
1. Type of Child Safety Seat						
2. Child Safety Seat Orientation						
3. Child Safety Seat Harness Usage						
4. Child Safety Seat Shield Uasge						
5. Child Safety Seat Tether Usage						
6. Child Safety Seat Make/Model	Specify Below for Each Child Safety Seat					

1. Type of Child Safety Seat

   (0) No child safety seat
   (1) Infant seat
   (2) Toddler seat
   (3) Convertible seat
   (4) Booster seat
   (7) Other type child safety seat (specify):

   _____

   (8) Unknown child safety seat type
   (9) Unknown if child safety seat used

2. Child Safety Seat Orientation

   (00) No child safety seat

   Designed for Rear Facing for This Age/Weight
   (01) Rear facing
   (02) Forward facing
   (08) Other orientation (specify):

   _____

   (09) Unknown orientation

   Designed for Forward Facing for This Age/Weight
   (11) Rear facing
   (12) Forward facing
   (18) Other orientation (specify):

   _____

   (19) Unknown orientation

   Unknown Design or Orientation For This Age/Weight, or Unknown Age/Weight
   (21) Rear facing
   (22) Forward facing
   (28) Other orientation (specify):

   _____

   (29) Unknown orientation

   (99) Unknown if child safety seat used

3. Child Safety Seat Harness Usage

4. Child Safety Seat Shield Usage

5. Child Safety Seat Tether Usage
   Note: Options Below Are Used for Variables 3-5.

   (00) No child safety seat

   Not Designed with Harness/Shield/Tether
   (01) After market harness/shield/tether added, not used
   (02) After market harness/shield/tether used
   (03) Child safety seat used, but no after market harness/shield/tether added
   (09) Unknown if harness/shield/tether added or used

   Designed With Harness/Shield/Tether
   (11) Harness/shield/tether not used
   (12) Harness/shield/tether used
   (19) Unknown if harness/shield/tether used

   Unknown If Designed With Harness/Shield/Tether
   (21) Harness/shield/tether not used
   (22) Harness/shield/tether used
   (29) Unknown if harness/shield/tether used

   (99) Unknown if child safety seat used

6. Child Safety Seat Make/Model
   (Specify make/model and occupant number)

   _____

   _____

   _____

   _____

49-129A

HEAD RESTRAINTS/SEAT EVALUATION

NOTES: Encode the applicable data for each seat position in the vehicle. The attribute for these variables may be found at the bottom of the page. Head restraint type/damage and seat type/performance should be assessed during the vehicle inspection then coded on the Occupant Assessment Form.

		Left	Center	Right
FIRST	Head Restraint Type/Damage	3	Ø	3
	Seat Type	Ø7	Ø7	Ø7
	Seat Performance	1	1	1
	Seat Orientation	1	1	1
SECOND	Head Restraint Type/Damage	Ø	Ø	Ø
	Seat Type	Ø3	Ø3	Ø3
	Seat Performance	6	1	1
	Seat Orientation	1	1	1
THIRD	Head Restraint Type/Damage			
	Seat Type			
	Seat Performance			
	Seat Orientation			
OTHER	Head Restraint Type/Damage			
	Seat Type			
	Seat Performance			
	Seat Orientation			

Head Restraint Type/Damage by Occupant at This Occupant Position

(0) No head restraints
(1) Integral — no damage
(2) Integral — damaged during accident
(3) Adjustable — no damage
(4) Adjustable — damaged during accident
(5) Add-on — no damage
(6) Add-on — damaged during accident
(8) Other Specify): _____
(9) Unknown

Seat Type (this Occupant Position)

(00) No seat
(01) Bucket
(02) Bucket with folding back
(03) Bench
(04) Bench with separate back cushions
(05) Bench with folding back(s)
(06) Split bench with separate back cushions
(07) Split bench with folding back(s)
(08) Pedestal (i.e., column supported)
(09) Other seat type (specify): _____
(10) Box mounted seat (i.e., van type)
(99) Unknown

Seat Performance (this Occupant Position)

(0) No seat
(1) No seat performance failure(s)
(2) Seat adjusters failed
(3) Seat back folding locks or "seat back" failed specify: _____
(4) Seat tracks/anchors failed
(5) Deformed by impact of occupant
(6) Deformed by passenger compartment intrusion (specify): LEFT QUARTER PANEL
(7) Combination of above (specify): _____
(8) Other (specify): _____
(9) Unknown

Seat Orientation (this Occupant Position)

(0) No seat
(1) Forward facing seat
(2) Rear facing seat
(3) Side facing seat (inward)
(4) Side facing seat (outward)
(8) Other (specify): _____
(9) Unknown

DESCRIBE ANY INDICATION OF ABNORMAL OCCUPANT POSTURE (I.E., UNUSUAL OCCUPANT CONTACT PATTERN)

EJECTION/ENTRAPMENT DATA

Complete the following if the researcher has any indication that an occupant was either ejected from or entrapped in the vehicle. Code the appropriate data on the Occpant Assessment Form.

EJECTION No [X] Yes [ ]

Describe indications of ejection and body parts involved in partial ejection(s):

_____

_____

_____

_____

_____

Occupant Number						
Ejection						
(Note on Vehicle Interior Sketch) Ejection Area						
Ejection Medium						
Medium Status						

Ejection
- (1) Complete ejection
- (1) Partial ejection
- (3) Ejection, Unknown degree
- (9) Unknown

Ejection Area
- (1) Windshield
- (2) Left front
- (3) Right front
- (4) Left rear
- (5) Right rear
- (6) Rear
- (7) Roof
- (8) Other area (e.g., back of pickup, etc.) (specify): _____
- (9) Unknown

Ejection Medium
- (1) Door/hatch/tailgate
- (2) Nonfixed roof structure
- (3) Fixed glazing
- (4) Nonfixed glazing (specify): _____
- (5) Integral structure
- (8) Other medium (specify): _____
- (9) Unknown

Medium Status (Immediately Prior to Impact)
- (1) Open
- (2) Closed
- (3) Integral structure
- (9) Unknown

ENTRAPMENT No [X] Yes [ ]

Describe entrapment mechanism: _____

_____

_____

_____

_____

Component(s): _____

_____

(Note in vehicle interior diagram)

26. Seat Type (this Occupant Position) Ø 7
(00) Occupant not seated or no seat
(01) Bucket
(02) Bucket with folding back
(03) Bench
(04) Bench with separate back cushions
(05) Bench with folding back(s)
(06) Split bench with separate back cushions
(07) Split bench with folding back(s)
(08) Pedestal (i.e., column supported)
(09) Other seat type (specify): _____
(10) Box mounted seat (i.e., van type)
(99) Unknown

27. Seat Performance (this Occupant Position) 1
(0) Occupant not seated or no seat
(1) No seat performance failure(s)
(2) Seat adjusters failed
(3) Seat back folding locks or "seat back" failed
(4) Seat track/anchors failed
(5) Deformed by impact of occupant
(6) Deformed by passenger compartment intrusion (specify): _____
(7) Combination of above (specify): _____
(8) Other (specify): _____
(9) Unknown

CHILD SAFETY SEAT

28. Child Safety Seat Make/Model Ø Ø Ø
(000) No child safety seat
Applicable codes are found in your NASS CDS Data Collection, Coding and Editing
(950) Built-in child safety seat
(997) Other make/model (specify): _____
(998) Unknown make/model
(999) Unknown if child safety seat used

29. Type of Child Safety Seat Ø
(0) No child safety seat
(1) Infant seat
(2) Toddler seat
(3) Convertible seat
(4) Booster seat
(7) Other type child safety seat (specify): _____
(8) Unknown child safety seat type
(9) Unknown if child safety seat used

30. Child Safety Seat Orientation Ø Ø
(00) No child safety seat

Designed for Rear Facing for This Age/Weight
(01) Rear facing
(02) Forward facing
(08) Other orientation (specify): _____
(09) Unknown orientation

Designed For Forward Facing for This Age/Weight
(11) Rear facing
(12) Forward facing
(18) Other orientation (specify): _____
(19) Unknown orientation

Unknown Design or Orientation For This Age/Weight, or Unknown Age/Weight
(21) Rear facing
(22) Forward facing
(28) Other orientation (specify): _____
(29) Unknown orientation

(99) Unknown if child safety seat used

31. Child Safety Seat Harness Usage Ø Ø

32. Child Safety Seat Shield Usage Ø Ø

33. Child Safety Seat Tether Usage Ø Ø
Note: Options below applicable to Variables OA31-OA33.
(00) No child safety seat

Not Designed With Harness/Shield/Tether
(01) After market harness/shield/tether added, not used
(02) After market harness/shield/tether used
(03) Child safety seat used, but no after market harness/shield/tether added
(09) Unknown if harness/shield/tether added or used

Designed With Harness/Shield/Tether
(11) Harness/shield/tether not used
(12) Harness/shield/tether used
(19) Unknown if harness/shield/tether used

Unknown If Designed With Harness/Shield/Tether
(21) Harness/shield/tether not used
(22) Harness/shield/tether used
(29) Unknown if harness/shield/tether used

(99) Unknown if child safety seat used

PSU NUMBER 49

CASE NUMBER 129A

VEHICLE NUMBER 01

OCCUPANT NUMBER 01

OCCUPANT INJURY FORM

THE FOLLOWING DATA IS NOT INCLUDED IN THIS CASE:

[✓] ENTIRE FORM

[] PAGE NUMBER (S) _____

49-129A
V2

OCCUPANT RELATED

16. Driver Presence in Vehicle 1
    (0) Driver not present
    (1) Driver present
    (9) Unknown

17. Number of Occupants This Vehicle Ø 1
    (00-96) Code actual number of occupants for this vehicle
    (97) 97 or more
    (99) Unknown

18. Number of Occupant Forms Submitted Ø 1

VEHICLE WEIGHT ITEMS

19. Vehicle Curb Weight Ø 3,600
    3622 Code weight to nearest 100 pounds.
    (010) Less than 1050 pounds
    (135) 13,500 pounds or more
    (999) Unknown

    Source: [redacted]

20. Vehicle Cargo Weight 9,900
    ____ Code weight to nearest 100 pounds.
    (00) Less than 50 pounds
    (97) 9,650 pounds or more
    (99) Unknown

RECONSTRUCTION DATA

21. Towed Trailing Unit Ø
    (0) No towed unit
    (1) Yes—towed trailing unit
    (9) Unknown

22. Documentation of Trajectory Data for This Vehicle Ø
    (0) No
    (1) Yes

23. Post Collision Condition of Tree or Pole (For Highest Delta V) Ø
    (0) Not collision (for highest delta V) with tree or pole
    (1) Not damaged
    (2) Cracked/sheared
    (3) Tilted <45 degrees
    (4) Tilted ≥45 degrees
    (5) Uprooted tree
    (6) Separated pole from base
    (7) Pole replaced
    (8) Other (specify): _____
    (9) Unknown

24. Rollover 9
    (0) No rollover (no overturning)

    Rollover (primarily about the longitudinal axis)
    (1) Rollover, 1 quarter turn only
    (2) Rollover, 2 quarter turns
    (3) Rollover, 3 quarter turns
    (4) Rollover, 4 or more quarter turns (specify): _____

    (5) Rollover--end-over-end (i.e., primarily about the lateral axis)
    (9) Rollover (overturn), details unknown

OVERRIDE/UNDERRIDE (THIS VEHICLE)

25. Front Override/Underride (this Vehicle) Ø

26. Rear Override/Underride (this Vehicle) Ø

    (0) No override/underride, or not an end-to-end impact

    Override (see specific CDC)
    (1) 1st CDC
    (2) 2nd CDC
    (3) Other not automated CDC (specify): _____

    Underride (see specific CDC)
    (4) 1st CDC
    (5) 2nd CDC
    (6) Other not automated CDC (specify): _____

    (7) Medium/heavy truck or bus override
    (9) Unknown

HEADING ANGLE AT IMPACT FOR HIGHEST DELTA V

Values: (000)-(359) Code actual value
(997) Noncollision
(998) Impact with object
(999) Unknown

27. Heading Angle For This Vehicle 999

28. Heading Angle For Other Vehicle 999

49-129A
V-02

Category	Configuration	ACCIDENT TYPES (Includes Intent)					
I. Single Driver	A. Right Roadside Departure	01 DRIVE OFF ROAD	02 CONTROL/ TRACTION LOSS	03 AVOID COLLISION WITH VEH., PED., ANIM.	04 SPECIFICS OTHER	05 SPECIFICS UNKNOWN	
	B. Left Roadside Departure	06 DRIVE OFF ROAD	07 CONTROL/ TRACTION LOSS	08 AVOID COLLISION WITH VEH., PED., ANIM.	09 SPECIFICS OTHER	10 SPECIFICS UNKNOWN	
	C. Forward Impact	11 PARKED VEH.	12 STA. OBJECT	13 PEDESTRIAN/ ANIMAL	14 END DEPARTURE	15 SPECIFICS OTHER	16 SPECIFICS UNKNOWN
II. Same Trafficway Same Direction	D. Rear-End	20, 21, 22, 23 STOPPED 21, 22, 23	24, 25, 26, 27 SLOWER 25, 26, 27	28, 29, 30, 31 DECEL. 29, 30, 31	(EACH • 32) SPECIFICS OTHER	(EACH • 33) SPECIFICS UNKNOWN	
	E. Forward Impact	34, 35 CONTROL/ TRACTION LOSS	36, 37 CONTROL/ TRACTION LOSS	38, 39 AVOID COLLISION WITH VEH.	40, 41 AVOID COLLISION WITH OBJECT	(EACH • 42) SPECIFICS OTHER	(EACH • 43) SPECIFICS UNKNOWN
	F. Sideswipe Angle	44, 45	46, 45, 47	(EACH • 48) SPECIFICS OTHER	(EACH • 49) SPECIFICS UNKNOWN		
III. Same Trafficway Opposite Direction	G. Head-On	50, 51 LATERAL MOVE	(EACH • 52) SPECIFICS OTHER	(EACH • 53) SPECIFICS UNKNOWN			
	H. Forward Impact	54, 55 CONTROL/ TRACTION LOSS	56, 57 CONTROL/ TRACTION LOSS	58, 59 AVOID COLLISION WITH VEH.	60, 61 AVOID COLLISION WITH OBJECT	(EACH • 62) SPECIFICS OTHER	(EACH • 63) SPECIFICS UNKNOWN
	I. Sideswipe/ Angle	64, 65 LATERAL MOVE	(EACH • 66) SPECIFICS OTHER	(EACH • 67) SPECIFICS UNKNOWN			
IV. Change Trafficway Vehicle Turning	J. Turn Across Path	68, 69 INITIAL OPPOSITE DIRECTIONS	71, 70 INITIAL SAME DIRECTIONS	73, 72	(EACH • 74) SPECIFICS OTHER	(EACH • 75) SPECIFICS UNKNOWN	
	K. Turn Into Path	76, 77 TURN INTO SAME DIRECTION	78, 79 TURN INTO SAME DIRECTION	80, 81 TURN INTO OPPOSITE DIRECTIONS	82, 83 TURN INTO OPPOSITE DIRECTIONS	(EACH • 84) SPECIFICS OTHER	(EACH • 85) SPECIFICS UNKNOWN
V. Intersecting Paths (Vehicle Damage)	L. Straight Paths	86, 87	88, 89	(EACH • 90) SPECIFICS OTHER	(EACH • 91) SPECIFICS UNKNOWN		
VI. Miscellaneous	M. Backing Etc.	92 BACKING VEH.	93 OTHER VEH. OR OBJECT	98 Other Accident Type 99 Unknown Accident Type 00 No Impact			

OTHER DATA

56. Driver's Zip Code [redacted]

(00000) Driver not present
(00001) Driver not a resident of U.S. or territories
_____ Code actual 5-digit zip code
(99999) Unknown

57. Driver's Race/Ethnic Origin 9X

(0) Driver not present
(1) White (non-Hispanic)
(2) Black (non-Hispanic)
(3) White (Hispanic)
(4) Black (Hispanic)
(5) American Indian, Eskimo or Aleut
(6) Asian or Pacific Islander
(8) Other (specify): _____
(9) Unknown

NASS Cdng Crib
1st Rev
2nd Rev

58. Vehicle Special Use (This Trip) Ø

(0) No special use
(1) Taxi
(2) Vehicle used as school bus
(3) Vehicle used as other bus
(4) Military
(5) Police
(6) Ambulance
(7) Hearse
(8) Fire truck or car
(9) Unknown

ROLLOVER DATA

If GV07 (Body Type) ≠ 1-49, leave GV59-GV63 blank.
If GV24 (Rollover) = 0, then GV59-GV63 must equal 0.
If GV24 = 9, then GV59-GV63 must equal 9.

59. Rollover Initiation Type 9

(0) No rollover
(1) Trip-over
(2) Flip-over
(3) Turn-over
(4) Climb-over
(5) Fall-over
(6) Bounce-over
(7) Collision with another vehicle
(8) Other rollover initiation type specify): _____
(9) Unknown rollover initiation type

60. Location of Rollover Initiation 9

(0) No rollover
(1) On roadway
(2) On shoulder—paved
(3) On shoulder—unpaved
(4) On roadside or divided trafficway median
(9) Unknown

61. Rollover Initiation Object Contacted 9 9

62. Location on Vehicle Where Initial Principal Tripping Force Is Applied 9

(0) No rollover
(1) Wheels/tires
(2) Side plane
(3) End plane
(4) Undercarriage
(5) Other location on vehicle (specify): _____
(8) Non-contact rollover forces (specify): _____
(9) Unknown

63. Direction of Initial Roll 9

(0) No rollover
(1) Roll right - primarily about the longitudinal axis
(2) Roll left - primarily about the longitudinal axis
(5) End-over-end (i.e., primarily about the lateral axis)
(9) Unknown roll direction

PRECRASH DATA

64. Pre-Event Movement (Prior to Recognition of Critical Event) Ø 1

(01) Going straight
(02) Slowing or stopping in traffic lane
(03) Starting in traffic lane
(04) Stopped in traffic lane
(05) Passing or overtaking another vehicle
(06) Disabled or parked in travel lane
(07) Leaving a parking position
(08) Entering a parking position
(09) Turning right
(10) Turning left
(11) Making a U-turn
(12) Backing up (other than for parking position)
(13) Negotiating a curve
(14) Changing lanes
(15) Merging
(16) Successful avoidance maneuver to a previous critical event
(97) Other (specify): _____
(98) No driver present
(99) Unknown

49-129A
V-02

CODES FOR ROLLOVER INITIATION OBJECT CONTACTED

(00) No rollover
(01-30) — Vehicle Number

Noncollision
(31) Turn-over — fall-over
(33) Jackknife

Collision With Fixed Object
(41) Tree (≤ 4 inches in diameter)
(42) Tree (> 4 inches in diameter)
(43) Shrubbery or bush
(44) Embankment

(45) Breakaway pole or post (any diameter)

Nonbreakaway Pole or Post
(50) Pole or post (≤ 4 inches in diameter)
(51) Pole or post (> 4 inches but ≤ 12 inches in diameter)
(52) Pole or post (> 12 inches in diameter)
(53) Pole or post (diameter unknown)

(54) Concrete traffic barrier
(55) Impact attenuator
(56) Other traffic barrier (includes guardrail) (specify):_____

(57) Fence
(58) Wall
(59) Building
(60) Ditch or culvert
(61) Ground
(62) Fire hydrant
(63) Curb
(64) Bridge
(68) Other fixed object (specify):
_____
(69) Unknown fixed object

Collision with Nonfixed Object
(71) Motor vehicle not in-transport
(76) Animal
(77) Train
(78) Trailer, disconnected in transport
(88) Other nonfixed object (specify):
_____
(89) Unknown nonfixed object

(98) Other event (specify):
_____
(99) Unknown event or object

PSU NUMBER 49

CASE NUMBER 129A

VEHICLE NUMBER 02

EXTERIOR VEHICLE FORM

THE FOLLOWING DATA IS NOT INCLUDED IN THIS CASE:

[✓] ENTIRE FORM

[] PAGE NUMBER (S) _____

PSU NUMBER 49

CASE NUMBER 129A

VEHICLE NUMBER 02

INTERIOR VEHICLE FORM

THE FOLLOWING DATA IS NOT INCLUDED IN THIS CASE:

[✓] ENTIRE FORM

[] PAGE NUMBER (S) _____

26. Seat Type (this Occupant Position) 9 9
(00) Occupant not seated or no seat
(01) Bucket
(02) Bucket with folding back
(03) Bench
(04) Bench with separate back cushions
(05) Bench with folding back(s)
(06) Split bench with separate back cushions
(07) Split bench with folding back(s)
(08) Pedestal (i.e., column supported)
(09) Other seat type (specify): _____
(10) Box mounted seat (i.e., van type)
(99) Unknown

27. Seat Performance (this Occupant Position) 9
(0) Occupant not seated or no seat
(1) No seat performance failure(s)
(2) Seat adjusters failed
(3) Seat back folding locks or "seat back" failed
(4) Seat track/anchors failed
(5) Deformed by impact of occupant
(6) Deformed by passenger compartment intrusion (specify): _____
(7) Combination of above (specify): _____
(8) Other (specify): _____
(9) Unknown

CHILD SAFETY SEAT

28. Child Safety Seat Make/Model Ø Ø Ø
(000) No child safety seat
Applicable codes are found in your NASS CDS Data Collection, Coding and Editing
(950) Built-in child safety seat
(997) Other make/model (specify): _____
(998) Unknown make/model
(999) Unknown if child safety seat used

29. Type of Child Safety Seat Ø
(0) No child safety seat
(1) Infant seat
(2) Toddler seat
(3) Convertible seat
(4) Booster seat
(7) Other type child safety seat (specify): _____
(8) Unknown child safety seat type
(9) Unknown if child safety seat used

30. Child Safety Seat Orientation Ø Ø
(00) No child safety seat

Designed for Rear Facing for This Age/Weight
(01) Rear facing
(02) Forward facing
(08) Other orientation (specify): _____
(09) Unknown orientation

Designed For Forward Facing for This Age/Weight
(11) Rear facing
(12) Forward facing
(18) Other orientation (specify): _____
(19) Unknown orientation

Unknown Design or Orientation For This Age/Weight, or Unknown Age/Weight
(21) Rear facing
(22) Forward facing
(28) Other orientation (specify): _____
(29) Unknown orientation

(99) Unknown if child safety seat used

31. Child Safety Seat Harness Usage Ø Ø

32. Child Safety Seat Shield Usage Ø Ø

33. Child Safety Seat Tether Usage Ø Ø
Note: Options below applicable to Variables OA31-OA33.
(00) No child safety seat

Not Designed With Harness/Shield/Tether
(01) After market harness/shield/tether added, not used
(02) After market harness/shield/tether used
(03) Child safety seat used, but no after market harness/shield/tether added
(09) Unknown if harness/shield/tether added or used

Designed With Harness/Shield/Tether
(11) Harness/shield/tether not used
(12) Harness/shield/tether used
(19) Unknown if harness/shield/tether used

Unknown If Designed With Harness/Shield/Tether
(21) Harness/shield/tether not used
(22) Harness/shield/tether used
(29) Unknown if harness/shield/tether used

(99) Unknown if child safety seat used

PSU NUMBER 49

CASE NUMBER 129A

VEHICLE NUMBER 02

OCCUPANT NUMBER 01

OCCUPANT INJURY FORM

THE FOLLOWING DATA IS NOT INCLUDED IN THIS CASE:

[✓] ENTIRE FORM

[] PAGE NUMBER (S) _____

U.S. Department of Transportation
National Highway Traffic Safety Administration

[redacted] 1993

UPDATE FORM

NATIONAL ACCIDENT SAMPLING SYSTEM
CRASHWORTHINESS DATA SYSTEM

1. Primary Sampling Unit Number: 4 9
2. Case Number – Stratum: 1 2 9 A
3. Vehicle Number: Ø 2
4. Occupant Number: Ø 1

Driver or Occupant Name: _____

Address: _____

_____

Other Information: _____

_____

(Sanitize this section prior to Update submission.)

UPDATED CASE INFORMATION

	INITIAL SUBMISSION	UPDATED INFORMATION
GV12. Alcohol Test Result Result for Driver	9 7	Ø Ø
GV39. Other Drug Specimen Test Type for Driver	1 ~~Ø~~	1
GV40.-GV41. Narcotic Drug	Ø Ø	1
GV42.-GV43. Depressant Drug	Ø Ø	7
GV44.-GV45. Stimulant Drug	Ø Ø	7
GV46.-GV47. Hallucinogen Drug	Ø Ø	7
GV48.-GV49. Cannabinoid Drug	Ø Ø	7
GV50.-GV51. Phencyclidine (PCP)	Ø Ø	7
GV52.-GV53. Inhalant Drug	Ø Ø	7
GV54.-GV55. Other Drug (Excluding Nicotine, Aspirin, Alcohol, Drugs Administered Post-Crash)	Ø Ø	7
GV56. Driver's Zip Code	[redacted]	
GV57. Driver's Race/Ethnic Origin	9 ~~1~~	
OA05. Occupant's Age	5 6 ✓	
OA06. Occupant's Sex	1 ✓	
OA07. Occupant's Height	7 Ø ✓	
OA08. Occupant's Weight	2 Ø Ø	2 1 8 ✓
OA17. Manual (Active) Belt System Availability	~~4~~ 9	
OA18. Manual (Active) Belt System Use	~~Ø Ø~~ 99	

	INITIAL SUBMISSION	UPDATED INFORMATION
OA21. Air Bag System Availability/Function	~~Ø~~ 1	
OA22. Air Bag System Deployment	~~Ø~~ 3	
OA35. Treatment - Mortality	1 ✓	
OA36. Type of Medical Facility (for Initial Treatment)	Ø ✓	
OA37. Hospital Stay	Ø Ø ✓	
OA38. Working Days Lost	6 2 ✓	
OA39. Time to Death	Ø 1 ✓	
OA40. 1st Medically Reported Cause of Death	9 9	9 7
OA41. 2nd Medically Reported Cause of Death	Ø Ø ✓	
OA42. 3rd Medically Reported Cause of Death	Ø Ø ✓	
OA43. Number of Recorded Injuries for This Occupant	9 7	1 8
OA44. Automatic (Passive) Belt System Availability/Function	~~Ø~~ 9	
OA45. Automatic (Passive) Belt System Use	~~Ø~~ 9	
OA50. Glasgow Coma Scale (GCS) Score	9 7	0 1
OA51 Was the Occupant Given Blood?	9	1
OA52. Arterial Blood Gases (ABG) - HCO_3	9 7	0 1
___. _____		
___. _____		

STATUS OF LOG INJURY INFORMATION

	INITIAL SUBMISSION	UPDATED INFORMATION
OAL12. Injury Treatment Status	1	
OAL13. Injury Information		
Official		
a. Autopsy (invasive examination)	B 0 8	1 1 1
b. Post-ER medical record which includes information about death based on non-invasive examination	B	
c. Admission record/summary or admission/discharge face sheet	B	
d. Discharge summary	B	
e. Operative report	B	
f. Radiographic record(s) post ER visit	B	
g. History and physical examination and/or consultation records	B	
h. Emergency room records	B	
i. Radiographic record(s) associated with ER visit	B	
j. Private physician	B	
Unofficial		
k. Lay coroner	B	
l. EMS record	B	
m. Interviewee	B	
n. Other source (specify):	B	B
o. Police report	B	B
OAL14. Medical Facility Code	0 9	
OIL07. Date Official Medical Data Obtained	[redacted]/[redacted]/92	

INJURY DATA CODED ON INITIAL SUBMISSION

	Source of Injury Data	O.I.C.-A.I.S Body Region	Aspect	Lesion	System Organ	A.I.S. Severity	Injury Source	Injury Source Confidence Level	Direct/ Indirect Injury	Occupant Area Intrusion No.
1st	5.	6.	7.	8.	9.	10.	11.	12.	13.	14.
2nd	15.	16.	17.	18.	19.	20.	21.	22.	23.	24.
3rd	25.	26.	27.	28.	29.	30.	31.	32.	33.	34.
4th	35.	36.	37.	38.	39.	40.	41.	42.	43.	44.
5th	45.	46.	47.	48.	49.	50.	51.	52.	53.	54.
6th	55.	56.	57.	58.	59.	60.	61.	62.	63.	64.
7th	65.	66.	67.	68.	69.	70.	71.	72.	73.	74.
8th	75.	76.	77.	78.	79.	80.	81.	82.	83.	84.
9th	85.	86.	87.	88.	89.	90.	91.	92.	93.	94.
10th	95.	96.	97.	98.	99.	100.	101.	102.	103.	104.
11th	105.	106.	107.	108.	109.	110.	111.	112.	113.	114.
12th	115.	116.	117.	118.	119.	120.	121.	122.	123.	124.
13th	125.	126.	127.	128.	129.	130.	131.	132.	133.	134.
14th	135.	136.	137.	138.	139.	140.	141.	142.	143.	144.
15th	145.	146.	147.	148.	149.	150.	151.	152.	153.	154.

Note: Keep a photocopy of the following original submitted pages when applicable: Exterior Vehicle Form pages 2, 3, 4; Interior Vehicle Form pages 1-reverse, 2, 4, 5; Occupant Injury Form pages 2, 3, 3-reverse; Interview Form pages 3, 4, 5.

49-129A
V2 01

INJURY DATA

Record below the actual injuries sustained by this occupant that were identified from the official and unofficial data sources. Remember not to double count an injury just because it was identified from two different sources. If greater than ten injuries have been documented, encode the balance on the Occupant Injury Supplement.

	Source of Injury Data	O.I.C.-A.I.S Body Region	Aspect	Lesion	System Organ	A.I.S. Severity	Injury Source	Injury Source Confidence Level	Direct/ Indirect Injury	Occupant Area Intrusion No.
1st	5. L	6. H	7. R W	8. L	9. I	10. 1	11. 97	12. 9	13. 7	14. 99
2nd	15. 1	16. F	17. C	18. A	19. I	20. 1	21. 97	22. 9	23. 7	24. 99
3rd	25. 1	26. F	27. C	28. L	29. I	30. 1	31. 97	32. 9	33. 7	34. 99
4th	35. 1	36. H	37. R	38. L	39. E	40. 1	41. 97	42. 9	43. 7	44. 99
5th	45. 1	46. K	47. R	48. P	49. I	50. 1	51. 09	52. 3	53. 1	54. 99
6th	55. 1	56. K	57. R	58. C	59. I	60. 1	61. 09	62. 3	63. 1	64. 99
7th	65. 1	66. K	67. L	68. A	69. I	70. 1	71. 09	72. 2	73. 1	74. 99
8th	75. 1	76. K	77. L	78. C	79. I	80. 1	81. 09	82. 2	83. 1	84. 99
9th	85. 1	86. H	87. S	88. A	89. I	90. 1	91. 97	92. 9	93. 7	94. 99
10th	95. 1	96. H	97. S	98. L	99. I	100 1	101.	102.	103.	104.

If greater than 10 injuries, continue on reverse side. If greater than 25 injuries, code additional on Occupant Injury Data Supplement.

OCCUPANT INJURY DATA

	Source of Injury Date	O.I.C.-A.I.S Body Region	Aspect	Lesion	System Organ	A.I.S. Severity	Injury Source	Injury Source Confidence Level	Direct/ Indirect Injury	Occupant Area Intrusion No.
11th	1	H	L	L	I	2	97	9	7	99
12th	1	~~B~~ H	~~S~~ W	C	I	1	97	9	7	99
13th	1	W	L	A	I	1	97	9	7	99
14th	1	W	L	C	I	1	97	9	7	99
15th	1	T	L	A	I	1	04	3	1	99
16th	1	T	L	C	I	1	04	3	1	99
17th	1	~~H~~ W	R	A	I	1	97	9	7	99
18th	1	~~H~~ W	R	L	I	1	97	9	7	99
19th	1	N	P	F	S	2	97	9	7	99
20th										
21st										
22nd										
23rd										
24th										
25th										

National Accident Sampling System-Crashworthiness Data System: Update Form

49-129A
V2.01

OFFICIAL INJURY DATA — SOFT TISSUE INJURIES

• Cause of Death : Drowning (A)

• Vehicle submerged in lake

Indicate the Location, Lesion, Detail (size, depth, fracture type, head injury clinical signs and neurological deficits), and Source of all injuries indicated by official sources (or from PAR or other unofficial sources if medical records and interviewee data are unavailable.)

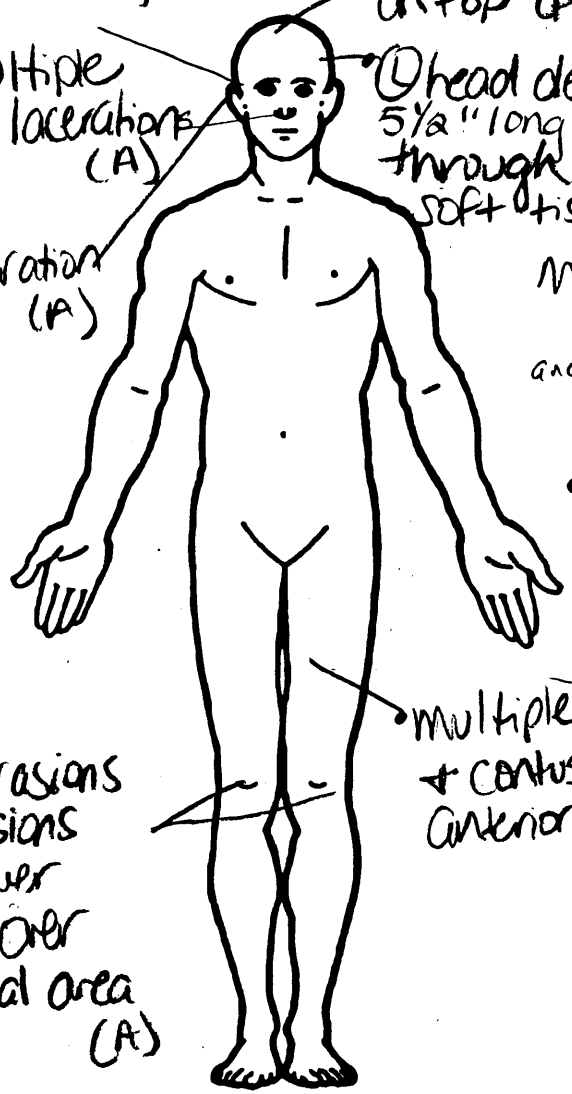

• Laceration of (R) temporal ~~lobe~~ area (A)

• (R) nose, multiple abrasions + lacerations (A)

• superior (R) ear laceration (A)

• multiple abrasions and contusions on both lower extremities over the pretibial area (A)

Abrasions + Laceration on top of head (A)

• (L) head deep laceration 5½" long extending through subscapular soft tissue (A) to calvarium

multiple subscapular contusions (A) and hemorrhages

• irregular abrasions + contusions of posterior (L) hand (A)

• multiple abrasions + contusions (L) anterior thigh (A)

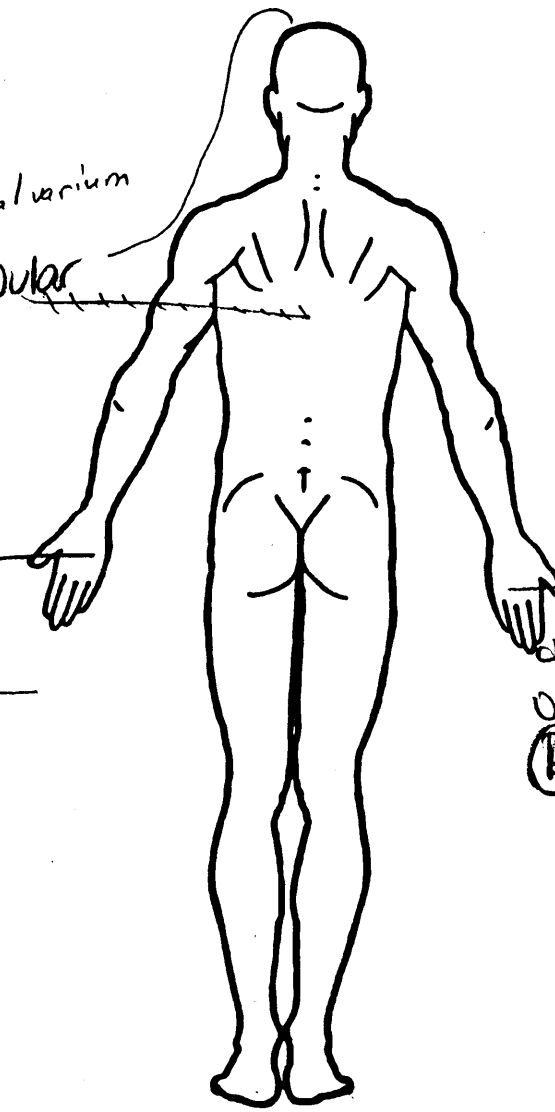

• Abrasions + lacerations of posterior (R) hand (A)

SOURCE OF INJURY DATA

OFFICIAL

(1) Autopsy records with or without hospital medical records
(2) Hospital medical records other than emergency room (e.g., dishcarge summary)
(3) Emergency room records only (including associated X-rays or other lab reports)
(4) Private physician, walk-in or emergency clinic

UNOFFICIAL

(5) Lay coroner report
(6) E.M.S. personnel
(7) Interviewee
(8) Other source (specify): _____
(9) Police

INJURY SOURCE

FRONT

(01) Windshield
(02) Mirror
(03) Sunvisor
(04) Steering wheel rim
(05) Steering wheel hub/spoke
(06) Steering wheel (combination of codes 04 and 05)
(07) Steering column, transmission selector lever, other attachment
(08) Add on equipment (e.g., CB, tape deck, air conditioner)
(09) Left instrument panel and below
(10) Center instrument panel and below
(11) Right instrument panel and below
(12) Glove compartment door
(13) Knee bolster
(14) Windshield including one or more of the following: front header, A-pillar, instrument panel, mirror, or steering assembly (driver side only)
(15) Windshield including one or more of the following: front header, A-pillar, instrument panel, or mirror (passenger side only)
(16) Other front object (specify): _____

LEFT SIDE

(20) Left side interior surface, excluding hardware or armrests
(21) Left side hardware or armrest
(22) Left A pillar
(23) Left B pillar
(24) Other left pillar (specify): _____
(25) Left side window glass or frame
(26) Left side window glass including one or more of the following: frame, window sill, A-pillar, B-pillar, or roof side rail.
(27) Other left side object (specify): _____
(28) Left side window sill

RIGHT SIDE

(30) Right side interior surface, excluding hardware or armrests
(31) Right side hardware or armrest
(32) Right A pillar
(33) Right B pillar
(34) Other right pillar (specify): _____
(35) Right side window glass or frame
(36) Right side window glass including one or more of the following: frame, window sill, A pillar, B pillar, or roof side rail.
(37) Other right side object (specify): _____
(38) Right side window sill

INTERIOR

(40) Seat, back support
(41) Belt restraint webbing/buckle
(42) Belt restraint B-pillar attachment point
(43) Other restraint system component (specify): _____
(44) Head restraint system
(45) Air bag
(46) Other occupants (specify): _____
(47) Interior loose objects
(48) Child safety seat (specify): _____
(49) Other interior object (specify): _____

ROOF

(50) Front header
(51) Rear header
(52) Roof left side rail
(53) Roof right side rail
(54) Roof or convertible top

FLOOR

(56) Floor (including toe pan)
(57) Floor or console mounted transmission lever, including console
(58) Parking brake handle
(59) Foot controls including parking brake

REAR

(60) Backlight (rear window)
(61) Backlight storage rack, door, etc.
(62) Other rear object (specify): _____

EXTERIOR of OCCUPANT'S VEHICLE

(65) Hood
(66) Outside hardware (e.g., outside mirror, antenna)
(67) Other exterior surface or tires (specify): _____
(68) Unknown exterior objects

EXTERIOR OF OTHER MOTOR VEHICLE

(70) Front bumper
(71) Hood edge
(72) Other front of vehicle (specify): _____
(73) Hood
(74) Hood ornament
(75) Windshield, roof rail, A-pillar
(76) Side surface
(77) Side mirrors
(78) Other side protrusions (specify) _____
(79) Rear surface
(80) Undercarriage
(81) Tires and wheels
(82) Other exterior of other motor vehicle (specify): _____
(83) Unknown exterior of other motor vehicle

OTHER VEHICLE OR OBJECT IN THE ENVIRONMENT

(84) Ground
(85) Other vehicle or object (specify) _____
(86) Unknown vehicle or object

NONCONTACT INJURY

(90) Fire in vehicle
(91) Flying glass
(92) Other noncontact injury source (specify): _____
(93) Air bag exhaust gases
(97) Injured, unknown source

INJURY SOURCE CONFIDENCE LEVEL

(1) Certain
(2) Probable
(3) Possible
(9) Unknown

DIRECT/INDIRECT INJURY

(1) Direct contact injury
(2) Indirect contact injury
(3) Noncontact injury
(7) Injured, unknown source

OCCUPANT INJURY CLASSIFICATION

O.I.C. Body Region

(M) Abdomen
(Q) Ankle—foot
(A) Arm (upper)
(B) Back-thoracolumbar spine
(C) Chest
(E) Elbow
(F) Face
(R) Forearm
(H) Head—skull
(U) Injured, unknown region
(K) Knee
(L) Leg (lower)
(Y) Lower limbs(s) (whole or unknown part)
(N) Neck—cervical spine
(P) Pelvic—hip
(S) Shoulder
(T) Thigh
(X) Upper limb(s) (whole or unknown part)
(O) Whole body
(W) Wrist—hand

Aspect of Injury

(A) Anterior—front
(B) Bilateral (rib fracture only)
(C) Central
(I) Inferior—lower
(U) Injured, unknown aspect
(L) Left
(P) Posterior—back
(R) Right
(S) Superior—upper
(W) Whole region

Lesion

(A) Abrasion
(M) Amputation
(V) Avulsion
(B) Burn
(K) Concussion
(C) Contusion
(N) Crush
(G) Detachment, separation
(D) Dislocation
(F) Fracture
(Z) Fracture and dislocation
(U) Injured, unknown lesion
(L) Laceration
(O) Other
(P) Perforation, puncture
(R) Rupture
(S) Sprain
(T) Strain
(E) Total severance, transection

System/Organ

(W) All systems in region
(A) Arteries—veins
(B) Brain
(D) Digestive
(E) Ears
(Q) Eye
(H) Heart
(U) Injured, unknown system
(I) Integumentary
(J) Joints
(K) Kidneys
(L) Liver
(M) Muscles
(N) Nervous system
(P) Pulmonary—lungs
(R) Respiratory
(S) Skeletal
(C) Spinal cord
(Q) Spleen
(T) Thyroid, other endocrine gland
(V) Vertebrae

Abbreviated Injury Scale

(1) Minor injury
(2) Moderate injury
(3) Seriour injury
(4) Severe injury
(5) Critical injury
(6) Maximum (untreatable)
(7) Injured, unknown severity

OFFICIAL INJURY DATA — SKELETAL INJURIES

Restrained?

___ No

___ Yes

Blood Alcohol Level (mg/dl)

BAL = Ø

Glasgow Coma Scale Score

GCSS = ____

Units of Blood Given

Units = ____

Aterial Blood Gases

pH = __.__

PO_2 = ____

PCO_2 ____

HCO_3 ____

Indicate the Location, Lesion, Detail (size, depth, fracture type, head injury clinical signs and neurological deficits), and Source of all injuries indicated by official sources (or from PAR or other unofficial sources if medical records and interviewee data are unavailable.)

• No skull fractures

No hemorrhages into: pleural, peritoneal, or pericardial cavities

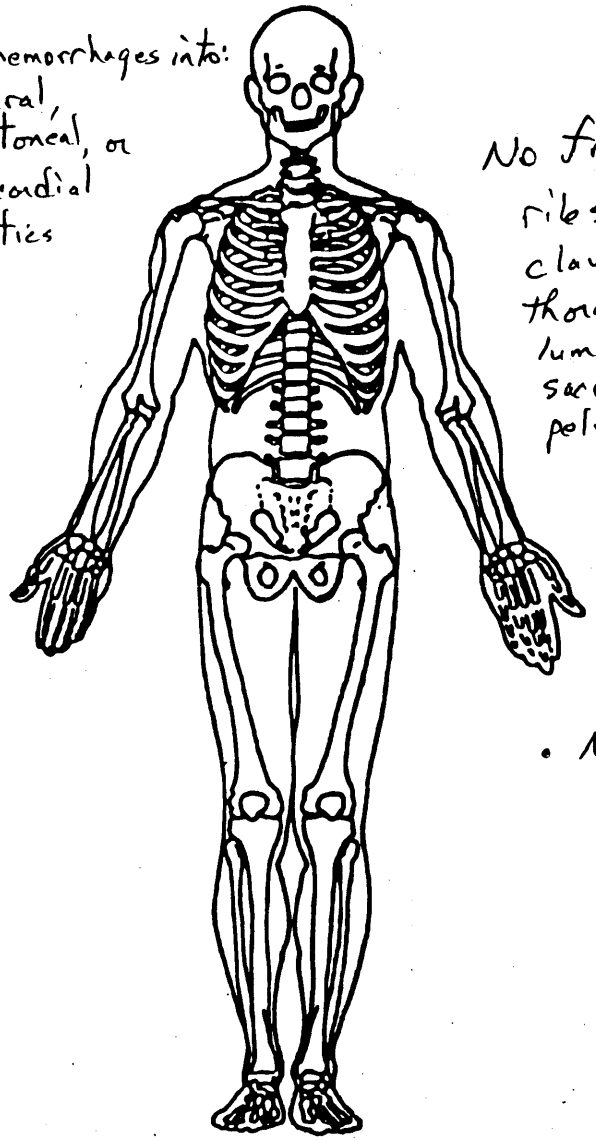

No fractures of: ribs, clavicles, thoracic spine, lumbar spine, sacral spine, pelvis

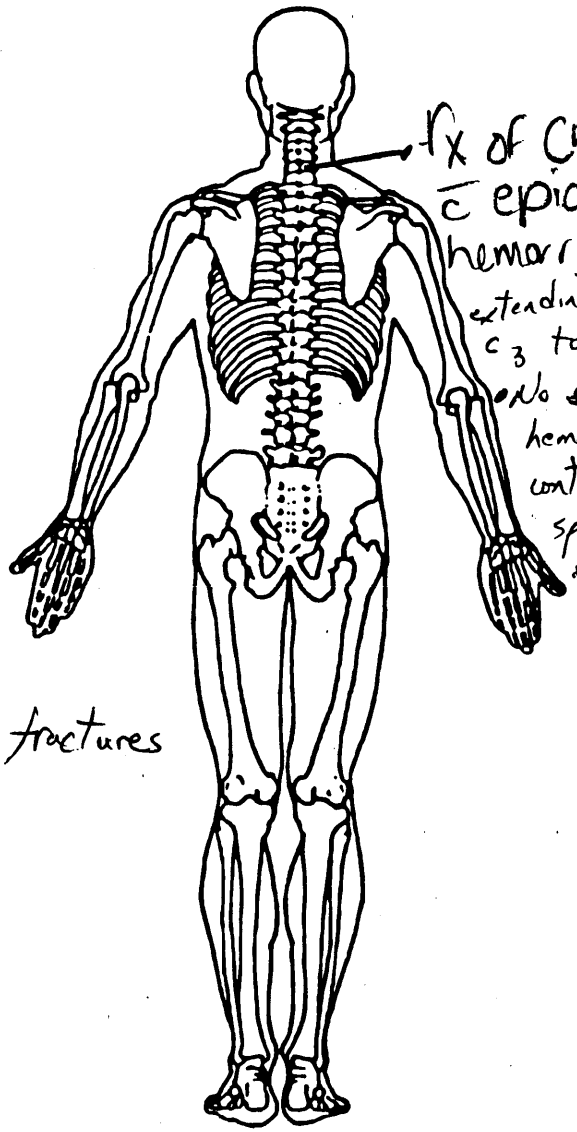

Fx of C5-6 c̄ epidural hemorrhage (A) extending from C_3 to T_1.

• No subdural hematoma or contusion of spinal cord of the neck

• No extremity fractures

49-129A
V201

OFFICIAL INJURY DATA —INTERNAL INJURIES

Indicate the Location, Lesion, Detail (size, depth, fracture type, head injury clinical signs and neurological deficits), and Source of all injuries indicated by official sources (or from PAR or other unofficial sources if medical records and interviewee data are unavailable.)

- No evidence of brain parenchymal injuries
- Dura mater and arachnoid mater are intact and without epidural, subdural, or subarachnoid hemorrhages.

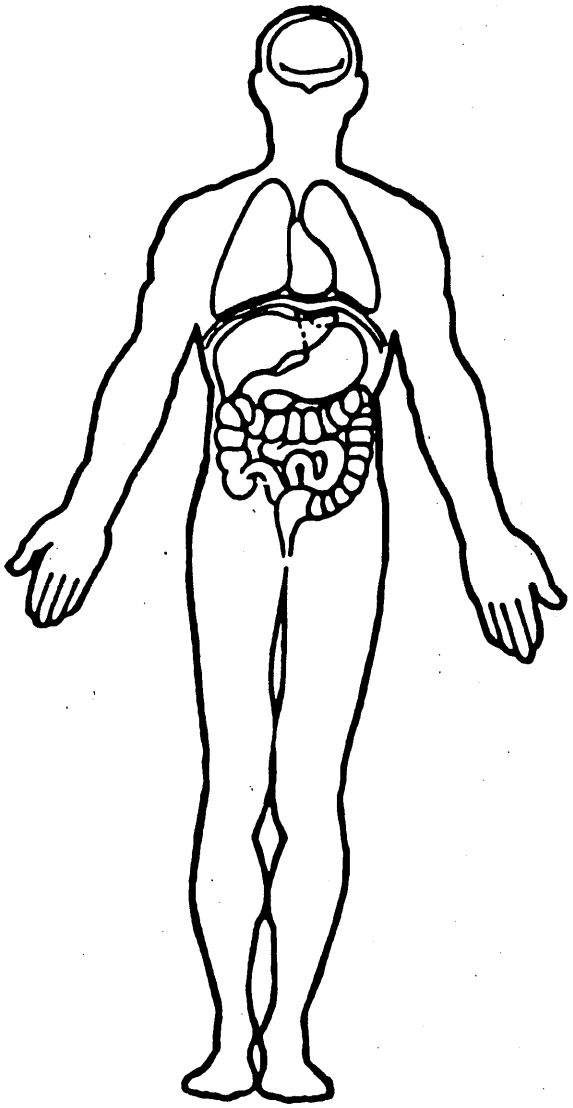

No injuries of internal organs

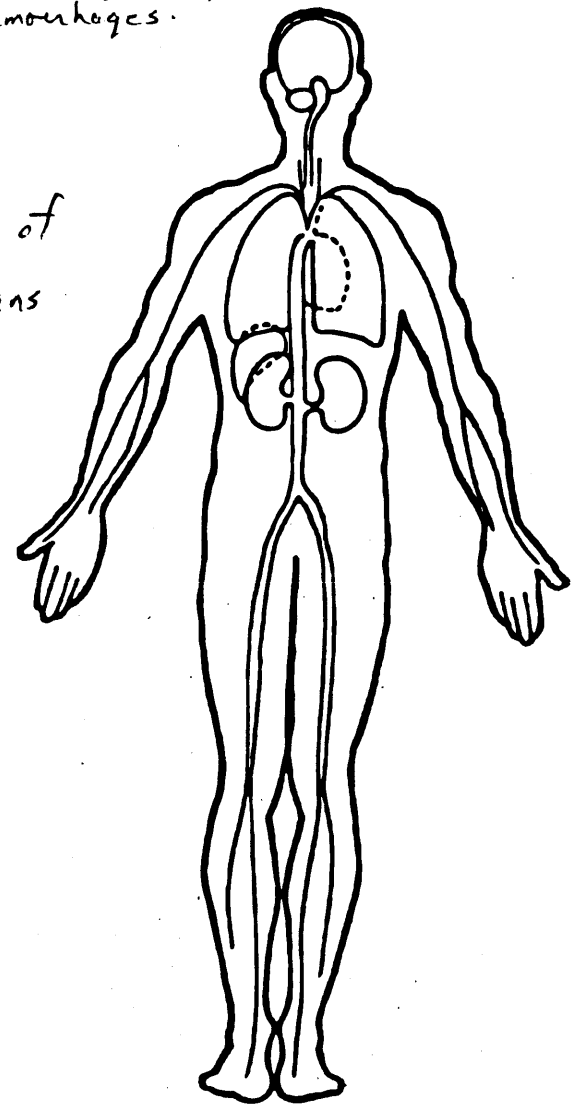

```
ZDDDDDDDDDDDDDDDDDDDDDD National Accident Sampling System DDDDDDDDDDDDDDDDDDDDD?
3 PSU49                    1992 OCCUPANT ASSESSMENT FORM                          3
3 CASE 129A                                                                       3
3 VEHICLE 02 OCCUPANT 01                                                          3
@DDDDDDDDDDDDDDDDDDDDDDDDDDDDDDDDDDDDDDDDDDDDDDDDDDDDDDDDDDDDDDDDDDDDDDDDDDDDDDDY
```

INTRA ERRORS


```
HH0191  2  If OCCUPANT POSITION OA10 equals 11 or 13 and AUTOMATIC BELT
HH0192     AVAILABILITY OA44 does not equal 2, then MANUAL BELT
HH0193     AVAILABILITY OA17 should equal 3 or 4.

HH1281  2  ******** THIS VEHICLE IS INICATED AS HAVING AN AIRBAG. *****
HH1282     ****** CHECK YOUR DATA AND IF CORRECT, NOTIFY YOUR ZONE *******
HH1283     AIR BAG AVAILABILITY/FUNCTION OA21 equals 1-3.

HH2001  1  If AIR BAG FUNCTION OA21 equals 1-3, then AUTOMATIC BELT
HH2002     AVAILABILITY OA44 should equal 0.
```

F3 Fix Errors F4 Print Errors PGUP/PGDN View other pages ESC Continue

Zone 3
[redacted]93 ②

```
49129A00000011[redacted]925.0300000000000219250000004[redacted]92[redacted]93          [redacted]92005761000
003325000019155
49129A00010012[redacted]925.0310000000000103F56000
49129A00020012[redacted]925.0310000000000103902049
49129A00030012[redacted]925.0310000000000204F56000
49129A00040012[redacted]925.0310000000000204931 00N
49129A01000021       5.03 0000000008022010022J37AA2510[redacted]    19919745990610101032
99000000998998699 99 999999010
49129A01000022       5.03 00000000000100000000000000000[redacted]0000000011099
49129A01000031       5.03 000000000015612FYEW0402029999999906433251715 1004-012
                 0110610001
49129A01000041       5.03 00000000013210006000026000008000000001200000013000000
49129A01000042       5.03 0000000002128332107331 10212
              1            000134080
49129A01010051       5.03 00000000024199999111900000404110004307100000000000000000
099000000000000000100100
49129A02000021       5.03 0000000009119003041G6CD54B M4[redacted]19979745999810101036
99000900999999699 99 999999001
49129A02000022       5.03 00000000000100000000000000000[redacted]10999999016199
49129A02010051       5.03 0000000005617020011190000099999139099990000000000004100
062019900009733999997997
49129A99999999900000000000000000000000000000000000000000000000000000000000000000000
00000000000000
```

INTERIOR VEHICLE Vehicle: 1

INTRA ERRORS

```
CC0531   2   ****** THIS CASE SHOWS A DOOR OR HATCH OR GATE OPENING ******
CC0532       ****** CHECK YOUR DATA AND IF CORRECT, NOTIFY YOUR ZONE ******
CC0533       DOOR LEFT FRONT IV05 equals 2 or IV06 equals 2 or IV07 equals 2
CC0534       or IV08 equals 2 or IV09 equals 2.
```

GENERAL VEHICLE Vehicle: 2

INTRA ERRORS

```
GG0421   2   If ROLLOVER GV24 equals 1-9, then BASIS FOR DELTA V GV29 should
GG0422       equal 4 or 5.

GG0741   2   If MODEL YEAR GV04 equals 81-98, then VIN GV08(9) should equal
GG0742       0-9 or X.

GG0921   2   If MODEL YEAR GV04 equals 81-98, then VIN GV08 should satisfy
GG0922       the check character formula (see Table 12).
```

BEST AVAILABLE COPY

INTRA ERRORS

HH0191 HH0192 HH0193	2	If OCCUPANT POSITION OA10 equals 11 or 13 and AUTOMATIC BELT AVAILABILITY OA44 does not equal 2, then MANUAL BELT AVAILABILITY OA17 should equal 3 or 4.
HH1281 HH1282 HH1283	2	******** THIS VEHICLE IS INICATED AS HAVING AN AIRBAG. ***** ****** CHECK YOUR DATA AND IF CORRECT, NOTIFY YOUR ZONE ******* AIR BAG AVAILABILITY/FUNCTION OA21 equals 1-3.
HH2001 HH2002	1	If AIR BAG FUNCTION OA21 equals 1-3, then AUTOMATIC BELT AVAILABILITY OA44 should equal 0.

INTER ERRORS

AG0031 AG0032	2	If ACCIDENT TYPE GV15 equals 01-16, then VEHICLE FORMS AC03 should equal 01. GV=01

PSU49
CASE 129A
CURRENT VERSION: 5.03

ERROR SUMMARY SCREEN

FORM NAME	NUMBER OF DOLLAR SIGNS	NUMBER OF LEVEL 1 ERRORS	NUMBER OF LEVEL 2 ERRORS	VERSION NUMBER CONSISTENT
Accident	0	0	0	N
General Vehicle	0	0	3	N
Vehicle Exterior	0	0	0	N
Vehicle Interior	0	0	1	N
Occupant Assesment	0	1	2	N
Occupant Interior	0	0	0	N
Total Inter Errors		0	1	
Total Case Errors	0	1	7	

Zone 3
[redacted]-93 ①

```
49129A00000011[redacted]925.0300000000000219250000004[redacted]92[redacted]93          [redacted]92005761000
003325000019155
49129A00010012[redacted]925.0310000000000103F56000
49129A00020012[redacted]925.0310000000000103902049
49129A00030012[redacted]925.0310000000000204F56000
49129A00040012[redacted]925.0310000000000204931 00N
49129A01000021       5.03 0000000008022010022J37AA2[redacted]     19919745990610101032
99000000998998699 99 999999010
49129A01000022       5.03 00000000000100000000000000000[redacted]90000000011099
49129A01000031       5.03 000000000015612FYEW04020299999999064332517151004-012
                 0110610001
49129A01000041       5.03 00000000013210006000026000008000000001200000013000000
49129A01000042       5.03 0000000002128332107331102 12
              1              000134080
49129A01010051       5.03 00000000024199999111900000404110004307100000000000000000
0990000000000000000100100
49129A02000021       5.03 0000000009119003041G6CD54B0M42489081997974599981010103 6
99000900999999699 99 999999001
49129A02000022       5.03 00000000000100000000000000000750621099999901 6199
49129A02010051       5.03 00000000056170200111900000400001390999900000000000004100
062019900009700000997997
49129A99999999900000000000000000000000000000000000000000000000000000000000000000000
00000000000000
```

INTERIOR VEHICLE Vehicle: 1

INTRA ERRORS

```
CC0531   2   ****** THIS CASE SHOWS A DOOR OR HATCH OR GATE OPENING ******
CC0532       ****** CHECK YOUR DATA AND IF CORRECT, NOTIFY YOUR ZONE ******
CC0533       DOOR LEFT FRONT IV05 equals 2 or IV06 equals 2 or IV07 equals 2
CC0534       or IV08 equals 2 or IV09 equals 2.
```

GENERAL VEHICLE Vehicle: 2

INTRA ERRORS

```
GG0421   2   If ROLLOVER GV24 equals 1-9, then BASIS FOR DELTA V GV29 should
GG0422       equal 4 or 5.
```

ok

```
GG0921   2   If MODEL YEAR GV04 equals 81-98, then VIN GV08 should satisfy
GG0922       the check character formula (see Table 12).
```

VIN appears ok as coded & check digit

NASS Cdng Chg
1st Rev 3 E
2nd Rev 3 _

OCCUPANT ASSESSMENT Vehicle: 2 Occupant: 1

INTRA ERRORS

```
HH1281   2   ******** THIS VEHICLE IS INICATED AS HAVING AN AIRBAG. *****
HH1282       ****** CHECK YOUR DATA AND IF CORRECT, NOTIFY YOUR ZONE *******
HH1283       AIR BAG AVAILABILITY/FUNCTION OA21 equals 1-3.
```

INTER ERRORS

AG0031 2 If ACCIDENT TYPE GV15 equals 01-16, then VEHICLE FORMS AC03
AG0032 should equal 01. GV=01 ok as coded

GH0491 1 If MODEL YEAR GV04 equals 88-93 and BODY TYPE GV07 equals 01-09
GH0492 and OCCUPANT POSITION OA10 equals 11 and MAKE GV05 equals 18-22
GH0493 or 24 and VIN GV08(7) equals 4, then AUTOMATIC BELT AVAILABILITY
GH0494 OA44 must equal 1-4 or 9. GV=02 OA=01

PSU49
CASE 129A
CURRENT VERSION: 5.03

ERROR SUMMARY SCREEN

[redacted]/[redacted]/93

FORM NAME	NUMBER OF DOLLAR SIGNS	NUMBER OF LEVEL 1 ERRORS	NUMBER OF LEVEL 2 ERRORS	VERSION NUMBER CONSISTENT
Accident	0	0	0	N
General Vehicle	0	0	2	N
Vehicle Exterior	0	0	0	N
Vehicle Interior	0	0	1	N
Occupant Assesment	0	0	1	N
Occupant Interior	0	0	0	N
Total Inter Errors		1	1	
Total Case Errors	0	1	5	

Zone 3
[redacted]93

49129A00000011[redacted]925.0400000000000219250000004[redacted]92[redacted]93[redacted]93[redacted]92005761000
003325000019155
49129A00010012[redacted]925.0410000000000103F56000
49129A00020012[redacted]925.0410000000000103902049
49129A00030012[redacted]925.0410000000000204F56000
49129A00040012[redacted]925.0410000000000020493100N
49129A01000021 5.04 0000000008022010022J37AA25101[redacted] 19919745990610101032
99000000998998699 99 999999010
49129A01000022 5.04 0000000000010000000000000000[redacted]90000000011099
49129A01000031 5.04 000000000015612FYEW04020299999999064332517151004-012
0110610001
49129A01000041 5.04 00000000013210006000026000008000000001200000013000000
49129A01000042 5.04 000000000212833210733110212
1 000134080
49129A01010051 5.04 0000000002419999911190000040411000430710000000000000000
0990000000000000000100100
49129A02000021 5.04 0000000009119003041G6CD54B M4[redacted]19970045999810101036
99000900999999699 99 999999001
49129A02000022 5.04 0000000000010107070707070707[redacted]90999999016099
49129A02010051 5.04 0000000005617021811199999999999999799990000000000004100
062019700001899999901101
49129A02010161 5.04 0000000001HWLI1979799
49129A02010261 5.04 0000000001FCAI1979799
49129A02010361 5.04 0000000001FCLI1979799
49129A02010461 5.04 0000000001HRLE1979799
49129A02010561 5.04 0000000001KRAI1093199
49129A02010661 5.04 0000000001KRCI1093199
49129A02010761 5.04 0000000001KLAI1092199
49129A02010861 5.04 0000000001KLCI1092199
49129A02010961 5.04 0000000001HSAI1979799
49129A02011061 5.04 0000000001HLLI2979799
49129A02011161 5.04 0000000001HWCI1979799
49129A02011261 5.04 0000000001WLAI1979799
49129A02011361 5.04 0000000001WLCI1979799
49129A02011461 5.04 0000000001TLAI1043199
49129A02011561 5.04 0000000001TLCI1043199
49129A02011661 5.04 0000000001WRAI1979799
49129A02011761 5.04 0000000001WRLI1979799
49129A02011861 5.04 0000000001NPFS2979799
49129A99999999900000000000000000000000000000000000000300000000000000000010000000010000
00000000000002

INTERIOR VEHICLE Vehicle: 1

BEST AVAILABLE COPY

INTRA ERRORS

CC0531 2 ****** THIS CASE SHOWS A DOOR OR HATCH OR GATE OPENING ******
CC0532 ****** CHECK YOUR DATA AND IF CORRECT, NOTIFY YOUR ZONE ******
CC0533 DOOR LEFT FRONT IV05 equals 2 or IV06 equals 2 or IV07 equals 2
CC0534 or IV08 equals 2 or IV09 equals 2.

GENERAL VEHICLE Vehicle: 2

INTRA ERRORS

GG0741 2 If MODEL YEAR GV04 equals 81-98, then VIN GV08(9) should equal
GG0742 0-9 or X.

GG0921 2 If MODEL YEAR GV04 equals 81-98, then VIN GV08 should satisfy
GG0922 the check character formula (see Table 12).

GG0421 2 If ROLLOVER GV24 equals 1-9, then BASIS FOR DELTA V GV29 should
GG0422 equal 4 or 5.

OCCUPANT ASSESSMENT Vehicle: 2 Occupant: 1

INTRA ERRORS

HH0191 2 If OCCUPANT POSITION OA10 equals 11 or 13 and AUTOMATIC BELT
HH0192 AVAILABILITY OA44 does not equal 2, then MANUAL BELT
HH0193 AVAILABILITY OA17 should equal 3 or 4.

INTER ERRORS

AG0031 2 If ACCIDENT TYPE GV15 equals 01-16, then VEHICLE FORMS AC03
AG0032 should equal 01. GV=01

GH0181 2 If AOPS VEHICLE GV36 equals 1 and DRIVER PRESENCE GV16 does not
GH0182 equal 0, then at least one AIR BAG AVAILABILITY/FUNCTION OA21
GH0183 should equal 1-3 or AUTOMATIC BELT AVAILABILITY OA44 should
GH0184 equal 1-4. GV=02 OA=02

PSU49 ERROR SUMMARY SCREEN [redacted]/93
CASE 129A
CURRENT VERSION: 5.04

FORM NAME	NUMBER OF DOLLAR SIGNS	NUMBER OF LEVEL 1 ERRORS	NUMBER OF LEVEL 2 ERRORS	VERSION NUMBER CONSISTENT
Accident	0	0	0	Y
General Vehicle	0	0	3	Y
Vehicle Exterior	0	0	0	Y
Vehicle Interior	0	0	1	Y
Occupant Assesment	0	0	1	Y
Occupant Interior	0	0	0	Y
Total Inter Errors		0	2	
Total Case Errors	0	0	7	

MDE ERROR
G.V. 2 - #8

1 National Accident Sampling System

PSU49
CASE 129A

1992 ACCIDENT FORM

Hard Copy correct

BEST AVAILABLE COPY

IDENTIFICATION

3. Number of General Vehicle Forms Submitted 02
4. Date of Accident (Month, Day, Year) [redacted]/[redacted]/92
5. Time of Accident (military time) 1925

SPECIAL STUDIES INDICATORS

6. SS12 0 7. SS13 0 8. SS14 0 9. SS15 0 10. SS16 0

NUMBER OF EVENTS

11. Number of Recorded Events in This Accident 04

PSU49
CASE 129A

1992 ACCIDENT FORM

ACCIDENT EVENTS

Accident Sequence Number	Vehicle Number	Class of Vehicle	General Area of Damage	Veh. Num. or Obj. Cont.	Class of Vehicle	General Area of Damage
012. 01	013. 01	014. 03	015. F	016. 56	017. 00	018. 0
019. 02	020. 01	021. 03	022. 9	023. 02	024. 04	025. 9
026. 03	027. 02	028. 04	029. F	030. 56	031. 00	032. 0
033. 04	034. 02	035. 04	036. 9	037. 31	038. 00	039. N

011
INTRA ERRORS

01********** NO ERRORS **********
00

PSU49 1992 GENERAL VEHICLE FORM
CASE 129A
VEHICLE 01

VEHICLE IDENTIFICATION

4.	Model Year	80	5.	Make	22
6.	Model	010	7.	Body Type	02
8.	VIN	2J37AA2[redacted]			

OFFICIAL RECORDS

9.	Police Reported Disposition.	1	10.	Police Reported Travel Speed	99
11.	Police Rep. Alcohol Presence	1	12.	Alcohol Test Result for Driver	97

ACCIDENT RELATED

13.	Speed Limit	45	14.	Attempted Avoid. Maneuver	99
15.	Accident Type	06			

OCCUPANT RELATED

16.	Driver Presence in Vehicle	1	17.	No. Occupants This Vehicle	01
18.	No. Occupant Forms Submitted	01			

VEHICLE WEIGHT ITEMS

19.	Vehicle Curb Weight	032	20.	Vehicle Cargo Weight	99

RECONSTRUCTION DATA

21.	Towed Trailing Unit	0	22.	Trajectory Data Documented	0
23.	Post Col. Cond. of Tree/Pole	0	24.	Rollover	0

OVERRIDE/UNDERRIDE (this vehicle)

25.	Front Override/Underride	0	26.	Rear Override/Underride	0

HEADING ANGLE AT IMPACT FOR HIGHEST DELTA V

27.	Heading Angle This Vehicle	998	28.	Heading Angle Other Vehicle	998

HEADING ANGLE AT IMPACT FOR HIGHEST DELTA V (Cont.)

29.	Basis for Total Delta V	6

COMPUTER GENERATED DELTA V

30. Total Delta V	99
31. Longitudinal Component of Delta V	99
32. Lateral Component of Delta V	99
33. Energy Absorption	9999
34. Confidence in Reconstruction Program Results	0
35. Type of Vehicle Inspection	1
36. Is this an AOPS vehicle?	0

37. Police Reported Drug Presence	0
38. Police Observation/Perception Test Type for Driver	0
39. Other Drug Specimen Test Type for Driver	1

DRUG EVALUATION CLASSIFICATION / OTHER TEST RESULTS FOR DRIVER

	DEC Observation/ Perception Test Results		Specimen Test Results	
Narcotic Drug	40.	0	41.	0
Depressant Drug	42.	0	43.	0
Stimulant Drug	44.	0	45.	0
Hallucinogen Drug	46.	0	47.	0
Cannabinoid Drug	48.	0	49.	0
Phencyclidine (PCP)	50.	0	51.	0
Inhalant Drug	52.	0	53.	0
Other Drug	54.	0	55.	0

OTHER DATA

56. Driver's Zip Code	[redacted]	57. Driver's Race/Ethnic Origin	9
58. Vehicle Special Use	0		

ROLLOVER DATA

59. Rollover Initiation Type	0	60. Location of Rollover Initiation	0
61. Rollover Initiation Object Contacted	00	62. Location on Vehicle Where Initial Principal Tripping Force Applied	0
63. Direction of Initial Roll	0		

PRECRASH DATA

64. Pre-Event Movement (Prior to Recognition of Critical Event)	01	65. Initial Critical (Precrash) Event	10
66. Precrash Stability After Avoidance Maneuver	9	67. Precrash Directional Consequences Corrective Action	9

011

INTRA ERRORS

01********** NO ERRORS **********

00

PSU49
CASE 129A
VEHICLE 01

1992 EXTERIOR VEHICLE FORM

COLLISION DEFORMATION CLASSIFICATION

HIGHEST DELTA "V"

Accident Sequence Number	Object Contacted	Direction of Force	Deform. Location	Specific Longitud. or lat. Location	Specific Vertical or Lateral Location	Type of Damage Distrib.	Deform. Extent
4. 01	5. 56	6. 12	7. F	8. Y	9. E	10. W	11. 04

SECOND HIGHEST DELTA "V"

12. 02	13. 02	14. 99	15. 9	16. 9	17. 9	18. 9	19. 99

CRUSH PROFILE

HIGHEST DELTA "V"

20.	21. C1	C2	C3	C4	C5	C6	22. +/-D
L 064	33	25	17	15	10	04	-012

SECOND HIGHEST DELTA "V"

23.	24. C1	C2	C3	C4	C5	C6	25. +/-D
L							

26.	CDCS Documented but not coded	0
27.	Researchers Assess. Veh. Disp.	1
28.	Original Wheelbase	1061

29.	Multi-staged Manufactured/Certified Altered Vehicle?	0
30.	Fire Occurrence	0
31.	Origin of Fire	0
32.	Type of Fuel Tank	1

011
INTRA ERRORS

01********** NO ERRORS **********
00

PSU49
CASE 129A
VEHICLE 01

1992 INTERIOR VEHICLE FORM

INTEGRITY

4. Passenger Compartment 13

Door, Tailgate or Hatch opening

5. LF 2 6. RF 1 7. LR 0 8. RR 0 9. TG/H 0

Damage/Failure Associated with Door, Tailgate or Hatch Opening in Collision

10. LF 6 11. RF 0 12. LR 0 13. RR 0 14. TG/H 0

GLAZING

Glazing Damage

15. WS 2 16. LF 6 17. RF 0 18. LR 0 19. RR 0
20. BL 0 21. Roof 0 22. Other 8

Glazing Damage from Occupant Contact

23. WS 0 24. LF 0 25. RF 0 26. LR 0 27. RR 0
28. BL 0 29. Roof 0 30. Other 0

GLAZING (Cont.)

Type of Window/Windshield Glazing

31. WS 1	32. LF 2	33. RF 0	34. LR 0	35. RR 0
36. BL 0	37. Roof 0	38. Other 0		

Window Precrash Glazing Status

39. WS 1	40. LF 3	41. RF 0	42. LR 0	43. RR 0
44. BL 0	45. Roof 0	46. Other 0		

OCCUPANT AREA INTRUSION

Location of Intrusion	Intruding Component	Magnitude of Intrusion	Dominant Crush Direction
47. 21	48. 28	49. 3	50. 3
51. 21	52. 07	53. 3	54. 3
55. 11	56. 02	57. 1	58. 2
59.	60.	61.	62.
63.	64.	65.	66.
67.	68.	69.	70.
71.	72.	73.	74.
75.	76.	77.	78.
79.	80.	81.	82.
83.	84.	85.	86.

STEERING COLUMN

87. Steering Column Type	1	88. Blank	
89. Blank		90. Blank	
91. Blank		92. Steering Rim/Spoke Deform	0
93. Location of Rim/Spoke Deform	00		

INSTRUMENT PANEL

94. Odometer Reading	134,000	95. Instrument Panel Damage	0
96. Knee Bolsters Deformed	8	97. Glove Door Open	0

011
INTRA ERRORS

D3

```
                0CC0531  2  ****** THIS CASE SHOWS A DOOR OR HATCH OR GATE OPENI
G ******         CC0532     ****** CHECK YOUR DATA AND IF CORRECT, NOTIFY YOUR Z
NE ******        CC0533     DOOR LEFT FRONT IV05 equals 2 or IV06 equals 2 or IV
7 equals 2       CC0534     or IV08 equals 2 or IV09 equals 2.
```

0

PSU49 1992 OCCUPANT ASSESSMENT FORM
CASE 129A
VEHICLE 01 OCCUPANT 01

OCCUPANT'S CHARACTERISTICS

5. Age	24	6. Sex	1	7. Height	99	8. Weight	999
9. Role	1	10. Seat Position	11	11. Posture	9		

EJECTION/ENTRAPMENT

12. Ejection	0	13. Ejection Area	0	14. Ejection Medium	0
15. Medium Status	0	16. Entrapment	0		

RESTRAINT SYSTEM AND SEAT EVALUATION

17. Belt System Availability	4	18. Belt System Use	04
19. Proper Use of Belt	1	20. Belt Failure Modes During Impact	1
21. Air Bag Availability	0	22. Air Bag Deployment	0
23. Did Air Bag Fail?	0	24. Police Reported Restraint Use	4
25. Head Restraint Type/Damage by Occupant at this Position	3	26. Seat Type	07
27. Seat Performance	1		

CHILD SAFETY SEAT

28. Child/Safety Seat Make/Model	000
29. Type of Child Safety Seat	0
30. Orientation	00
31. Harness	00
32. Shield	00
33. Tether	00

INJURY CONSEQUENCES

34. Severity (Police Rating)	0	35. Treatment - Mortality	0
36. Type of Med. Facility (Initial)	0	37. Hospital Stay	00
38. Working Days Lost	99	39. Time to Death	00

MEDICALLY REPORTED CAUSE OF DEATH

40. Cause #1 00
41. Cause #2 00
42. Cause #3 00
43. Number of Recorded Injuries 00

AUTOMATIC BELT SYSTEM

44. Automatic (Passive) Belt System Availability/Function	0
45. Automatic (Passive) Belt System Use	0
46. Automatic (Passive) Belt System Type	0
47. Proper Use of Automatic (Passive) Belt System	0
48. Automatic (Passive) Belt System Failure Mode	0
49. Seat Orientation (this Occupant Position)	1

TRAUMA DATA

50. Glasgow Coma Scale (GCS) Score	00
51. Was the Occupant Given Blood?	1
52. Arterial Blood Gases (ABG) - HCO3	00

011
INTRA ERRORS

01********** NO ERRORS **********
00

PSU49 1992 GENERAL VEHICLE FORM
CASE 129A
VEHICLE 02

VEHICLE IDENTIFICATION

4.	Model Year	91	5.	Make	19
6.	Model	003	7.	Body Type	04
8.	VIN	99999999999999999 [redacted] 166CD54B0M4			

OFFICIAL RECORDS

9. Police Reported Disposition	1	10. Police Reported Travel Speed	99
11. Police Rep. Alcohol Presence	7	12. Alcohol Test Result for Driver	97

ACCIDENT RELATED

13. Speed Limit	45	14. Attempted Avoid. Maneuver	99
15. Accident Type	98		

OCCUPANT RELATED

16. Driver Presence in Vehicle	1	17. No. Occupants This Vehicle	01
18. No. Occupant Forms Submitted	01		

VEHICLE WEIGHT ITEMS

19. Vehicle Curb Weight	036	20. Vehicle Cargo Weight	99

RECONSTRUCTION DATA

21. Towed Trailing Unit	0	22. Trajectory Data Documented	0
23. Post Col. Cond. of Tree/Pole	0	24. Rollover	9

OVERRIDE/UNDERRIDE (this vehicle)

25. Front Override/Underride	0	26. Rear Override/Underride	0

HEADING ANGLE AT IMPACT FOR HIGHEST DELTA V

27. Heading Angle This Vehicle	999	28. Heading Angle Other Vehicle	999

HEADING ANGLE AT IMPACT FOR HIGHEST DELTA V (Cont.)

29. Basis for Total Delta V 6

COMPUTER GENERATED DELTA V

30. Total Delta V	99
31. Longitudinal Component of Delta V	99
32. Lateral Component of Delta V	99
33. Energy Absorption	9999
34. Confidence in Reconstruction Program Results	0
35. Type of Vehicle Inspection	0
36. Is this an AOPS vehicle?	1
37. Police Reported Drug Presence	0
38. Police Observation/Perception Test Type for Driver	0
39. Other Drug Specimen Test Type for Driver	1

DRUG EVALUATION CLASSIFICATION / OTHER TEST RESULTS FOR DRIVER

	DEC Observation/ Perception Test Results		Specimen Test Results	
Narcotic Drug	40.	0	41.	0
Depressant Drug	42.	0	43.	0
Stimulant Drug	44.	0	45.	0
Hallucinogen Drug	46.	0	47.	0
Cannabinoid Drug	48.	0	49.	0
Phencyclidine (PCP)	50.	0	51.	0
Inhalant Drug	52.	0	53.	0
Other Drug	54.	0	55.	0

OTHER DATA

56. Driver's Zip Code	[redacted]	57. Driver's Race/Ethnic Origin	1
58. Vehicle Special Use	0		

ROLLOVER DATA

59. Rollover Initiation Type	9	60. Location of Rollover Initiation	9
61. Rollover Initiation Object Contacted	99	62. Location on Vehicle Where Initial Principal Tripping Force Applied	9
63. Direction of Initial Roll	9		

PRECRASH DATA

64. Pre-Event Movement (Prior to Recognition of Critical Event)	01	65. Initial Critical (Precrash) Event	61
66. Precrash Stability After Avoidance Maneuver	9	67. Precrash Directional Consequences Corrective Action	9

011

INTRA ERRORS

OGG0421 2 If ROLLOVER GV24 equals 1-9, then BASIS FOR DELTA V G
V29 should GG0422 equal 4 or 5.

0

PSU49 1992 OCCUPANT ASSESSMENT FORM
CASE 129A
VEHICLE 02 OCCUPANT 01

OCCUPANT'S CHARACTERISTICS

5. Age	56	6. Sex	1	7. Height	70	8. Weight	200
9. Role	1	10. Seat Position	11	11. Posture	9		

EJECTION/ENTRAPMENT

12. Ejection	0	13. Ejection Area	0	14. Ejection Medium	0
15. Medium Status	0	16. Entrapment	0		

RESTRAINT SYSTEM AND SEAT EVALUATION

17. Belt System Availability	4	18. Belt System Use	00
19. Proper Use of Belt	0	20. Belt Failure Modes During Impact	0
21. Air Bag Availability	1	22. Air Bag Deployment	3
23. Did Air Bag Fail?	9	24. Police Reported Restraint Use	0
25. Head Restraint Type/Damage by Occupant at this Position	9	26. Seat Type	99
27. Seat Performance	9		

CHILD SAFETY SEAT

28. Child/Safety Seat Make/Model	000
29. Type of Child Safety Seat	0
30. Orientation	00
31. Harness	00
32. Shield	00
33. Tether	00

INJURY CONSEQUENCES

34. Severity (Police Rating)	4	35. Treatment - Mortality	1
36. Type of Med. Facility (Initial)	0	37. Hospital Stay	00
38. Working Days Lost	62	39. Time to Death	01

MEDICALLY REPORTED CAUSE OF DEATH

40. Cause #1 99
41. Cause #2 00
42. Cause #3 00
43. Number of Recorded Injuries 97

AUTOMATIC BELT SYSTEM

44. Automatic (Passive) Belt System Availability/Function	0
45. Automatic (Passive) Belt System Use	0
46. Automatic (Passive) Belt System Type	0
47. Proper Use of Automatic (Passive) Belt System	0
48. Automatic (Passive) Belt System Failure Mode	0
49. Seat Orientation (this Occupant Position)	9

TRAUMA DATA

50. Glasgow Coma Scale (GCS) Score	97
51. Was the Occupant Given Blood?	9
52. Arterial Blood Gases (ABG) - HCO3	97

011

INTRA ERRORS

	0HH1281	2	******** THIS VEHICLE IS INICATED AS HAVING AN AIRBAG
. *****	HH1282		****** CHECK YOUR DATA AND IF CORRECT, NOTIFY YOUR ZO
NE *******	HH1283		AIR BAG AVAILABILITY/FUNCTION 0A21 equals 1-3.

0

1

INTER ERRORS

	0AG0031	2	If ACCIDENT TYPE GV15 equals 01-16, then VEHICLE FORMS
AC03	AG0032		should equal 01. GV=01

National Accident Sampling System
ERROR SUMMARY SCREEN

PSU49
CASE 129A
CURRENT VERSION: 6.01

[redacted] 93

FORM NAME	NUMBER OF DOLLAR SIGNS	NUMBER OF LEVEL 1 ERRORS	NUMBER OF LEVEL 2 ERRORS	VERSION NUMBER CONSISTENT
Accident	0	0	0	Y
General Vehicle	0	0	1	Y
Vehicle Exterior	0	0	0	Y
Vehicle Interior	0	0	1	Y
Occupant Assesment	0	0	1	Y
Occupant Interior	0	0	0	Y
Total Inter Errors		0	1	
Total Case Errors	0	0	4	

US Department of Transportation
National Highway Traffic Safety Administration

SLIDE INDEX

NATIONAL ACCIDENT SAMPLING SYSTEM
CRASHWORTHINESS DATA SYSTEM

Primary Sampling Unit Number 4 9 | Case Number—Stratum 1 2 9 A

Slide No.	Vehicle No.	Direction of Picture	Description of Slide Subject Matter
* Note -	Scene occured where there is construction taking place and it appears that temporary barricades have been moved since the accident took place.		
1-3	01	East	Approach and impact with temporary barrier.
4	01	East	V1 impact with V2 -- this is according to the police report; there is no evidence on vehicle one that it actually contacted V2.
5	02	East	V2 approaching gaurd rail by the bridge.
6	02	East	V2 went through the gaurd rail and over the cliff and into the water.
7	01&02	West	Lookback at approach and impacts.
8-10	01		Exterior photographs with contour gauge.
11	01		Exterior photograph.
12-14	01		Photographs of hinge and latch failures.
15-21	01		Exterior photographs.
22-32	01		Interior photographs.
~~33~~			~~Serial No. (windshield)~~
~~34~~			~~Tag (back)~~

HS Form 434B (1/91)

PSU 49-129A (1992) #1

PSU 49-129A (1992) #2

PSU 49-129A (1992) #3

PSU 49-129A (1992) #4

PSU 49-129A (1992) #5

PSU 49-129A (1992) #6

PSU 49-129A (1992) #7

PSU 49-129A (1992) #8

PSU 49-129A (1992) #9
Best Available

PSU 49-129A (1992) #10

PSU 49-129A (1992) #11

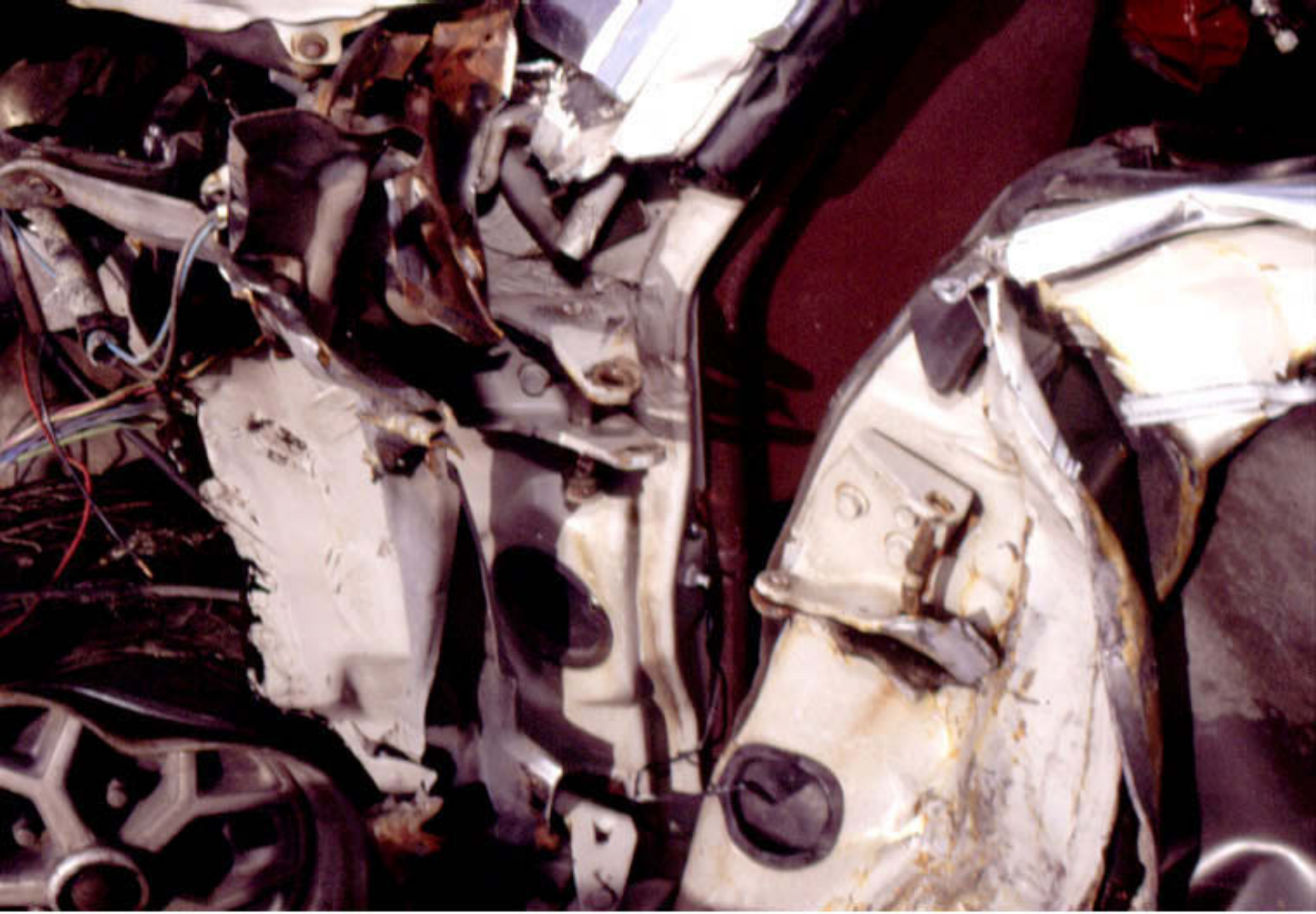

PSU 49-129A (1992) #12

PSU 49-129A (1992) #13
Best Available

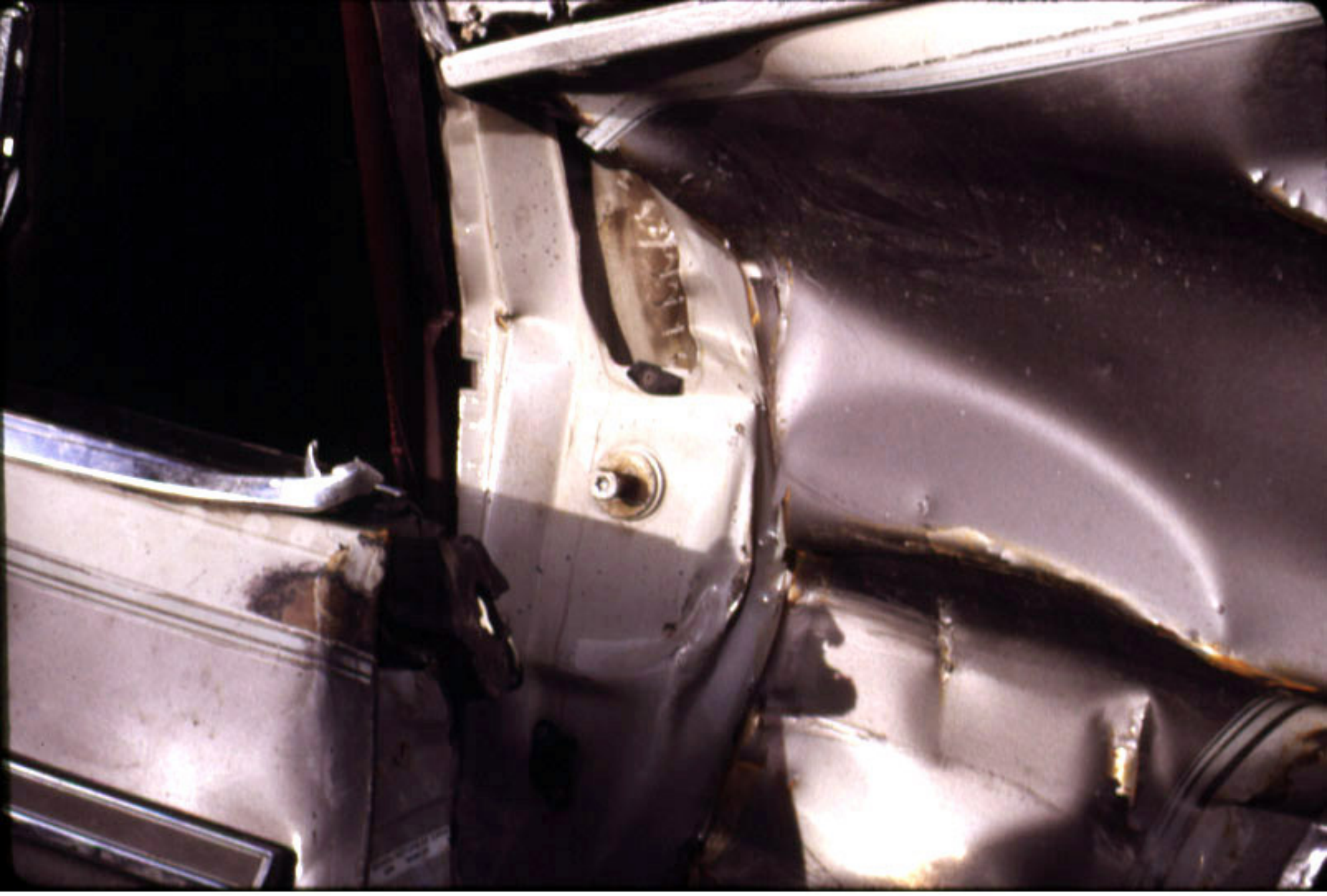

PSU 49-129A (1992) #14

PSU 49-129A (1992) #15

PSU 49-129A (1992) #16

PSU 49-129A (1992) #17

PSU 49-129A (1992) #18

PSU 49-129A (1992) #19

PSU 49-129A (1992) #20

PSU 49-129A (1992) #21

PSU 49-129A (1992) #22

PSU 49-129A (1992) #23

PSU 49-129A (1992) #24

PSU 49-129A (1992) #25

PSU 49-129A (1992) #26

PSU 49-129A (1992) #27

PSU 49-129A (1992) #28

PSU 49-129A (1992) #29

PSU 49-129A (1992) #30

PSU 49-129A (1992) #31

PSU 49-129A (1992) #32