400 Seventh Street, S.W.
Washington, D.C. 20590

U.S. Department
of Transportation

**National Highway
Traffic Safety
Administration**

Dear Crash Data Researchers/Users:

Thank you for choosing crash data from the National Highway Traffic Safety Administration (NHTSA) for your research or other use. The information contained in this motor vehicle crash report is collected, maintained and distributed in accordance with Public Law 89-564. In accordance with this Public Law, NHTSA is required not to release any case information until completion of quality control procedures. These procedures include a review of the case material to extract all names, licenses and registration numbers, non-coded interview material, non-research related researcher comments in the margins, non-factual data, and the production number portion of the vehicle identification number (VIN).

If you requested NHTSA to query its database files in order to identify a specific crash, then that query was made using non-personal descriptors you provided for use in our search. This motor vehicle crash may have been identified from a data search and matches the general, non-personal descriptors you provided, but we cannot confirm that this is the specific crash report you requested.

If you have any questions with regard to the above procedures, please contact the Field Operations Branch, Crash Investigation Division, National Center for Statistics and Analysis at 202-366-4820. Again, please be advised that we cannot confirm that this is the case that you have specifically requested nor can we certify the information to be correct.

*** *** ***

U.S. Department of Transportation

National Highway Traffic Safety Administration

CASE SUMMARY

NATIONAL ACCIDENT SAMPLING SYSTEM
CRASHWORTHINESS DATA SYSTEM

PSU 79 CASE NO. 072F TYPE OF ACCIDENT Car/car - head-on

A. DESCRIPTION OF THE ACCIDENT SEQUENCE AND ACCIDENT PECULIARITIES

(Provide a summary of the accident sequence as well as any particular event of the accident that is noteworthy. Injury mechanism and vehicle crashworthiness is the focus, not driver culpability. Do not include any personal identifiers.)

This collision occurred on a dry, asphalt roadway. V-1 was travelling east in the #3 eastbound lane of a 7-lane, undivided highway, ~~at an unknown rate of speed~~. V-2 was travelling west on the same roadway as V-1, ~~at an unknown rate of speed~~ in the westbound, left-turn lane, at the edge of an intersection. ~~For an unknown reason,~~ V-1 crossed into the westbound left-turn lane, and the front right of V-1 impacted the front ~~left~~ right of V-2. Following impact #1, V-1 rolled onto its left side, ~~rotating an unknown number of turns~~. Both V-1 and V-2 were towed due to damage. Both drivers suffered B-type injuries, but only the driver of V-1 was transported for medical treatment.

B. VEHICLE PROFILE(S)

Vehicle No.	Class of Vehicle	Year/Make/Model	Most Severe Damage Based on Vehicle Inspection		Component Failure
			Damage Plane	Severity Description	
01	compact	87/Nissan/Maxima 2-door	front	unknown	unknown
02	full-size	76/Chevrolet/ Nova, 2-door	front	moderate	none

DO NOT SANITIZE THIS FORM

C. PERSON PROFILE(S)

Vehicle No.	Person Role	Seat Position	Restraint Use	Most Severe Injury (TO BE COMPLETED BY ZONE CENTER)			
				Body Region	Injury Type	AIS	Injury Source
01	Driver	front left	unknown	injured,	details unknown		
02	Driver	front left	lap& ~~shoulder~~ Not used	injured	details unknown		

Body Region

Abdomen
Ankle—foot
Arm (upper)
Back-thoracolumbar spine
Brain
Chest
Ears
Eye
Elbow
Face
Forearm
Head—skull
Heart
Kidneys
Knee
Leg (lower)
Liver
Lower limbs(s) (whole or unknown part)
Mouth
Neck—cervical spine
Nose
Pelvic—hip
Pulmonary—lungs
Shoulder
Spleen
Thigh
Thyroid, other endocrine gland
Upper limb(s) (whole or unknown part)
Vertebrae
Whole body
Wrist—hand

Injury Type

Abrasion
Amputation
Avulsion
Burn
Concussion
Contusion
Crush
Detachment, separation
Dislocation
Fracture
Fracture and dislocation
Laceration
Other
Perforation, puncture
Rupture
Sprain
Strain
Total severance, transection
Unknown

Abbreviated Injury Scale

(1) Minor injury
(2) Moderate injury
(3) Serious injury
(4) Severe injury
(5) Critical injury
(6) Maximum (untreatable)
(7) Injured, unknown severity

DO NOT SANITIZE THIS FORM

U.S. Department of Transportation
National Highway Traffic Safety Administration

ACCIDENT COLLISION DIAGRAM

NATIONAL ACCIDENT SAMPLING SYSTEM
CRASHWORTHINESS DATA SYSTEM

PSU No. 79 Case Number—Stratum 072F

Indicate North

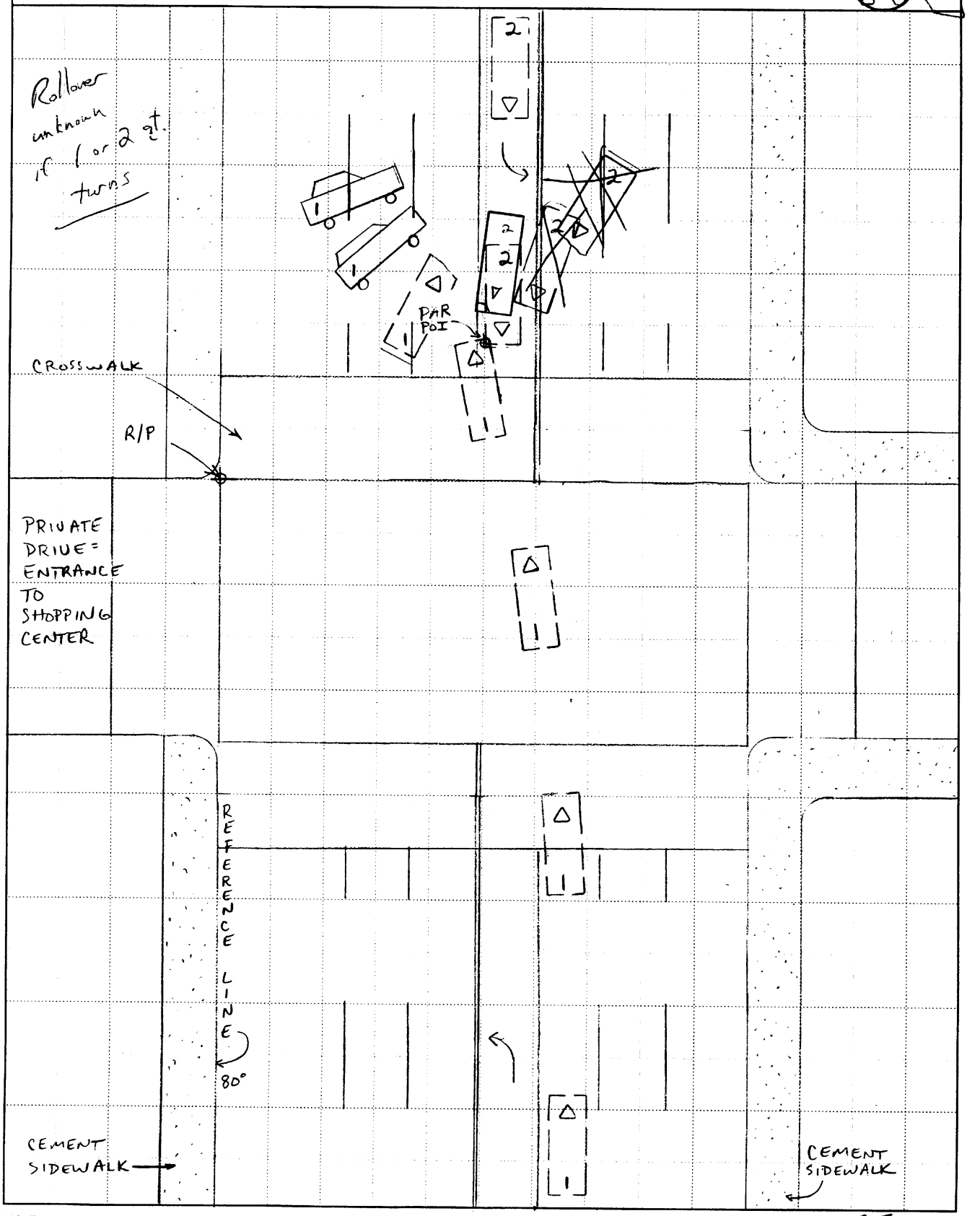

HS Form 431B (1/94)

Scale: 1 centimeter = 2.5 meters

U.S. Department of Transportation
National Highway Traffic Safety Administration

ACCIDENT COLLISION DIAGRAM

BEST AVAILABLE

[redacted]94,

NATIONAL ACCIDENT SAMPLING SYSTEM
CRASHWORTHINESS DATA SYSTEM

PSU No. 79 Case Number—Stratum 072F

Indicate North

Posted Speed limit =

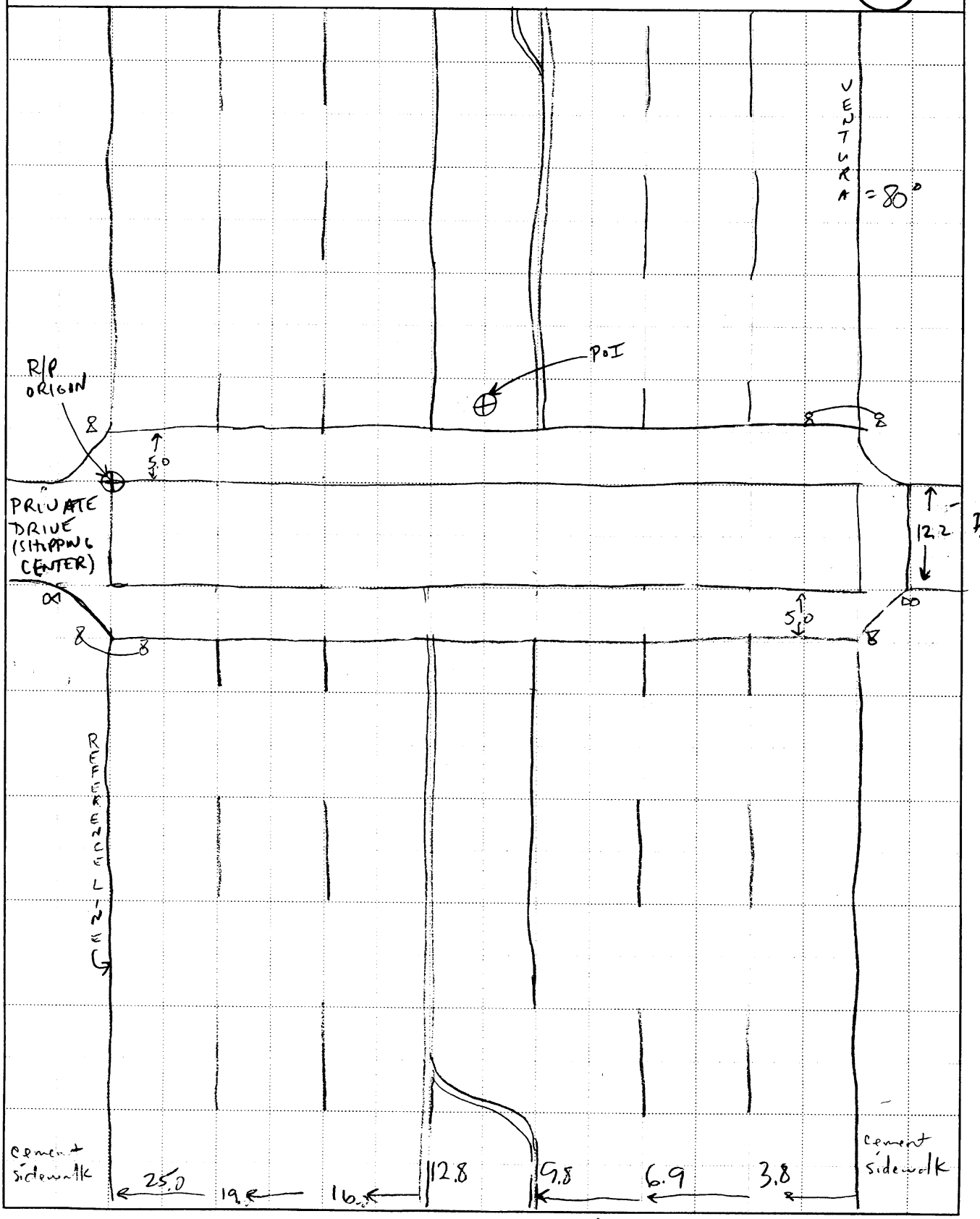

HS Form 431B (1/94)

use second R/P photograph!

Scale: 1 centimeter = _____ meters

R/P, R/L.

Reference Line, Reference Point

Photo list

V1 Approach

1a, b. right travel lane, left. before cross-1
2 crosswalk 1
3 crosswalk 2
4. POI (V_1 & V_2)
5. POI look back.
6. FRP from POI
7. FRP look back. → 8. Shot perp. to FRP : LA mailbox

V_2

1 Entrance
2 Tree/meter
3 Researcher car
4. POI
5. POI look back.
6. FRP from POI → (corner to mailboxes)
7. FRP look back. → 8. shot perp to FRP

R/L, RP.

Lane widths?

01	compact	87 NISSAN MAXIMA 2-DOOR	F	moderate	none	
02	intermediate	76 CHEVROLET NOVA 2-DOOR	F	unknown	none.	

01	Driver	front left	large sunlider
02	Driver	front left	unknown

U.S. Department of Transportation
National Highway Traffic Safety Administration

ACCIDENT COLLISION MEASUREMENT TABLE

NATIONAL ACCIDENT SAMPLING SYSTEM
CRASHWORTHINESS DATA SYSTEM

Primary Sampling Unit Number 79 Case Number—Stratum 072F

ACCIDENT COLLISION DIAGRAM

LEVEL I
PHYSICAL EVIDENCE ABSENT

To be accomplished when there is no physical evidence present at the scene:

* approximate vehicle orientation at impact and final rest
* applicable road/roadway delineation (e.g., curbs/edge lines, lane markings, median markings, pavement markings, etc.)
* applicable traffic controls (e.g., speed limit)
* north arrow placed on diagram
* sketch required

LEVEL II
PHYSICAL EVIDENCE PRESENT

In addition to the level I tasks noted above, the following must be accomplished when physical evidence is present:

* document reference point and reference line relative to physical features present at the scene
* scaled documentation of all accident induced physical evidence
* scaled documentation of all roadside objects contacted
* roadway surface type and condition of applicable roadways
* grade measurements for all applicable roadways and at location of rollover initiation
* scaled representations of the vehicle(s) at pre-impact, impact, and final rest based upon either:
  a) physical evidence, or
  b) reconstructed accident dynamics

CRASH DATA

	VEH. #1	VEH. #2	VEH. #3
Heading Angle	070°	260°	
Surface Type	ASPHALT		
Surface Condition	WORN		
Grade (v/h) Measurement (between impact and final rest)	LEVEL		
Grade (v/h) Measurement (at location of rollover initiation)	LEVEL		

Reference Point: Intersect east curb edge of [redacted] with north curb edge of [redacted]

Reference line: north curb edge of [redacted] Blvd.

Item	Distance and Direction from Reference Point	Distance and Direction from Reference Line
Origin	0	0
This is a Level I Scene.		

HS Form 431A (1/94)

Item	Distance and Direction from Reference Point	Distance and Direction from Reference Line

U.S. Department of Transportation
National Highway Traffic Safety Administration

ACCIDENT FORM

NATIONAL ACCIDENT SAMPLING SYSTEM
CRASHWORTHINESS DATA SYSTEM

1. Primary Sampling Unit Number: 79
2. Case Number - Stratum: 072F

IDENTIFICATION

3. Number of General Vehicle Forms Submitted: 02
4. Date of Accident (Month,Day,Year): [redacted] 94
5. Time of Accident: 0755

Code reported military time of accident.

NOTE: Midnight = 2400
Unknown = 9999

SPECIAL STUDIES - INDICATORS

Check (✓) each special study (SS14-SS18 below) that has been completed; code 1 for the checked special studies and 0 for the special studies not checked.

6. ___SS15 Administrative Use: 0
7. ___SS16 Pedestrian Crash Data Study: 0
8. ___SS17 Impact Fires: 0
9. ___SS18 _____: 0
10. ___SS19 _____: 0

NUMBER OF EVENTS

11. Number of Recorded Events in This Accident: 02

Code the number of events which occurred in this accident.

ACCIDENT EVENTS

For each event that occurred in the accident, code the lowest numbered vehicle in the left columns and the other involved vehicle or object on the right.

Accident Event Sequence Number	Vehicle Number	Class Of Vehicle	General Area of Damage	Vehicle Number or Object Contacted	Class Of Vehicle	General Area of Damage
12. 01	13. 01	14. 02	15. F	16. 02	17. 04	18. F
19. 02	20. 01	21. 02	22. L	23. 31	24. 00	25. N
26. 03	27.	28.	29.	30.	31.	32.
33. 04	34.	35.	36.	37.	38.	39.
40. 05	41.	42.	43.	44.	45.	46.

IF GREATER THAN FIVE EVENTS, CONTINUE CODING ON THE ACCIDENT EVENT SUPPLEMENT

CODES FOR CLASS OF VEHICLE

(00) Not a motor vehicle
(01) Subcompact/mini (wheelbase < 254 cm)
(02) Compact (wheelbase ≥ 254 but < 265 cm)
(03) Intermediate (wheelbase ≥ 265 but < 278 cm)
(04) Full size (wheelbase ≥ 278 but < 291 cm)
(05) Largest (wheelbase ≥ 291 cm)
(09) Unknown passenger car size
(11) Compact utility vehicle
(12) Large utility vehicle (≤ 4,500 kgs GVWR)
(13) Passenger van (≤ 4,500 kgs GVWR)
(14) Other van (≤ 4,500 kgs GVWR)
(15) Pickup truck (≤ 4,500 kgs GVWR)
(18) Other truck (≤ 4,500 kgs GVWR)
(19) Unknown light truck type
(20) School bus
(21) Other bus
(22) Truck (> 4,500 kgs GVWR)
(23) Tractor without trailer
(24) Tractor-trailer(s)
(25) Motored cycle
(28) Other vehicle
(99) Unknown

CODES FOR GENERAL AREA OF DAMAGE (GAD)

CDS APPLICABLE AND OTHER VEHICLES

(0) Not a motor vehicle
(N) Noncollision
(F) Front
(R) Right side
(L) Left side
(B) Back
(T) Top
(U) Undercarriage
(9) Unknown

TDC APPLICABLE VEHICLES

(0) Not a motor vehicle
(N) Noncollision
(F) Front
(R) Right side
(L) Left side
(B) Back of unit with cargo area (rear of trailer or straight truck)
(D) Back (rear of tractor)
(C) Rear of cab
(V) Front of cargo area
(T) Top
(U) Undercarriage
(9) Unknown

CODES FOR VEHICLE NUMBER OR OBJECT CONTACTED

(01-30) — Vehicle Number

Noncollision
(31) Overturn — rollover
(32) Fire or explosion
(33) Jackknife
(34) Other intraunit damage (specify): _____
(35) Noncollision injury
(38) Other noncollision (specify): _____
(39) Noncollision — details unknown

Collision With Fixed Object
(41) Tree (≤ 10 cm in diameter)
(42) Tree (> 10 cm in diameter)
(43) Shrubbery or bush
(44) Embankment
(45) Breakaway pole or post (any diameter)

Nonbreakaway Pole or Post
(50) Pole or post (≤ 10 cm in diameter)
(51) Pole or post (> 10 cm but ≤ 30 cm in diameter)
(52) Pole or post (> 30 cm in diameter)
(53) Pole or post (diameter unknown)
(54) Concrete traffic barrier
(55) Impact attenuator
(56) Other traffic barrier (includes guardrail) (specify): _____
(57) Fence
(58) Wall
(59) Building
(60) Ditch or culvert
(61) Ground
(62) Fire hydrant
(63) Curb
(64) Bridge
(68) Other fixed object (specify): _____
(69) Unknown fixed object

Collision with Nonfixed Object
(71) Motor vehicle not in-transport
(72) Pedestrian
(73) Cyclist or cycle
(74) Other nonmotorist or conveyance
(75) Vehicle occupant
(76) Animal
(77) Train
(78) Trailer, disconnected in transport
(79) Object fell from vehicle in-transport
(88) Other nonfixed object (specify): _____
(89) Unknown nonfixed object

(98) Other event (specify): _____
(99) Unknown event or object

psu 79-072F V-01

OCCUPANT RELATED

16. Driver Presence in Vehicle: 1
(0) Driver not present
(1) Driver present
(9) Unknown

17. Number of Occupants This Vehicle: 01
(00-96) Code actual number of occupants for this vehicle
(97) 97 or more
(99) Unknown

18. Number of Occupant Forms Submitted: 01

VEHICLE WEIGHT ITEMS

19. Vehicle Curb Weight: ~~9,990~~ 1380
____ Code weight to nearest 10 kilograms.
(045) Less than 450 kilograms
(610) 6,100 kilograms or more
(999) Unknown

3,040 lbs X .4536 = 1,379 kgs

Source: 1987 MVMA

20. Vehicle Cargo Weight: 9,990
____ Code weight to nearest 10 kilograms.
(000) Less than 5 kilograms
(450) 4,500 kilograms or more
(999) Unknown

___,___ lbs X .4536 = ___,___ kgs

RECONSTRUCTION DATA

21. Towed Trailing Unit: 0
(0) No towed unit
(1) Yes—towed trailing unit
(9) Unknown

22. Documentation of Trajectory Data for This Vehicle: 0
(0) No
(1) Yes

23. Post Collision Condition of Tree or Pole (For Highest Delta V): 0
(0) Not collision (for highest delta V) with tree or pole
(1) Not damaged
(2) Cracked/sheared
(3) Tilted <45 degrees
(4) Tilted ≥45 degrees
(5) Uprooted tree
(6) Separated pole from base
(7) Pole replaced
(8) Other (specify):

(9) Unknown

24. Rollover: ~~9~~ 2
(0) No rollover (no overturning)

Rollover (primarily about the longitudinal axis)
(1) Rollover, 1 quarter turn only
(2) Rollover, 2 quarter turns
(3) Rollover, 3 quarter turns
(4) Rollover, 4 or more quarter turns (specify):

(5) Rollover--end-over-end (i.e., primarily about the lateral axis)
(9) Rollover (overturn), details unknown

OVERRIDE/UNDERRIDE (THIS VEHICLE)

25. Front Override/Underride (this Vehicle): 9

26. Rear Override/Underride (this Vehicle): 0

(0) No override/underride, or not an end-to-end impact

Override (see specific CDC)
(1) 1st CDC
(2) 2nd CDC
(3) Other not automated CDC (specify):

Underride (see specific CDC)
(4) 1st CDC
(5) 2nd CDC
(6) Other not automated CDC (specify):

(7) Medium/heavy truck or bus override
(9) Unknown

HEADING ANGLE AT IMPACT FOR HIGHEST DELTA V

Values: (000)-(359) Code actual value
(997) Noncollision
(998) Impact with object
(999) Unknown

27. Heading Angle For This Vehicle: 070

28. Heading Angle For Other Vehicle: 260

PSU 79-072F V-01

Category	Configuration	ACCIDENT TYPES (Includes Intent)					
I Single Driver	A Right Roadside Departure	01 DRIVE OFF ROAD	02 CONTROL/ TRACTION LOSS	03 AVOID COLLISION WITH VEH., PED., ANIM.	04 SPECIFICS OTHER	05 SPECIFICS UNKNOWN	
	B Left Roadside Departure	06 DRIVE OFF ROAD	07 CONTROL/ TRACTION LOSS	08 AVOID COLLISION WITH VEH., PED., ANIM.	09 SPECIFICS OTHER	10 SPECIFICS UNKNOWN	
	C Forward Impact	11 PARKED VEH.	12 STA. OBJECT	13 PEDESTRIAN/ ANIMAL	14 END DEPARTURE	15 SPECIFICS OTHER	16 SPECIFICS UNKNOWN
II Same Trafficway Same Direction	D Rear-End	20 STOPPED 21, 22, 23	24 SLOWER 25, 26, 27	28 DECEL. 29, 30, 31	(EACH • 32) SPECIFICS OTHER	(EACH • 33) SPECIFICS UNKNOWN	
	E Forward Impact	34 CONTROL/ TRACTION LOSS 35	36 CONTROL/ TRACTION LOSS 37	38 AVOID COLLISION WITH VEH. 39	40 AVOID COLLISION WITH OBJECT 41	(EACH • 42) SPECIFICS OTHER	(EACH • 43) SPECIFICS UNKNOWN
	F Sideswipe Angle	44 45	46 47	(EACH • 48) SPECIFICS OTHER	(EACH • 49) SPECIFICS UNKNOWN		
III Same Trafficway Opposite Direction	G Head-On	50 51 LATERAL MOVE	(EACH • 52) SPECIFICS OTHER	(EACH • 53) SPECIFICS UNKNOWN			
	H Forward Impact	54 CONTROL/ TRACTION LOSS 55	56 CONTROL/ TRACTION LOSS 57	58 AVOID COLLISION WITH VEH. 59	60 AVOID COLLISION WITH OBJECT 61	(EACH • 62) SPECIFICS OTHER	(EACH • 63) SPECIFICS UNKNOWN
	I Sideswipe Angle	64 65 LATERAL MOVE	(EACH • 66) SPECIFICS OTHER	(EACH • 67) SPECIFICS UNKNOWN			
IV Change Trafficway Vehicle Turning	J Turn Across Path	68 69 INITIAL OPPOSITE DIRECTIONS	70 71 INITIAL SAME DIRECTIONS	72 73	(EACH • 74) SPECIFICS OTHER	(EACH • 75) SPECIFICS UNKNOWN	
	K Turn Into Path	76 77 TURN INTO SAME DIRECTION	78 79	80 81 TURN INTO OPPOSITE DIRECTIONS	82 83	(EACH • 84) SPECIFICS OTHER	(EACH • 85) SPECIFICS UNKNOWN
V Intersecting Paths (Vehicle Damage)	L Straight Paths	86 87	88 89	(EACH • 90) SPECIFICS OTHER	(EACH • 91) SPECIFICS UNKNOWN		
VI Miscellaneous	M Backing Etc.	92 BACKING VEH.	93 OTHER VEH. OR OBJECT	98 Other Accident Type 99 Unknown Accident Type 00 No Impact			

PSU 79-072F V-01

OTHER DATA

56. Driver's Zip Code [redacted]

(00000) Driver not present
(00001) Driver not a resident of U.S. or territories
_____ Code actual 5-digit zip code
(99999) Unknown

57. Driver's Race/Ethnic Origin 9
(0) Driver not present
(1) White (non-Hispanic)
(2) Black (non-Hispanic)
(3) White (Hispanic)
(4) Black (Hispanic)
(5) American Indian, Eskimo or Aleut
(6) Asian or Pacific Islander
(8) Other (specify): _____
(9) Unknown

58. Vehicle Special Use (This Trip) 0
(0) No special use
(1) Taxi
(2) Vehicle used as school bus
(3) Vehicle used as other bus
(4) Military
(5) Police
(6) Ambulance
(7) Fire truck or car
(8) Other (specify): _____
(9) Unknown

ROLLOVER DATA

If GV07 (Body Type) ≠ 1-49, leave GV59-GV63 blank.
If GV24 (Rollover) = 0, then GV59-GV63 must equal 0.
If GV24 = 9, then GV59-GV63 must equal 9.

59. Rollover Initiation Type 9 3
(0) No rollover
(1) Trip-over
(2) Flip-over
(3) Turn-over
(4) Climb-over
(5) Fall-over
(6) Bounce-over
(7) Collision with another vehicle
(8) Other rollover initiation type specify): _____
(9) Unknown rollover initiation type

60. Location of Rollover Initiation 9 1
(0) No rollover
(1) On roadway
(2) On shoulder—paved
(3) On shoulder—unpaved
(4) On roadside or divided trafficway median
(9) Unknown

61. Rollover Initiation Object Contacted ~~9 0~~ 31 ~~00~~

62. Location on Vehicle Where Initial Principal Tripping Force Is Applied 9 8
(0) No rollover
(1) Wheels/tires
(2) Side plane
(3) End plane
(4) Undercarriage
(5) Other location on vehicle (specify): _____
(8) Non-contact rollover forces (specify): centrifugal forces
(9) Unknown

63. Direction of Initial Roll 9 2
(0) No rollover
(1) Roll right - primarily about the longitudinal axis
(2) Roll left - primarily about the longitudinal axis
(5) End-over-end (i.e., primarily about the lateral axis)
(9) Unknown roll direction

PRECRASH DATA

64. Pre-Event Movement (Prior to Recognition of Critical Event) 9 9
(01) Going straight
(02) Slowing or stopping in traffic lane
(03) Starting in traffic lane
(04) Stopped in traffic lane
(05) Passing or overtaking another vehicle
(06) Disabled or parked in travel lane
(07) Leaving a parking position
(08) Entering a parking position
(09) Turning right
(10) Turning left
(11) Making a U-turn
(12) Backing up (other than for parking position)
(13) Negotiating a curve
(14) Changing lanes
(15) Merging
(16) Successful avoidance maneuver to a previous critical event
(97) Other (specify): _____
(98) No driver present
(99) Unknown

PSU 79-072F V-01

CODES FOR ROLLOVER INITIATION OBJECT CONTACTED

(00) No rollover
(01-30) — Vehicle Number

Noncollision
(31) Turn-over — fall-over
(33) Jackknife

Collision With Fixed Object
(41) Tree (≤ 10 cm in diameter)
(42) Tree (> 10 cm in diameter)
(43) Shrubbery or bush
(44) Embankment

(45) Breakaway pole or post (any diameter)

Nonbreakaway Pole or Post
(50) Pole or post (≤ 10 cm in diameter)
(51) Pole or post (> 10 cm but ≤ 30 cm in diameter)
(52) Pole or post (> 30 cm in diameter)
(53) Pole or post (diameter unknown)

(54) Concrete traffic barrier
(55) Impact attenuator
(56) Other traffic barrier (includes guardrail) (specify):_____

(57) Fence
(58) Wall
(59) Building
(60) Ditch or culvert
(61) Ground
(62) Fire hydrant
(63) Curb
(64) Bridge
(68) Other fixed object (specify):

_____
(69) Unknown fixed object

Collision with Nonfixed Object
(71) Motor vehicle not in-transport
(76) Animal
(77) Train
(78) Trailer, disconnected in transport
(79) Object fell from vehicle in-transport
(88) Other nonfixed object (specify):

_____
(89) Unknown nonfixed object

(98) Other event (specify):

_____
(99) Unknown event or object

PSU NUMBER 79

CASE NUMBER 072F

VEHICLE NUMBER 01

EXTERIOR VEHICLE FORM

THE FOLLOWING DATA IS NOT INCLUDED IN THIS CASE:

[✓] ENTIRE FORM

[] PAGE NUMBER (S) _____

PSU NUMBER 79

CASE NUMBER 072F

VEHICLE NUMBER 01

INTERIOR VEHICLE FORM

THE FOLLOWING DATA IS NOT INCLUDED IN THIS CASE:

[✓] ENTIRE FORM

[] PAGE NUMBER (S) _____

U.S. Department of Transportation
National Highway Traffic Safety Administration

OCCUPANT ASSESSMENT FORM

Form Approved
O.M.B. No. 2127-0021

NATIONAL ACCIDENT SAMPLING SYSTEM
CRASHWORTHINESS DATA SYSTEM

1. Primary Sampling Unit Number: 79
2. Case Number - Stratum: 072F
3. Vehicle Number: 01
4. Occupant Number: 01

OCCUPANT'S CHARACTERISTICS

5. Occupant's Age: 32
Code actual age at time of accident.
(00) Less than one year old (specify by month): _____
(97) 97 years and older
(99) Unknown

6. Occupant's Sex: 1
(1) Male
(2) Female
(9) Unknown

7. Occupant's Height: 183
Code actual height to the nearest centimeter.
(999) Unknown

72 inches X 2.54 = 183 centimeters

8. Occupant's Weight: 075
Code actual weight to the nearest kilogram.
(999)Unknown

165 pounds X .4536 = 075 kilograms

9. Occupant's Role: 1
(1) Driver
(2) Passenger
(9) Unknown

OCCUPANT'S SEATING

10. Occupant's Seat Position: 11
Front Seat
(11) Left side
(12) Middle
(13) Right side
(14) Other (specify): _____
(15) On or in the lap of another occupant

Second Seat
(21) Left side
(22) Middle
(23) Right side
(24) Other (specify): _____
(25) On or in the lap of another occupant

Third Seat
(31) Left side
(32) Middle
(33) Right side
(34) Other (specify): _____
(35) On or in the lap of another occupant

Fourth Seat
(41) Left side
(42) Middle
(43) Right side
(44) Other (specify): _____
(45) On or in the lap of another occupant

(97) In or on unenclosed area
(98) Other seat (specify): _____
(99) Unknown

11. Occupant's Posture: 9
(0) Normal posture

Abnormal posture
(1) Kneeling or standing on seat
(2) Lying on or across seat
(3) Kneeling, standing or sitting in front of seat
(4) Sitting sideways or turned to talk with another occupant or to look out a rear window
(5) Sitting on a console
(6) Lying back in a reclined seat position
(7) Bracing with feet or hands on a surface in front of seat
(8) Other abnormal posture (specify): _____
(9) Unknown

This report is authorized by P.L. 89-563, Title 1, Section 106, 108, and 112. While you are not required to respond, your cooperation is needed to make the results of this data collection effort comprehensive, accurate, and timely.

EJECTION/ENTRAPMENT

12. Ejection 9
    (0) No ejection
    (1) Complete ejection
    (2) Partial ejection
    (3) Ejection, unknown degree
    (9) Unknown

13. Ejection Area 9
    (0) No ejection
    (1) Windshield
    (2) Left front
    (3) Right front
    (4) Left rear
    (5) Right rear
    (6) Rear
    (7) Roof
    (8) Other area (e.g., back of pickup, etc.) (specify):_____
    (9) Unknown

14. Ejection Medium 9
    (0) No ejection
    (1) Door/hatch/tailgate
    (2) Nonfixed roof structure
    (3) Fixed glazing
    (4) Nonfixed glazing (specify):
    _____
    (5) Integral structure
    (8) Other medium (specify):
    _____
    (9) Unknown

15. Medium Status (Immediately Prior To Impact) 9
    (0) No ejection
    (1) Open
    (2) Closed
    (3) Integral structure
    (9) Unknown

16. Entrapment 9
    (NOTE: Entrapped means that part of the person was in the vehicle and mechanically restrained; jammed doors and immobilizing injuries by themselves are not sufficient to constitute entrapment.)
    (0) Not entrapped
    (1) Entrapped
    (9) Unknown

RESTRAINT SYSTEM EVALUATION

17. Manual (Active) Belt System Availability 4
(0) None available
(1) Belt removed/destroyed
(2) Shoulder belt
(3) Lap belt
(4) Lap and shoulder belt
(5) Belt available—type unknown

Integral Belt Partially Destroyed
(6) Shoulder belt (lap belt destroyed/removed)
(7) Lap belt (shoulder belt destroyed/removed)

(8) Other belt (specify): _____
(9) Unknown

from PAR.

18. Manual (Active) Belt System Use 99
(00) None used, not available, or belt removed/destroyed
(01) Inoperative (specify): _____
(02) Shoulder belt
(03) Lap belt
(04) Lap and shoulder belt
(05) Belt used—type unknown
(08) Other belt used (specify): _____
(12) Shoulder belt used with child safety seat
(13) Lap belt used with child safety seat
(14) Lap and shoulder belt used with child safety seat
(15) Belt used with child safety seat—type unknown
(18) Other belt used with child safety seat (specify): _____
(99) Unknown if belt used

19. Proper Use of Manual (Active) Belts 9
(0) None used or not available
(1) Belt used properly
(2) Belt used properly with child safety seat

Belt Used Improperly
(3) Shoulder belt worn under arm
(4) Shoulder belt worn behind back or seat
(5) Belt worn around more than one person
(6) Lap belt worn on abdomen
(7) Lap belt or lap and shoulder belt used improperly with child safety seat (specify): _____
(8) Other improper use of manual belt system (specify): _____
(9) Unknown

20. Manual (Active) Belt Failure Modes During Accident 9
(0) No manual belt used
(1) No manual belt failure(s)
(2) Torn webbing (stretched webbing not included)
(3) Broken buckle or latchplate
(4) Upper anchorage separated
(5) Other anchorage separated (specify): _____
(6) Broken retractor
(7) Combination of above (specify): _____
(8) Other manual belt failure (specify): _____
(9) Unknown

21. Air Bag System Availability/Function 9
(0) Not equipped/not available
(1) Air bag

Non-functional
(2) Air bag disconnected (specify): _____
(3) Air bag not reinstalled
(9) Unknown

22. Air Bag System Deployment 9
(0) Not equipped/not available
(1) Air bag deployed during accident (as a result of impact)
(2) Air bag deployed inadvertently just prior to accident
(3) Air bag deployed, accident sequence undetermined
(4) Nondeployed
(5) Unknown if deployed
(6) Air bag deployed as a result of a noncollision event during accident sequence (e.g., fire, explosion, electrical)
(9) Unknown

23. Are There Indications of Air Bag System Failure? 9
(0) Not equipped/not available
(1) No
(2) Yes (specify): _____
(9) Unknown

Note: See Variables 44 through 48 (Page 5) for Information on Automatic Belts

24. Police Reported Restraint Use 4
(0) None used
(1) Police did not indicate restraint use
(2) Shoulder belt
(3) Lap belt
(4) Lap and shoulder belt
(5) Belt used, type not specified
(6) Child safety seat
(7) Other or automatic restraint (specify): _____
(8) Restrained, type unknown
(9) Police indicated "unknown"

HEAD RESTRAINT AND SEAT EVALUATION

25. Head Restraint Type/Damage by Occupant at This Occupant Position: 9
    (0) No head restraints
    (1) Integral—no damage
    (2) Integral—damaged during accident
    (3) Adjustable—no damage
    (4) Adjustable—damaged during accident
    (5) Add-on—no damage
    (6) Add-on—damaged during accident
    (8) Other (specify): _____
    (9) Unknown

26. Seat Type (this Occupant Position): 99
    (00) Occupant not seated or no seat
    (01) Bucket
    (02) Bucket with folding back
    (03) Bench
    (04) Bench with separate back cushions
    (05) Bench with folding back(s)
    (06) Split bench with separate back cushions
    (07) Split bench with folding back(s)
    (08) Pedestal (i.e., column supported)
    (09) Other seat type (specify): _____
    (10) Box mounted seat (i.e., van type)
    (99) Unknown

27. Seat Performance (this Occupant Position): 9
    (0) Occupant not seated or no seat
    (1) No seat performance failure(s)
    (2) Seat adjusters failed
    (3) Seat back folding locks or "seat back" failed (specify): _____
    (4) Seat track/anchors failed
    (5) Deformed by impact of occupant
    (6) Deformed by passenger compartment intrusion (specify): _____
    (7) Combination of above (specify): _____
    (8) Other (specify): _____
    (9) Unknown

CHILD SAFETY SEAT

28. Child Safety Seat Make/Model 0 0 0
(000) No child safety seat
Applicable codes are found in your NASS CDS Data Collection, Coding and Editing
(950) Built-in child safety seat
(997) Other make/model (specify):
_____
(998) Unknown make/model
(999) Unknown if child safety seat used

29. Type of Child Safety Seat 0
(0) No child safety seat
(1) Infant seat
(2) Toddler seat
(3) Convertible seat
(4) Booster seat
(7) Other type child safety seat (specify):
_____
(8) Unknown child safety seat type
(9) Unknown if child safety seat used

30. Child Safety Seat Orientation 0 0
(00) No child safety seat

Designed for Rear Facing for This Age/Weight
(01) Rear facing
(02) Forward facing
(08) Other orientation (specify):
_____
(09) Unknown orientation

Designed For Forward Facing for This Age/Weight
(11) Rear facing
(12) Forward facing
(18) Other orientation (specify):
_____
(19) Unknown orientation

Unknown Design or Orientation For This Age/Weight, or Unknown Age/Weight
(21) Rear facing
(22) Forward facing
(28) Other orientation (specify):
_____
(29) Unknown orientation

(99) Unknown if child safety seat used

31. Child Safety Seat Harness Usage 0 0

32. Child Safety Seat Shield Usage 0 0

33. Child Safety Seat Tether Usage 0 0

Note: Options below applicable to Variables OA31-OA33.
(00) No child safety seat

Not Designed With Harness/Shield/Tether
(01) After market harness/shield/tether added, not used
(02) After market harness/shield/tether used
(03) Child safety seat used, but no after market harness/shield/tether added
(09) Unknown if harness/shield/tether added or used

Designed With Harness/Shield/Tether
(11) Harness/shield/tether not used
(12) Harness/shield/tether used
(19) Unknown if harness/shield/tether used

Unknown If Designed With Harness/Shield/Tether
(21) Harness/shield/tether not used
(22) Harness/shield/tether used
(29) Unknown if harness/shield/tether used

(99) Unknown if child safety seat used

INJURY CONSEQUENCES

34. Injury Severity (Police Rating) 2

(0) O - No injury
(1) C - Possible injury
(2) B - Nonincapacitating injury
(3) A - Incapacitating injury
(4) K - Killed
(5) U - Injury, severity unknown
(6) Died prior to accident
(9) Unknown

35. Treatment - Mortality 4

(0) No treatment
(1) Fatal
(2) Fatal - ruled disease (specify):

_____

Nonfatal Phone Kaiser?
(3) Hospitalization
(4) Transported and released
(5) Treatment at scene - nontransported
(6) Treatment later
(8) Treatment - other (specify):

_____

(9) Unknown

36. Type Of Medical Facility (for Initial Treatment) 2

(0) Not treated at a medical facility
(1) Trauma center Kaiser, W.H.
(2) Hospital
(3) Medical clinic
(4) Physician's office
(5) Treatment later at medical facility
(8) Other (specify):

_____

(9) Unknown

37. Hospital Stay 0 0

(00) Not Hospitalized
_____Code the number of days (up through 60) that the occupant stayed in hospital.
(61) 61 days or more
(99) Unknown

38. Working Days Lost 9 9

_____Code the number of days (up through 60) that the occupant lost from work due to the accident
(00) No working days lost
(61) 61 days or more
(62) Fatally injured
(97) Not working prior to accident
(99) Unknown

STOP - GO TO VARIABLE 44 ON PAGE 7

VARIABLES 39 THROUGH 43 ARE COMPLETED BY THE ZONE CENTER

39. Time to Death 0 0

_____Code number of hours from time of accident to time of death up through 24 hours. If time of death is greater than 24 hours, code number of days. (Note: 1 day = 31, 2 days = 32, ... n days = 30 +n up through 30 days = 60)
(00) Not fatal
(96) Fatal - ruled disease
(99) Unknown

40. 1st Medically Reported Cause of Death 0 0

41. 2nd Medically Reported Cause of Death 0 0

42. 3rd Medically Reported Cause of Death 0 0

_____Code the Occupant Injury from line number(s) for the medically reported injury(s) which reportedly contributed to this occupant's death
(00) Not fatal or no additional causes
(96) Mode of death given but specific injuries are not linked to cause of death. (specify):

_____

(97) Other result (includes fatal ruled disease) (specify):

_____

(99) Unknown

43. Number of Recorded Injuries for This Occupant 9 7

_____Code the actual number of injuries recorded for this occupant.
(00) No recorded injuries
(97) Injured, details unknown
(99) Unknown if injured

AUTOMATIC BELT SYSTEM

44. Automatic (Passive) Belt System Availability/ Function 9
(0) Not equipped/not available
(1) 2 point automatic belts
(2) 3 point automatic belts
(3) Automatic belts - type unknown

Non-functional
(4) Automatic belts destroyed or rendered inoperative
(9) Unknown

45. Automatic (Passive) Belt System Use 9
(0) Not equipped/not available/destroyed or rendered inoperative
(1) Automatic belt in use
(2) Automatic belt not in use (manually disconnected, motorized track inoperative) (specify):
(3) Automatic belt use unknown
(9) Unknown

46. Automatic (Passive) Belt System Type 9
(0) Not equipped/not available
(1) Non-motorized system
(2) Motorized system
(9) Unknown

47. Proper Use of Automatic (Passive) Belt System 9
(0) Not equipped/not available/not used
(1) Automatic belt used properly
(2) Automatic belt used properly with child safety seat

Automatic Belt Used Improperly
(3) Automatic shoulder belt worn under arm
(4) Automatic shoulder belt worn behind back
(5) Automatic belt worn around more than one person
(6) Lap portion of automatic belt worn on abdomen
(7) Automatic lap and shoulder belt or automatic shoulder belt used improperly with child safety seat (specify):
(8) Other improper use of automatic belt system (specify):
(9) Unknown

48. Automatic (Passive) Belt Failure Modes During Accident 9
(0) Not equipped/not available/not in use
(1) No automatic belt failure(s)
(2) Torn webbing (stretched webbing not included)
(3) Broken buckle or latchplate
(4) Upper anchorage separated
(5) Other anchorage separated (specify):
(6) Broken retractor
(7) Combination of above (specify):
(8) Other automatic belt failure (specify):
(9) Unknown

49. Seat Orientation (this Occupant Position) 9
(0) Occupant not seated or no seat
(1) Forward facing seat
(2) Rear facing seat
(3) Side facing seat (inward)
(4) Side facing seat (outward)
(8) Other (specify):
(9) Unknown

Check the Primary Source Used In Determining Belt Use.

[ ] Not equipped/not available/destroyed or rendered inoperative
[ ] Vehicle inspection
[ ] Official injury data
[ ] Driver/occupant interview
[ ] Other (specify):
[X] Unknown if belt used

ARE ALL APPLICABLE MEDICAL RECORDS INCLUDED WITH INITIAL SUBMISSION? NO [ ] YES [X] PAR
Kaiser has no record for name given.

UPDATE CANDIDATE? NO [X] YES [ ]

STOP - VARIABLES 50 THROUGH 53 ARE COMPLETED BY THE ZONE CENTER

TRAUMA DATA

50. Glasgow Coma Scale (GCS) Score (at Medical Facility) 97
    (00) Not injured
    (01) Injured - not treated at medical facility
    (02) No GCS Score at medical facility
    (03-15) Code the actual value of the initial GCS Score recorded at medical facility.
    (97) Injured, details unknown
    (99) Unknown if injured

51. Was the Occupant Given Blood? 9
    (1) No - blood not given
    (2) Yes - blood given
    (specify units):_____
    (9) Unknown if blood given

52. Arterial Blood Gases (ABG) - HCO_3 97
    (00) Not injured
    (01) Injured, ABGs not measured or reported
    (02-50) Code the actual value of the HCO_3
    (96) ABGs reported , HCO_3 unknown
    (97) Injured, details unknown
    (99) Unknown if injured

BELT USE DETERMINATION

53. Primary Source of Belt Use Determination 9
    (0) Not equipped/not available/destroyed or rendered inoperative
    (1) Vehicle inspection
    (2) Official injury data
    (3) Driver/occupant interview
    (8) Other (specify):_____
    (9) Unknown if belt used

PSU NUMBER 79

CASE NUMBER 072F

VEHICLE NUMBER 01

OCCUPANT NUMBER 01

OCCUPANT INJURY FORM

THE FOLLOWING DATA IS NOT INCLUDED IN THIS CASE:

[✓] ENTIRE FORM

[] PAGE NUMBER (S) _____

OCCUPANT RELATED

16. Driver Presence in Vehicle: 1
(0) Driver not present
(1) Driver present
(9) Unknown

17. Number of Occupants This Vehicle: 01
(00-96) Code actual number of occupants for this vehicle
(97) 97 or more
(99) Unknown

18. Number of Occupant Forms Submitted: 01

VEHICLE WEIGHT ITEMS

19. Vehicle Curb Weight: 1,510
____Code weight to nearest 10 kilograms.
(045) Less than 450 kilograms
(610) 6,100 kilograms or more
(999) Unknown

03,331 lbs X .4536 = 1,511 kgs

Source: [redacted]

20. Vehicle Cargo Weight: 0,000
____Code weight to nearest 10 kilograms.
(000) Less than 5 kilograms
(450) 4,500 kilograms or more
(999) Unknown

00,000 lbs X .4536 = 0,000 kgs

RECONSTRUCTION DATA

21. Towed Trailing Unit: 0
(0) No towed unit
(1) Yes—towed trailing unit
(9) Unknown

(22) Documentation of Trajectory Data for This Vehicle: 0
(0) No
(1) Yes

23. Post Collision Condition of Tree or Pole (For Highest Delta V): 0
(0) Not collision (for highest delta V) with tree or pole
(1) Not damaged
(2) Cracked/sheared
(3) Tilted <45 degrees
(4) Tilted ≥45 degrees
(5) Uprooted tree
(6) Separated pole from base
(7) Pole replaced
(8) Other (specify): _____
(9) Unknown

24. Rollover: 0
(0) No rollover (no overturning)

Rollover (primarily about the longitudinal axis)
(1) Rollover, 1 quarter turn only
(2) Rollover, 2 quarter turns
(3) Rollover, 3 quarter turns
(4) Rollover, 4 or more quarter turns (specify): _____

(5) Rollover--end-over-end (i.e., primarily about the lateral axis)
(9) Rollover (overturn), details unknown

OVERRIDE/UNDERRIDE (THIS VEHICLE)

25. Front Override/Underride (this Vehicle): 9

26. Rear Override/Underride (this Vehicle): 0

(0) No override/underride, or not an end-to-end impact

Override (see specific CDC)
(1) 1st CDC
(2) 2nd CDC
(3) Other not automated CDC (specify): _____

Underride (see specific CDC)
(4) 1st CDC
(5) 2nd CDC
(6) Other not automated CDC (specify): _____

(7) Medium/heavy truck or bus override
(9) Unknown

HEADING ANGLE AT IMPACT FOR HIGHEST DELTA V

Values: (000)-(359) Code actual value
(997) Noncollision
(998) Impact with object
(999) Unknown

27. Heading Angle For This Vehicle: 260

28. Heading Angle For Other Vehicle: 070

PSU 79-072F V-02

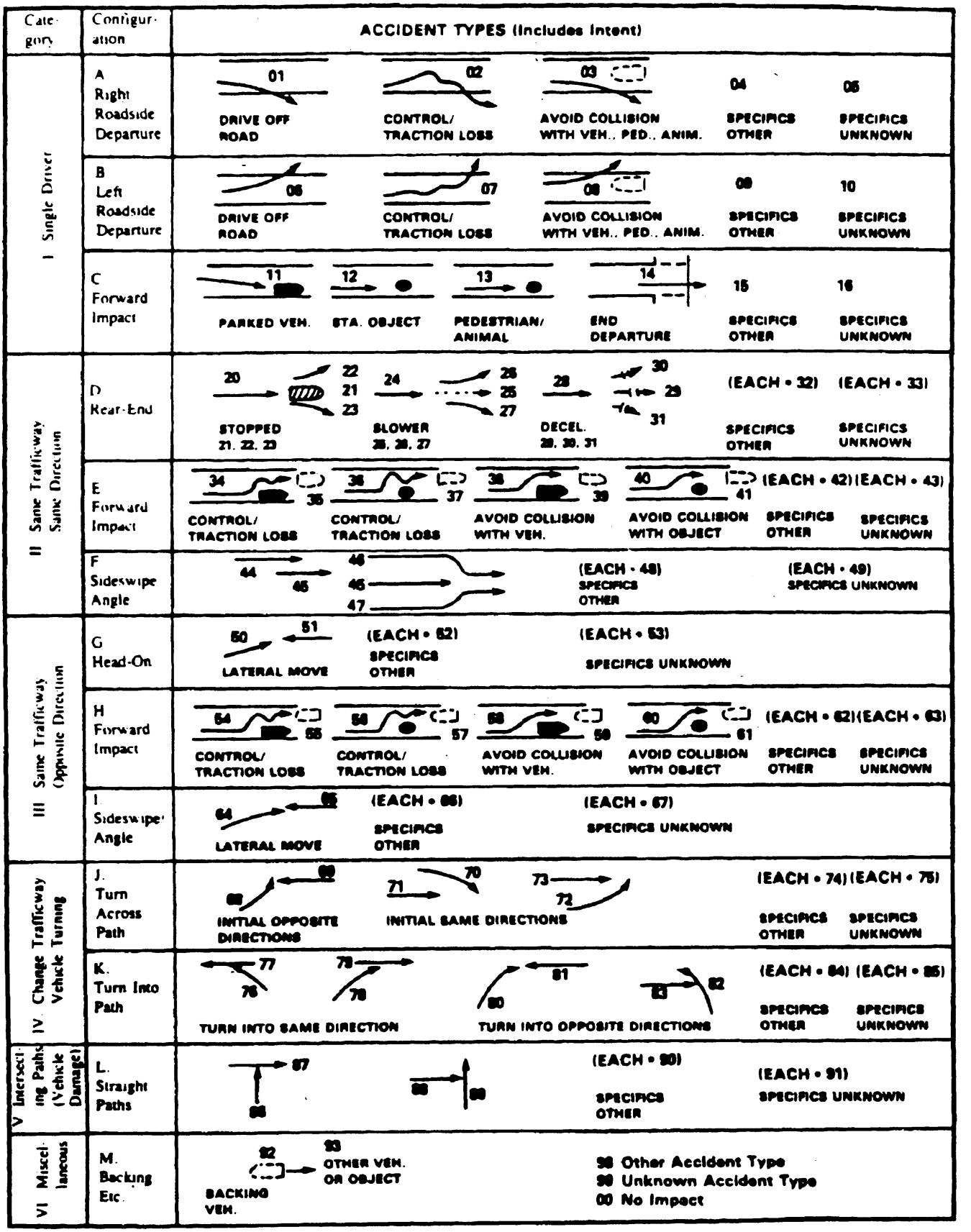

BEST AVAILABLE

OTHER DATA

56. Driver's Zip Code [redacted]

(00000) Driver not present
(00001) Driver not a resident of U.S. or territories
_____ Code actual 5-digit zip code
(99999) Unknown

57. Driver's Race/Ethnic Origin 9
(0) Driver not present
(1) White (non-Hispanic)
(2) Black (non-Hispanic)
(3) White (Hispanic)
(4) Black (Hispanic)
(5) American Indian, Eskimo or Aleut
(6) Asian or Pacific Islander
(8) Other (specify): _____
(9) Unknown

58. Vehicle Special Use (This Trip) 0
(0) No special use
(1) Taxi
(2) Vehicle used as school bus
(3) Vehicle used as other bus
(4) Military
(5) Police
(6) Ambulance
(7) Fire truck or car
(8) Other (specify): _____
(9) Unknown

ROLLOVER DATA

If GV07 (Body Type) ≠ 1-49, leave GV59-GV63 blank.
If GV24 (Rollover) = 0, then GV59-GV63 must equal 0.
If GV24 = 9, then GV59-GV63 must equal 9.

59. Rollover Initiation Type 0
(0) No rollover
(1) Trip-over
(2) Flip-over
(3) Turn-over
(4) Climb-over
(5) Fall-over
(6) Bounce-over
(7) Collision with another vehicle
(8) Other rollover initiation type specify): _____
(9) Unknown rollover initiation type

60. Location of Rollover Initiation 0
(0) No rollover
(1) On roadway
(2) On shoulder—paved
(3) On shoulder—unpaved
(4) On roadside or divided trafficway median
(9) Unknown

61. Rollover Initiation Object Contacted 0 0

62. Location on Vehicle Where Initial Principal Tripping Force Is Applied 0
(0) No rollover
(1) Wheels/tires
(2) Side plane
(3) End plane
(4) Undercarriage
(5) Other location on vehicle (specify): _____
(8) Non-contact rollover forces (specify): _____
(9) Unknown

63. Direction of Initial Roll 0
(0) No rollover
(1) Roll right - primarily about the longitudinal axis
(2) Roll left - primarily about the longitudinal axis
(5) End-over-end (i.e., primarily about the lateral axis)
(9) Unknown roll direction

PRECRASH DATA

64. Pre-Event Movement (Prior to Recognition of Critical Event) 99 01
(01) Going straight
(02) Slowing or stopping in traffic lane
(03) Starting in traffic lane
(04) Stopped in traffic lane
(05) Passing or overtaking another vehicle
(06) Disabled or parked in travel lane
(07) Leaving a parking position
(08) Entering a parking position
(09) Turning right
(10) Turning left
(11) Making a U-turn
(12) Backing up (other than for parking position)
(13) Negotiating a curve
(14) Changing lanes
(15) Merging
(16) Successful avoidance maneuver to a previous critical event
(97) Other (specify): _____
(98) No driver present
(99) Unknown

psu 79-072F V-02

CODES FOR ROLLOVER INITIATION OBJECT CONTACTED

(00) No rollover
(01-30) — Vehicle Number

Noncollision
(31) Turn-over — fall-over
(33) Jackknife

Collision With Fixed Object
(41) Tree (≤ 10 cm in diameter)
(42) Tree (> 10 cm in diameter)
(43) Shrubbery or bush
(44) Embankment

(45) Breakaway pole or post (any diameter)

Nonbreakaway Pole or Post
(50) Pole or post (≤ 10 cm in diameter)
(51) Pole or post (> 10 cm but ≤ 30 cm in diameter)
(52) Pole or post (> 30 cm in diameter)
(53) Pole or post (diameter unknown)

(54) Concrete traffic barrier
(55) Impact attenuator
(56) Other traffic barrier (includes guardrail) (specify):_____

(57) Fence
(58) Wall
(59) Building
(60) Ditch or culvert
(61) Ground
(62) Fire hydrant
(63) Curb
(64) Bridge
(68) Other fixed object (specify):
_____
(69) Unknown fixed object

Collision with Nonfixed Object
(71) Motor vehicle not in-transport
(76) Animal
(77) Train
(78) Trailer, disconnected in transport
(79) Object fell from vehicle in-transport
(88) Other nonfixed object (specify):
_____
(89) Unknown nonfixed object

(98) Other event (specify):
_____
(99) Unknown event or object

U.S. Department of Transportation
National Highway Traffic Safety Administration

BEST AVAILABLE [redacted] 92

EXTERIOR VEHICLE FORM

NATIONAL ACCIDENT SAMPLING SYSTEM
CRASHWORTHINESS DATA SYSTEM

1. Primary Sampling Unit Number: 79
2. Case Number - Stratum: 072F
3. Vehicle Number: 02

VEHICLE IDENTIFICATION

VIN 1X27D6K118Ø[redacted] Model Year 76

Vehicle Make (specify): CHEVROLET Vehicle Model (specify): NOVA

LOCATOR

Locate the end of the damage with respect to the vehicle longitudinal center line or bumper corner for end impacts or an undamaged axle for side impacts.

Specific Impact No.	Location of Direct Damage	Location of Field L
01	Begins at RF bumper corner to 26cm left of center	across entire front

CRUSH PROFILE IN CENTIMETERS

NOTES: Identify the plane at which the C-measurements are taken (e.g., at bumper, above bumper, at sill, above sill, etc.) and label adjustments (e.g., free space).

Measure and document on the vehicle diagram the location of maximum crush.

Measure C1 to C6 from driver to passenger side in front or rear impacts and rear to front in side impacts.

Direct damage begins 26 cm left of longitudinal center

Free space value is defined as the distance between the baseline and the original body contour taken at the individual C locations. This may include the following: bumper lead, bumper taper, side protrusion, side taper, etc. Record the value for each C-measurement and maximum crush.

Use as many lines/columns as necessary to describe each damage profile. interval 32.6

Specific Impact Number	Plane of Impact C-Measurements	Direct Damage Width (CDC)	Direct Damage Max Crush	Field L	C_1	C_2	C_3	C_4	C_5	C_6	±D
01	mid bumper	55 cm	42	163	7.5	2.5	6.5	12	20	42	~~Ø~~
USE	freespace		11		11	2	0	0	2	11	+54
	result		31		Ø	.5	6.5	12	18	31	
01	mid grill	55 cm	64	163	22	13	14	17	21	73	Ø
	freespace+adj.		10		22	11	12	12	12	32	
	result		54		Ø	2	2	5	9	41	
	~~Average~~ =										

HS Form 435A (Rev. 1/94)

STRINGLINE SET AT 500 cm from rear baseline.

BEST AVAILABLE

ORIGINAL SPECIFICATIONS WORK SHEET

Wheelbase	111.0	inches	x 2.54	=	282	cm
Overall Length	196.7	inches	x 2.54	=	500	cm
Maximum Width	072.2	inches	x 2.54	=	183	cm
Curb Weight ~~3415~~ 3331	3,331	pounds	x .4536	=	1,511	kg
Average Track	60.15	inches	x 2.54	=	153	cm
Front Overhang	___.___	inches	x 2.54	=	085	cm
Rear Overhang	___.___	inches	x 2.54	=	129	cm
Undeformed End Width	64.1	inches	x 2.54	=	163	cm
Engine Size: cyl./displ. U 66	250	cc	x .001	=	2.5	L
	___	CID	x .0164	=	___.___	L

damage at ~~r head~~ headlamp edge 63 − 12 = 51

at mid bumper = 45 − 11 = 34 − undeformed.

VEHICLE DAMAGE SKETCH

TIRE—WHEEL DAMAGE

a. Rotation physically restricted

RF 1
LF 2
RR 2
LR 2

b. Tire deflated

RF 1
LF 2
RR 2
LR 2

(1) Yes (2) No (8) NA (9) Unk.

TYPE OF TRANSMISSION

☐ Manual ☒ Automatic

ORIGINAL SPECIFICATIONS

Wheelbase	282	cm
Overall Length	500	cm
Maximum Width	183	cm
Curb Weight	1511	kg
Average Track	153	cm
Front Overhang (CANADIAN)	085	cm
Rear Overhang	129	cm
Undeformed End Width	163	cm
Engine Size: cyl./displ.	V-6/2.5	L

WHEEL STEER ANGLES
(For locked front wheels or displaced rear axles only)

RF ± 00 °
LF ± 00 °
RR ± —— °
LR ± —— °

Within ± 5 degrees

DRIVE WHEELS

☐ FWD ☑ RWD ☐ 4WD

Approximate Cargo Weight —0— kg

MEASUREMENTS IN CENTIMETERS

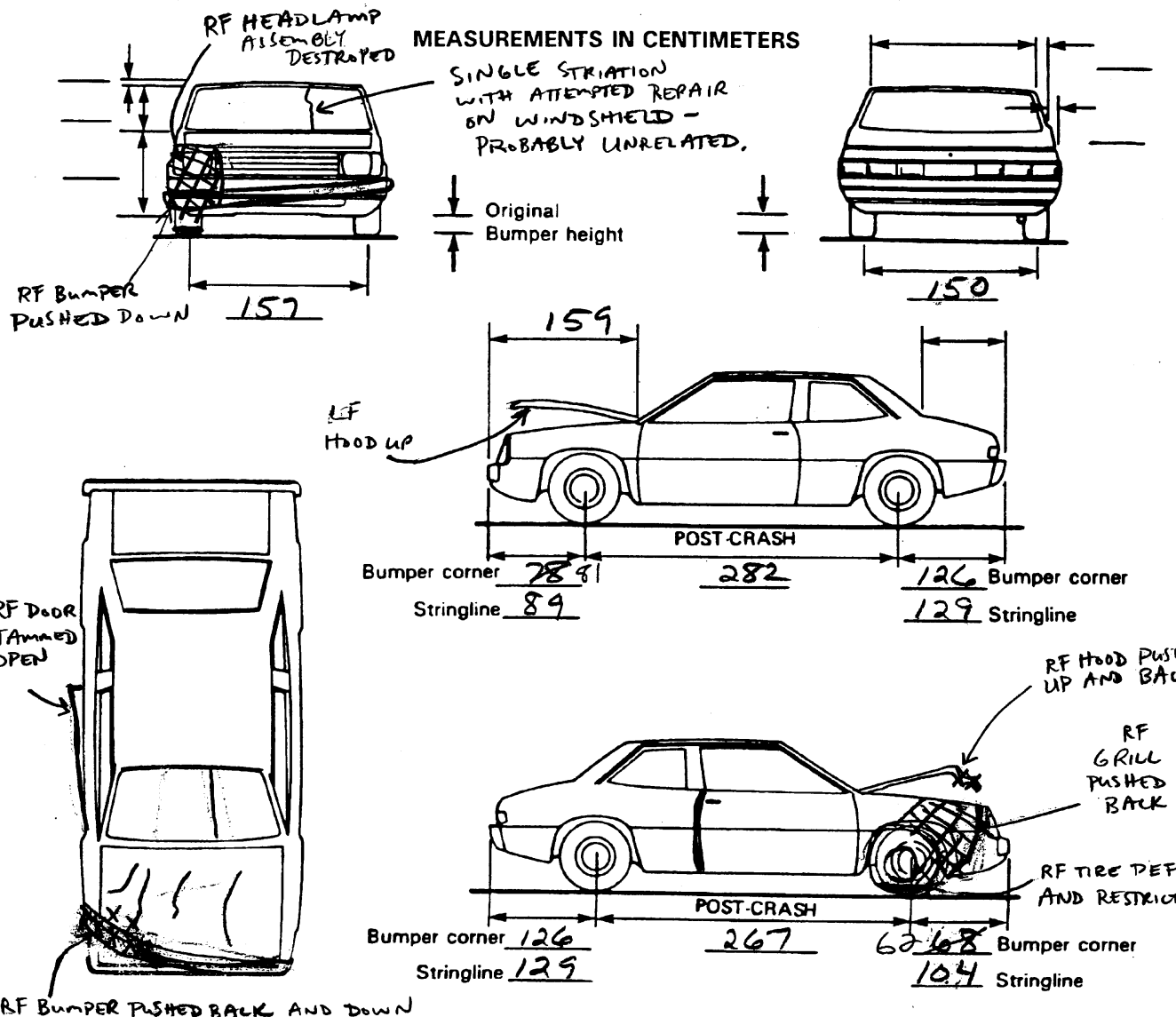

NOTES: Sketch new perimeter and cross hatch direct damage and single hatch induced damage on all views. Annotate observations which might be useful in reconstructing the accident (e.g., grass in tire bead, direction of striations, scuff on sidewalls, etc.). If pulling trailer, sketch type of trailer and damage received on the back of this page.

Annotate any damage caused by extrication such as component removal by torching, prying, or hydraulic shears.

CDC WORKSHEET

CODES FOR OBJECT CONTACTED

(01-30) — Vehicle Number

Noncollision
- (31) Overturn — rollover
- (32) Fire or explosion
- (33) Jackknife
- (34) Other intraunit damage (specify): _____
- (35) Noncollision injury
- (38) Other noncollision (specify): _____
- (39) Noncollision — details unknown

Collision With Fixed Object
- (41) Tree (≤ 10 cm in diameter)
- (42) Tree (> 10 cm in diameter)
- (43) Shrubbery or bush
- (44) Embankment
- (45) Breakaway pole or post (any diameter)

Nonbreakaway Pole or Post
- (50) Pole or post (≤ 10 cm in diameter)
- (51) Pole or post (> 10 cm but ≤ 30 cm in diameter)
- (52) Pole or post (> 30 cm in diameter)
- (53) Pole or post (diameter unknown)
- (54) Concrete traffic barrier
- (55) Impact attenuator
- (56) Other traffic barrier (includes guardrail) (specify): _____
- (57) Fence
- (58) Wall
- (59) Building
- (60) Ditch or culvert
- (61) Ground
- (62) Fire hydrant
- (63) Curb
- (64) Bridge
- (68) Other fixed object (specify): _____
- (69) Unknown fixed object

Collision with Nonfixed Object
- (71) Motor vehicle not in-transport
- (72) Pedestrian
- (73) Cyclist or cycle
- (74) Other nonmotorist or conveyance
- (75) Vehicle occupant
- (76) Animal
- (77) Train
- (78) Trailer, disconnected in transport
- (79) Object fell from vehicle in-transport
- (88) Other nonfixed object (specify): _____
- (89) Unknown nonfixed object
- (98) Other event (specify): _____
- (99) Unknown event or object

DEFORMATION CLASSIFICATION BY EVENT NUMBER

Direct d. only — Corner? side?

Accident Event Sequence Number	Object Contacted	(1) (2) Direction of Force (degrees)	Incremental Value of Shift	(3) Deformation Location	(4) Specific Longitudinal or Lateral Location	(5) Specific Vertical or Lateral Location	(6) Type of Damage Distribution	(7) Deformation Extent (checked)
01	01	~~040~~	00	F	R	E	W	02
		000						

COLLISION DEFORMATION CLASSIFICATION

HIGHEST DELTA "V"

Accident Event Sequence Number	Object Contacted	(1) (2) Direction of Force	(3) Deformation Location	(4) Longitudinal or Lateral Location	(5) Vertical or Lateral Location	(6) Type of Damage Distribution	(7) Deformation Extent (check)
4. 01	5. 01	6. ~~01~~ 12	7. F	8. R	9. E	10. W	11. 02

Second Highest Delta "V"

12.	13.	14.	15.	16.	17.	18.	19.

CRUSH PROFILE IN CENTIMETERS

The crush profile for the damage described in the CDC(s) above should be documented in the appropriate space below. (ALL MEASUREMENTS ARE IN CENTIMETERS.)

HIGHEST DELTA "V"

20. L (CRASH#)	21. C_1	C_2	C_3	C_4	C_5	C_6	22. ±D
163	000	001	007	012	018	031	+ 054 / ~~+ 000~~

Second Highest Delta "V"

23. L	24. C_1	C_2	C_3	C_4	C_5	C_6	25. ±D
							+ / −

26. Are CDCs Documented but Not Coded on The Automated File? 0
(0) No
(1) Yes

27. Researcher's Assessment of Vehicle Disposition 1
(0) Not towed due to vehicle damage
(1) Towed due to vehicle damage
(9) Unknown

28. Original Wheelbase 282
Code to the nearest centimeter
(999) Unknown

111.0 inches X 2.54 = 282 centimeters

29. Is This A Multi-Stage Manufactured Vehicle And/Or A Certified Altered Vehicle? 0
    (0) No post manufacturer modifications
    (1) Yes - post manufacturer modifications (specify): _____
    _____
    _____
    (Include photograph of CERTIFICATION PLACARD in case report)
    (9) Unknown if vehicle is modified

30. Fire Occurrence 0
    (0) No fire

    Yes, fire occurred
    (1) Minor
    (2) Major
    (9) Unknown

31. Origin of Fire 0
    (0) No fire
    (1) Vehicle exterior (front, side, back, top)
    (2) Exhaust system
    (3) Fuel tank (and other fuel retention system parts)
    (4) Engine compartment
    (5) Cargo/trunk compartment
    (6) Instrument panel
    (7) Passenger compartment area
    (8) Other location (specify):
    _____
    (9) Unknown

32. Type of Fuel Tank-1 1

33. Type of Fuel Tank-2 0
    (0) No fuel tank (electrical vehicle)
    (1) Metallic
    (2) Non-metallic
    (9) Unknown

34. Fuel Tank-1 Location 1

35. Fuel Tank-2 Location 0
    (0) No fuel tank
    (1) Aft of center of the rear wheels (rear axle) centered
    (2) Aft of center of the rear wheels (rear axle) left side
    (3) Aft of center of the rear wheels (rear axle) right side
    (4) Forward of center of the rear wheels (rear axle) centered
    (5) Forward of center of the rear wheels (rear axle) left side
    (6) Forward of center of the rear wheels (rear axle) right side
    (7) Over center of the rear wheels (rear axle)
    (8) Other (specify):
    _____
    (9) Unknown

36. Fuel Tank-1 Filler Cap Location 1

37. Fuel Tank-2 Filler Cap Location 0
    (0) No fuel tank
    (1) On back plane
    (2) Aft of center of the rear wheels (rear axle) on left side plane
    (3) Aft of center of the rear wheels (rear axle) on right side plane
    (4) Forward of center of the rear wheels (rear axle) on left side plane
    (5) Forward of center of the rear wheels (rear axle) on right side plane
    (6) Over the center of the rear wheels (rear axle) on left side plane
    (7) Over the center of the rear wheels (rear axle) on right side plane
    (8) Other (specify): _____
    (9) Unknown

38. Fuel Tank-1 Damage 1

39. Fuel Tank-2 Damage 0
    (0) No fuel tank
    (1) No damage to fuel tank
    (2) Deformed, no seam failure
    (3) Deformed, with a seam failure
    (4) Punctured
    (5) Lacerated (ripped)
    (6) Abraded (scraped)
    (7) Filler neck separation from the fuel tank
    (8) Other damage (specify):
    _____
    (9) Unknown

40. Location of Fuel System-1 Leakage 1

41. Location of Fuel System-2 Leakage 0
(0) No fuel tank
(1) No fuel leakage

Primary Area Of Leakage
(2) Tank
(3) Filler neck
(4) Cap
(5) Lines/pump/filter
(6) Vent/emission recovery
(8) Other (specify): _____
(9) Unknown

42. Fuel Type-1 01

43. Fuel Type-2 00

Single Fuel Type
(00) No fuel tank
(01) Gasoline
(02) Diesel
(03) CNG (Compressed Natural Gas)
(04) LPG (Liquid Petroleum Gas) also known as Propane
(05) LNG (Liquid Natural Gas)
(06) Methanol (M100 or M85)
(07) Ethanol (E100 or E85)
(08) Other (Hydrogen or others) (specify): _____

Electric Powered or Electric/Solar Powered Vehicles
(10) Lead Acid Battery
(11) Nickel-Iron Battery
(12) Nickel-Cadmium Battery
(13) Sodium Metal Chloride Battery
(14) Sodium Sulfur Battery
(18) Other (Specify): _____

(98) Other Hybrid (specify): _____

(99) Unknown fuel type

44. Is This Vehicle Equipped With More Than Two Fuel Tanks? 0
(0) No (one or two tanks only)

Yes - More Than Two Tanks
(1) Yes -- no damage to any tank or filler cap and no fuel system leakage
(2) Yes -- no damage to any tank or filler cap but there is fuel system leakage (specify leakage location): _____
(3) Yes -- damage to an additional tank or filler cap and there is fuel system leakage (specify the following):
Type of tank _____
Tank location _____
Filler cap location _____
Tank damage _____
Location of leakage _____
Type of fuel _____
(9) Unknown if more than two tanks

COMMENTS

_____

_____

_____

_____

_____

_____

_____

_____

_____

_____

_____

_____

*** STOP: IF THE CDS APPLICABLE VEHICLE WAS NOT TOWED AND WAS NOT AN AOPS *** (I.E., GV09 = 0 OR 9 AND GV36 = 0), DO NOT COMPLETE THE INTERIOR VEHICLE FORM.

U.S. Department of Transportation

National Highway Traffic Safety Administration

INTERIOR VEHICLE FORM

NATIONAL ACCIDENT SAMPLING SYSTEM
CRASHWORTHINESS DATA SYSTEM

1. Primary Sampling Unit Number 79
2. Case Number - Stratum 072 F
3. Vehicle Number 02

INTEGRITY

4. Passenger Compartment Integrity 00
   (00) No integrity loss

   Yes, Integrity Was Lost Through
   (01) Windshield
   (02) Door (side)
   (03) Door/hatch (back door)
   (04) Roof
   (05) Roof glass
   (06) Side window
   (07) Rear window (backlight)
   (08) Roof and roof glass
   (09) Windshield and door (side)
   (10) Windshield and roof
   (11) Side and rear window (side window and backlight)
   (12) Windshield and side window
   (13) Door and side window
   (98) Other combination of above (specify): _____
   (99) Unknown

Door, Tailgate or Hatch Opening

jam at life?

5. LF 1 6. RF 3 7. LR 0 8. RR 0 9. TG/H 0

   (0) No door/gate/hatch
   (1) Door/gate/hatch remained closed and operational
   (2) Door/gate/hatch came open during collision
   (3) Door/gate/hatch jammed shut
   (8) Other (specify): _____
   (9) Unknown

Damage/Failure Associated with Door, Tailgate or Hatch Opening in Collision. If IV05-IV09 ≠ 2, Then code Ø

10. LF 0 11. RF 0 12. LR 0 13. RR 0 14. TG/H 0

   (0) No door/gate/hatch or door not opened Ask

   Door, Tailgate or Hatch Came Open During Collision
   (1) Door operational (no damage)
   (2) Latch/striker failure due to damage
   (3) Hinge failure due to damage
   (4) Door structure failure due to damage
   (5) Door support (i.e., pillar, sill, roof side rail, etc.) failure due to damage
   (6) Latch/striker and hinge failure due to damage
   (8) Other failure (specify): _____
   (9) Unknown

GLAZING

Glazing Damage from Impact Forces

15. WS 0 16. LF 0 17. RF 0 18. LR 0 19. RR 0
20. BL 0 21. Roof 8 22. Other 8

   (0) No glazing damage from impact forces
   (2) Glazing in place and cracked from impact forces
   (3) Glazing in place and holed from impact forces
   (4) Glazing out-of-place (cracked or not) and not holed from impact forces
   (5) Glazing out-of-place and holed from impact forces
   (6) Glazing disintegrated from impact forces
   (7) Glazing removed prior to accident
   (8) No glazing
   (9) Unknown if damaged

Glazing Damage from Occupant Contact

23. WS 0 24. LF 0 25. RF 0 26. LR 0 27. RR 0
28. BL 0 29. Roof 0 30. Other 6

   (0) No occupant contact to glazing or no glazing
   (1) Glazing contacted by occupant but no glazing damage
   (2) Glazing in place and cracked by occupant contact
   (3) Glazing in place and holed by occupant contact
   (4) Glazing out-of-place (cracked or not) by occupant contact and not holed by occupant contact
   (5) Glazing out-of-place by occupant contact and holed by occupant contact
   (6) Glazing disintegrated by occupant contact poss. W.S. Contact. photo'd, sheetal
   (9) Unknown if contacted by occupant

If No Glazing Damage *And* No Occupant Contact or No Glazing, Then Code IV31 Through IV46 As Ø

Type of Window/Windshield Glazing

31. WS 0 32. LF 0 33. RF 0 34. LR 0 35. RR 0
36. BL 0 37. Roof 0 38. Other 0

   (0) No glazing contact and no damage, or no glazing
   (1) AS-1 — Laminated
   (2) AS-2 — Tempered
   (3) AS-3 — Tempered-tinted
   (4) AS-14 — Glass/Plastic
   (8) Other (specify): _____
   (9) Unknown

Window Precrash Glazing Status

39. WS 0 40. LF 0 41. RF 0 42. LR 0 43. RR 0
44. BL 0 45. Roof 0 46. Other 0

   (0) No glazing contact and no damage, or no glazing
   (1) Fixed
   (2) Closed
   (3) Partially opened
   (4) Fully opened
   (9) Unknown

INTRUSION WORKSHEET

Note: Sketch intruded areas

Ⓛ and Ⓡ interior door panels gone

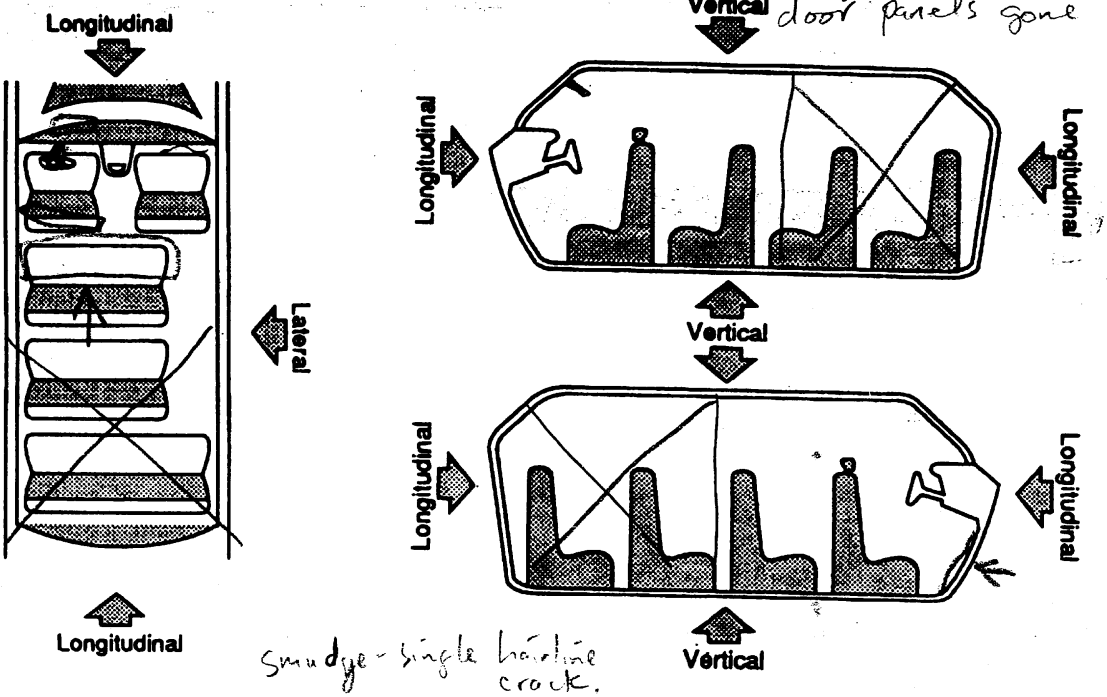

Smudge - single hairline crack.

LOCATION OF INTRUSION	INTRUDED COMPONENT	(All Measurements Are In Centimeters) COMPARISON VALUE	–	INTRUDED VALUE	=	INTRUSION	DOMINANT CRUSH DIRECTION	
11	instrument panel Ⓡ	0	–	0	=	0	—	
11	bezel only instr. panel Ⓒ	0	–	3	=	3	2	7
11	instr. panel Ⓛ	0	–	0	=	0	—	
11	windshield	0	–	0	=	0	—	
11	~~steering ass.~~	~~0~~	~~–~~	~~3~~	~~=~~	~~3~~	2	~~5~~
21/22/23	R, L, C rear seat cushion	0	–	10	=	10	2	1,2,3
11	Steering ass.	0	–	3.5	=	3.5	3	6
13	Ⓡ toe pan	0	–	5	=	5	1	5
11	Ⓓ visor	4	–	9	=	5	1	4
			–		=			
			–		=			
			–		=			
			–		=			
			–		=			
			–		=			

Document no more than the 15 most severe intrusions

OCCUPANT AREA INTRUSION

Note: If no intrusions, leave variables IV47-IV86 blank.

	Location of Intrusion	Intruding Component	Magnitude of Intrusion	Dominant Crush Direction
1st	47. 13	48. 05	49. 1	50. 1
2nd	51.	52.	53.	54.
3rd	55.	56.	57.	58.
4th	59. 11	60. 26	61. 1	62. 1
5th	63. 13	64. 05	65. 1	66. 1
6th	67. 11	68. 01	69. 1	70. 2
7th	71. 11	72. 02	73. 1	74. 2
8th	75.	76.	77.	78.
9th	79.	80.	81.	82.
10th	83.	84.	85.	86.

LOCATION OF INTRUSION

Front Seat
- (11) Left
- (12) Middle
- (13) Right

Second Seat
- (21) Left
- (22) Middle
- (23) Right

Third Seat
- (31) Left
- (32) Middle
- (33) Right

Fourth Seat
- (41) Left
- (42) Middle
- (43) Right

- (97) Catastrophic
- (98) Other enclosed area (specify) _____
- (99) Unknown

INTRUDING COMPONENT

Interior Components
- (01) Steering assembly
- (02) Instrument panel left
- (03) Instrument panel center
- (04) Instrument panel right
- (05) Toe pan
- (06) A (A1/A2)-pillar
- (07) B-pillar
- (08) C-pillar
- (09) D-pillar
- (10) Door panel (side)
- (12) Roof (or convertible top)
- (13) Roof side rail
- (14) Windshield
- (15) Windshield header
- (16) Window frame
- (17) Floor pan (includes sill)
- (18) Backlight header
- (19) Front seat back
- (20) Second seat back
- (21) Third seat back
- (22) Fourth seat back
- (23) Fifth seat back
- (24) Seat cushion
- (25) Back door/panel (e.g., tailgate)
- (26) Other interior component (specify): visor
- (27) Side panel - forward of the A (A2)-pillar
- (28) Side panel - rear of the A (A2)-pillar

Exterior Components
- (30) Hood
- (31) Outside surface of this vehicle (specify): _____
- (32) Other exterior object in the environment (specify): _____
- (33) Unknown exterior object
- (97) Catastrophic
- (98) Intrusion of unlisted component(s) (specify): _____
- (99) Unknown

MAGNITUDE OF INTRUSION
- (1) ≥ 3 centimeters but < 8 centimeters
- (2) ≥ 8 centimeters but < 15 centimeters
- (3) ≥ 15 centimeters but < 30 centimeters
- (4) ≥ 30 centimeters but < 46 centimeters
- (5) ≥ 46 centimeters but < 61 centimeters
- (6) ≥ 61 centimeters
- (7) Catastrophic
- (9) Unknown

DOMINANT CRUSH DIRECTION
- (1) Vertical
- (2) Longitudinal
- (3) Lateral
- (7) Catastrophic
- (9) Unknown

STEERING RIM/SPOKE DEFORMATION

(All Measurements Are in Centimeters)

COMPARISON VALUE	–	DAMAGE VALUE	=	DEFORMATION
0	–	2,5	=	2,5
	–		=	
	–		=	
	–		=	

STEERING COLUMN

87. Steering Column Type — 1
(1) Fixed column
(2) Tilt column
(3) Telescoping column
(4) Tilt and telescoping column
(8) Other column type (specify): _____
(9) Unknown

88. Blank — X X
(This variable is left blank so that numbering consistency can be maintained with the 1988-94 CDS.

89. Blank — X X X
(This variable is left blank so that numbering consistency can be maintained with the 1988-94 CDS.

90. Blank — X X X
(This variable is left blank so that numbering consistency can be maintained with the 1988-94 CDS.

91. Blank — X X X
(This variable is left blank so that numbering consistency can be maintained with the 1988-94 CDS.

92. Steering Rim/Spoke Deformation — 0 3
2.5 Code actual measured deformation to the nearest centimeter
(00) No steering rim deformation
(01-14) Actual measured value in centimeters
(15) 15 centimeters or more
(98) Observed deformation cannot be measured
(99) Unknown

93. Location of Steering Rim/Spoke Deformation — 0 5
(00) No steering rim deformation

Quarter Sections
(01) Section A
(02) Section B
(03) Section C
(04) Section D

Half Sections
(05) Upper half of rim/spoke
(06) Lower half of rim/spoke
(07) Left half of rim/spoke
(08) Right half of rim/spoke

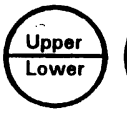

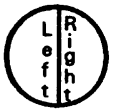

(09) Complete steering wheel collapse
(10) Undetermined location
(99) Unknown

INSTRUMENT PANEL

94. Odometer Reading — ~~999~~,240 ADD 100,000 miles due to age of vehicle
_____kilometers—Code to the nearest 1,000 kilometers
(000) No odometer
(001) Less than 1,500 kilometers
(500) 499,500 kilometers or more
(999) Unknown

149,076 239,908
49,076 miles X 1.6093 = 78,978 kilometers

Source: Inspection

95. Instrument Panel Damage from Occupant Contact? — 1
(0) No
(1) Yes
(9) Unknown

96. Knee Bolsters Deformed from Occupant Contact? — 8
(0) No
(1) Yes
(8) Not present
(9) Unknown

97. Did Glove Compartment Door Open During Collision(s)? — 0
(0) No
(1) Yes
(8) Not present
(9) Unknown

VEHICLE INTERIOR SKETCHES

Note area of ejection/entrapment

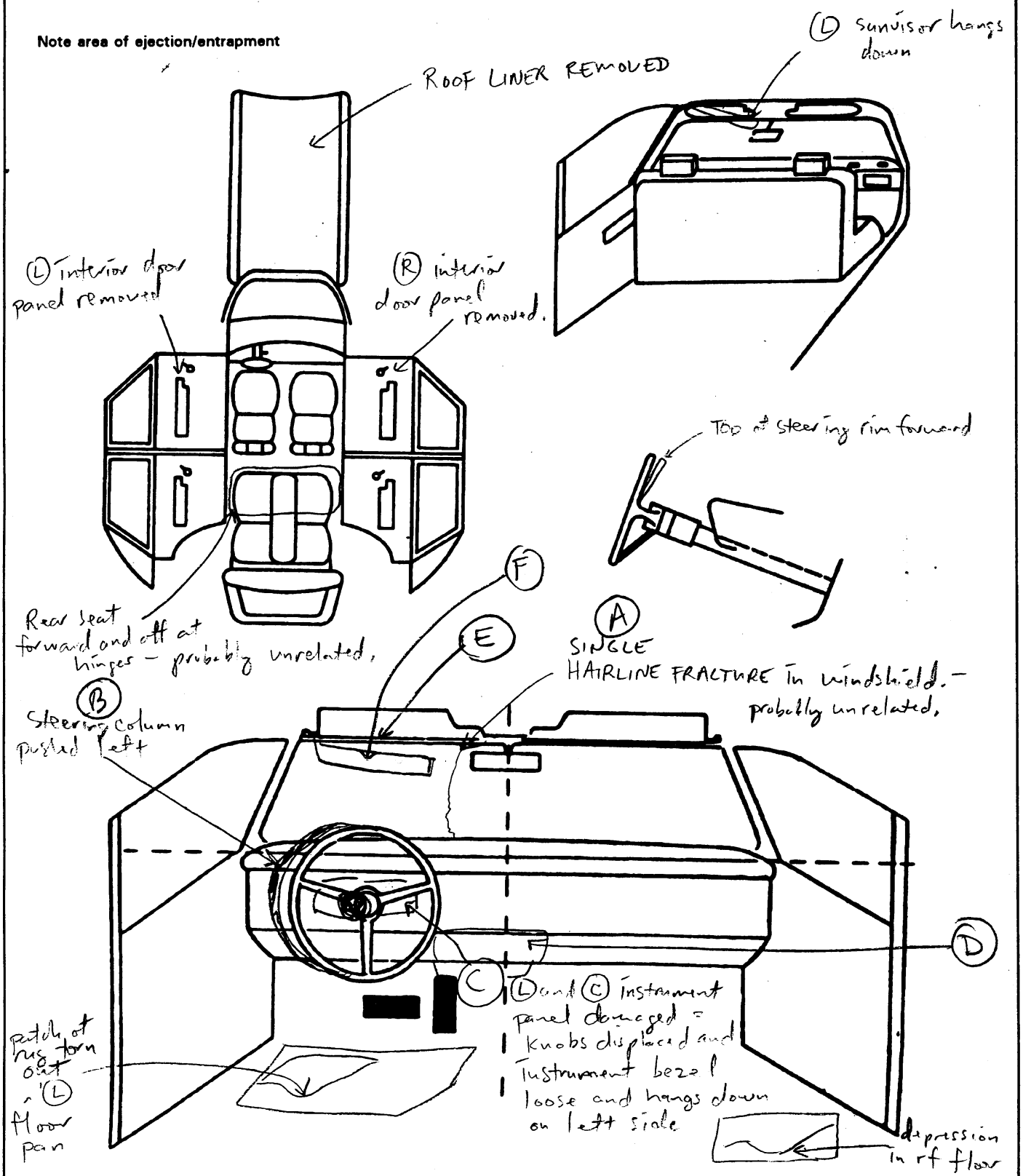

Sketch windshield contact(s) and the damaged area(s) on the instrument panel outline (e.g., radio, glove compartment, damage to instrument panel structure.
Cross hatch contact points, draw spider webs or use other annotation as may be appropriate.
Annotate the contacted area with a letter (begin with A) and list on the Points of Occupant Contact page.

POINTS OF OCCUPANT CONTACT

Contact	Interior Component Contacted	Occupant No. If Known	Body Region If Known	Supporting Physical Evidence	Confidence Level of Contact Point
A	01	01	head/arm	single hairline crack & smudge	
B	06	01	chest	deformation	
C	09	01	knee	breakage	
D	10	01	knee	breakage	
E	50	01	head	visor damage & PTR	
F	19	01	head	deformation/intrusion	
G					
H					
I					
J					
K					
L					
M					
N					

CODES FOR INTERIOR COMPONENTS

FRONT
- (01) Windshield
- (02) Mirror
- (03) Sunvisor
- (04) Steering wheel rim
- (05) Steering wheel hub/spoke
- (06) Steering wheel (combination of codes 04 and 05)
- (07) Steering column, transmission selector lever, other attachment
- (08) Add on equipment (e.g., CB, tape deck, air conditioner)
- (09) Left instrument panel and below
- (10) Center instrument panel and below
- (11) Right instrument panel and below
- (12) Glove compartment door
- (13) Knee bolster
- (14) Windshield including one or more of the following: front header, A (A1/A2)-pillar, instrument panel, mirror, or steering assembly (driver side only)
- (15) Windshield including one or more of the following: front header, A (A1/A2)-pillar, instrument panel, or mirror (passenger side only)
- (16) Driver side air bag compartment cover
- (17) Passenger side air bag compartment cover
- (18) Windshield reinforced by exterior object (specify):_____
- (19) Other front object (specify): (L) visor

LEFT SIDE
- (20) Left side interior surface, excluding hardware or armrests
- (21) Left side hardware or armrest
- (22) Left A (A1/A2)-pillar
- (23) Left B-pillar
- (24) Other left pillar (specify):_____
- (25) Left side window glass or frame
- (26) Left side window glass including one or more of the following: frame, window sill, A (A1/A2)-pillar, B-pillar, or roof side rail.
- (27) Other left side object (specify):_____
- (28) Left side window sill

RIGHT SIDE
- (30) Right side interior surface, excluding hardware or armrests
- (31) Right side hardware or armrest
- (32) Right A (A1/A2)-pillar
- (33) Right B-pillar
- (34) Other right pillar (specify):_____
- (35) Right side window glass or frame
- (36) Right side window glass including one or more of the following: frame, window sill, A (A1/A2)-pillar, B pillar, or roof side rail.
- (37) Other right side object (specify):_____
- (38) Right side window sill

INTERIOR
- (40) Seat, back support
- (41) Belt restraint webbing/buckle
- (42) Belt restraint B-pillar attachment point
- (43) Other restraint system component (specify):_____
- (44) Head restraint system
- (45) Air bag (use codes "16" and "17" for injuries sustained from air bag compartment covers)
- (46) Other occupants (specify):_____
- (47) Interior loose objects
- (48) Child safety seat (specify):_____
- (49) Other interior object (specify):_____

ROOF
- (50) Front header
- (51) Rear header
- (52) Roof left side rail
- (53) Roof right side rail
- (54) Roof or convertible top

FLOOR
- (56) Floor (including toe pan)
- (57) Floor or console mounted transmission lever, including console
- (58) Parking brake handle
- (59) Foot controls including parking brake

REAR
- (60) Backlight (rear window)
- (61) Backlight storage rack, door, etc.
- (62) Other rear object (specify):_____

CONFIDENCE LEVEL OF CONTACT POINT
- (1) Certain
- (2) Probable
- (3) Possible
- (9) Unknown

AUTOMATIC RESTRAINTS

NOTES: Encode the data for each applicable front seat position. The attribute for the variables may be found below. Restraint systems should be assessed during the vehicle inspection then coded on the Occupant Assessment Form.

AIR BAGS

		Left	Right
FIRST	Availability/Function		
	Deployment		
	Failure		

Air Bag System Availability/Function
(0) Not equipped/not available
(1) Air bag

Non-functional
(2) Air bag disconnected (specify): _____
(3) Air bag not reinstalled
(9) Unknown

Air Bag System Deployment
(0) Not equipped/not available
(1) Air bag deployed during accident (as a result of impact)
(2) Air bag deployed inadvertently just prior to accident
(3) Air bag deployed, accident sequence undetermined
(4) Nondeployed
(5) Unknown if deployed
(6) Air bag deployed as a result of a noncollision event during accident sequence (e.g., fire, explosion, electrical)
(9) Unknown

Are There Indications of Air Bag System Failure?
(0) Not equipped/not available
(1) No
(2) Yes (specify): _____
(9) Unknown

AUTOMATIC BELTS

		Left	Right
FIRST	Availability/Function		
	Use		
	Type		
	Proper Use		
	Failure Modes		

Automatic (Passive) Belt System Availability/Function
(0) Not equipped/not available
(1) 2 point automatic belts
(2) 3 point automatic belts
(3) Automatic belts - type unknown

Non-functional
(4) Automatic belts destroyed or rendered inoperative
(9) Unknown

Automatic (Passive) Belt System Use
(0) Not equipped/not available/destroyed or rendered inoperative
(1) Automatic belt in use
(2) Automatic belt not in use (manually disconnected, motorized track inoperative)
(3) Automatic belt use unknown
(9) Unknown

Automatic (Passive) Belt System Type
(0) Not equipped/not available
(1) Non-motorized system
(2) Motorized system
(9) Unknown

Proper Use of Automatic (Passive) Belt System
(0) Not equipped/not available/not used
(1) Automatic belt used properly
(2) Automatic belt used properly with child safety seat

Automatic Belt Used Improperly
(3) Automatic shoulder belt worn under arm
(4) Automatic shoulder belt worn behind back
(5) Automatic belt worn around more than one person
(6) Lap portion of automatic belt worn on abdomen
(7) Automatic lap and shoulder belt or automatic shoulder belt used improperly with child safety seat (specify): _____
(8) Other improper use of automatic belt system (specify): _____
(9) Unknown

Automatic (Passive) Belt Failure Modes During Accident
(0) Not equipped/not available/not in use
(1) No automatic belt failure(s)
(2) Torn webbing (stretched webbing not included)
(3) Broken buckle or latchplate
(4) Upper anchorage separated
(5) Other anchorage separated (specify): _____
(6) Broken retractor
(7) Combination of above (specify):
(8) Other automatic belt failure (specify): _____
(9) Unknown

MANUAL RESTRAINTS

NOTES: Encode the applicable data **for each seat position** in the vehicle. The attribute for the variable may be found below. Restraint systems should be assessed during the vehicle inspection then coded on the Ocupant Assessment Form.

If a Child safety seat is present, encode the data on the back of this page.

If the vehicle has automatic restraints available, encode the appropriate data on the back of the previous page.

		Left	Center	Right
FIRST	Availability	4	3	4
	Evidence of usage	04	00	4
	Used in this crash?	~~04~~ NO	00	00
	Proper Use	1	0	0
	Failure Modes	1	0	0
SECOND	Availability	3		3
	Evidence of usage	03		03
	Used in this crash?	00		00
	Proper Use	0		0
	Failure Modes	0		0
OTHER	Availability			
	Evidence of usage			
	Used in this crash?			
	Proper Use			
	Failure Modes			

Manual (Active) Belt System Availability
- (0) None available
- (1) Belt removed/destroyed
- (2) Shoulder belt
- (3) Lap belt
- (4) Lap and shoulder belt
- (5) Belt available - type unknown

Integral Belt Partially Destroyed
- (6) Shoulder belt (lap belt destroyed/removed)
- (7) Lap belt (shoulder belt destroyed/removed)
- (8) Other belt (specify): _____
- (9) Unknown

Manual (Active) Belt System Use
- (00) None used, not available, or belt removed/destroyed
- (01) Inoperable (specify): _____
- (02) Shoulder belt
- (03) Lap belt
- (04) Lap and shoulder belt
- (05) Belt used - type unknown
- (08) Other belt used (specify): _____
- (12) Shoulder belt used with child safety seat
- (13) Lap belt used with child safety seat
- (14) Lap and shoulder belt used with child safety seat
- (15) Belt used with child safety seat - type unknown
- (18) Other belt used with child safety seat (specify): _____
- (99) Unknown if belt used

Proper Use of Manual (Active) Belts
- (0) None used or not available
- (1) Belt used properly
- (2) Belt used properly with child safety seat

Belt Used Improperly
- (3) Shoulder belt worn under arm
- (4) Shoulder belt worn behind back or seat
- (5) Belt worn around more than one person
- (6) Lap belt worn on abdomen
- (7) Lap belt or lap and shoulder belt used improperly with child safety seat (specify): _____
- (8) Other improper use of manual belt system (specify): _____
- (9) Unknown

Manual (Active) Belt Failure Modes During Accident
- (0) No manual belt used or not available
- (1) No manual belt failure(s)
- (2) Torn webbing (stretched webbing not included)
- (3) Broken buckle or latchplate
- (4) Upper anchorage separated
- (5) Other anchorage separated (specify): _____
- (6) Broken retractor
- (7) Combination of above (specify): _____
- (8) Other manual belt failure (specify): _____
- (9) Unknown

CHILD SAFETY SEAT FIELD ASSESSMENT

When a child safety seat is present enter the occupant's number in the first row and complete the column below the occupant's number using the codes listed below. Complete a column for each child safety seat present.

Occupant Number						
1. Type of Child Safety Seat						
2. Child Safety Seat Orientation						
3. Child Safety Seat Harness Usage						
4. Child Safety Seat Shield Usage						
5. Child Safety Seat Tether Usage						
6. Child Safety Seat Make/Model	Specify Below for Each Child Safety Seat					

1. Type of Child Safety Seat

   (0) No child safety seat
   (1) Infant seat
   (2) Toddler seat
   (3) Convertible seat
   (4) Booster seat
   (7) Other type child safety seat (specify):

   _____

   (8) Unknown child safety seat type
   (9) Unknown if child safety seat used

2. Child Safety Seat Orientation

   (00) No child safety seat

   Designed for Rear Facing for This Age/Weight
   (01) Rear facing
   (02) Forward facing
   (08) Other orientation (specify):

   _____

   (09) Unknown orientation

   Designed for Forward Facing for This Age/Weight
   (11) Rear facing
   (12) Forward facing
   (18) Other orientation (specify):

   _____

   (19) Unknown orientation

   Unknown Design or Orientation For This Age/Weight, or Unknown Age/Weight
   (21) Rear facing
   (22) Forward facing
   (28) Other orientation (specify):

   _____

   (29) Unknown orientation

   (99) Unknown if child safety seat used

3. Child Safety Seat Harness Usage

4. Child Safety Seat Shield Usage

5. Child Safety Seat Tether Usage
   Note: Options Below Are Used for Variables 3-5.

   (00) No child safety seat

   Not Designed with Harness/Shield/Tether
   (01) After market harness/shield/tether added, not used
   (02) After market harness/shield/tether used
   (03) Child safety seat used, but no after market harness/shield/tether added
   (09) Unknown if harness/shield/tether added or used

   Designed With Harness/Shield/Tether
   (11) Harness/shield/tether not used
   (12) Harness/shield/tether used
   (19) Unknown if harness/shield/tether used

   Unknown If Designed With Harness/Shield/Tether
   (21) Harness/shield/tether not used
   (22) Harness/shield/tether used
   (29) Unknown if harness/shield/tether used

   (99) Unknown if child safety seat used

6. Child Safety Seat Make/Model
   (Specify make/model and occupant number)

   _____

   _____

   _____

   _____

HEAD RESTRAINTS/SEAT EVALUATION

NOTES: Encode the applicable data for **each seat position** in the vehicle. The attribute for these variables may be found at the bottom of the page. Head restraint type/damage and seat type/performance should be assessed during the vehicle inspection then coded on the Occupant Assessment Form.

		Left	Center	Right
FIRST	Head Restraint Type/Damage	0	0	0
	Seat Type	05	05	05
	Seat Performance	1	1	1
	Seat Orientation	1	1	1
SECOND	Head Restraint Type/Damage	0	0	0
	Seat Type	03	03	03
	Seat Performance	1	1	1
	Seat Orientation	1	1	1
THIRD	Head Restraint Type/Damage			
	Seat Type			
	Seat Performance			
	Seat Orientation			
OTHER	Head Restraint Type/Damage			
	Seat Type			
	Seat Performance			
	Seat Orientation			

Head Restraint Type/Damage by Occupant at This Occupant Position

(0) No head restraints
(1) Integral — no damage
(2) Integral — damaged during accident
(3) Adjustable — no damage
(4) Adjustable — damaged during accident
(5) Add-on — no damage
(6) Add-on — damaged during accident
(8) Other Specify): _____
(9) Unknown

Seat Type (this Occupant Position)

(00) Occupant not seated or no seat
(01) Bucket
(02) Bucket with folding back
(03) Bench
(04) Bench with separate back cushions
(05) Bench with folding back(s)
(06) Split bench with separate back cushions
(07) Split bench with folding back(s)
(08) Pedestal (i.e., column supported)
(09) Other seat type (specify): _____
(10) Box mounted seat (i.e., van type)
(99) Unknown

Seat Performance (this Occupant Position)

(0) Occupant not seated or no seat rear seat cushion moved forward.
(1) No seat performance failure(s)
(2) Seat adjusters failed
(3) Seat back folding locks or "seat back" failed specify: _____
(4) Seat tracks/anchors failed
(5) Deformed by impact of occupant
(6) Deformed by passenger compartment intrusion (specify): _____
(7) Combination of above (specify): _____
(8) Other (specify): _____
(9) Unknown

Seat Orientation (this Occupant Position)

(0) Occupant not seated or no seat
(1) Forward facing seat
(2) Rear facing seat
(3) Side facing seat (inward)
(4) Side facing seat (outward)
(8) Other (specify): _____
(9) Unknown

DESCRIBE ANY INDICATION OF ABNORMAL OCCUPANT POSTURE (I.E., UNUSUAL OCCUPANT CONTACT PATTERN)

NONE

EJECTION/ENTRAPMENT DATA

Complete the following if the researcher has any indication that an occupant was either ejected from or entrapped in the vehicle. Code the appropriate data on the Occupant Assessment Form.

EJECTION No [X] Yes [ ]

Describe indications of ejection and body parts involved in partial ejection(s):

Occupant Number						
Ejection						
(Note on Vehicle Interior Sketch) Ejection Area						
Ejection Medium						
Medium Status						

Ejection
(1) Complete ejection
(2) Partial ejection
(3) Ejection, Unknown degree
(9) Unknown

Ejection Area
(1) Windshield
(2) Left front
(3) Right front
(4) Left rear
(5) Right rear
(6) Rear
(7) Roof
(8) Other area (e.g., back of pickup, etc.) (specify): _____
(9) Unknown

Ejection Medium
(1) Door/hatch/tailgate
(2) Nonfixed roof structure
(3) Fixed glazing
(4) Nonfixed glazing (specify): _____
(5) Integral structure
(8) Other medium (specify): _____
(9) Unknown

Medium Status (Immediately Prior to Impact)
(1) Open
(2) Closed
(3) Integral structure
(9) Unknown

ENTRAPMENT No [X] Yes [ ]

Describe entrapment mechanism: _____

Component(s): _____

(Note in vehicle interior diagram)

U.S. Department of Transportation
National Highway Traffic Safety Administration

OCCUPANT ASSESSMENT FORM

Form Approved
O.M.B. No. 2127-0021

NATIONAL ACCIDENT SAMPLING SYSTEM
CRASHWORTHINESS DATA SYSTEM

1. Primary Sampling Unit Number: 79
2. Case Number - Stratum: 072 F
3. Vehicle Number: 02
4. Occupant Number: 01

OCCUPANT'S CHARACTERISTICS

5. Occupant's Age: 48
   Code actual age at time of accident.
   (00) Less than one year old (specify by month): _____
   (97) 97 years and older
   (99) Unknown

6. Occupant's Sex: 1
   (1) Male
   (2) Female
   (9) Unknown

7. Occupant's Height: 185
   Code actual height to the nearest centimeter.
   (999) Unknown
   73 inches X 2.54 = 185 centimeters

8. Occupant's Weight: 100
   Code actual weight to the nearest kilogram.
   (999)Unknown
   220 pounds X .4536 = 100 kilograms

9. Occupant's Role: 1
   (1) Driver
   (2) Passenger
   (9) Unknown

OCCUPANT'S SEATING

10. Occupant's Seat Position: 11
    Front Seat
    (11) Left side
    (12) Middle
    (13) Right side
    (14) Other (specify): _____
    (15) On or in the lap of another occupant

    Second Seat
    (21) Left side
    (22) Middle
    (23) Right side
    (24) Other (specify): _____
    (25) On or in the lap of another occupant

    Third Seat
    (31) Left side
    (32) Middle
    (33) Right side
    (34) Other (specify): _____
    (35) On or in the lap of another occupant

    Fourth Seat
    (41) Left side
    (42) Middle
    (43) Right side
    (44) Other (specify): _____
    (45) On or in the lap of another occupant

    (97) In or on unenclosed area
    (98) Other seat (specify): _____
    (99) Unknown

11. Occupant's Posture: 0
    (0) Normal posture

    Abnormal posture
    (1) Kneeling or standing on seat
    (2) Lying on or across seat
    (3) Kneeling, standing or sitting in front of seat
    (4) Sitting sideways or turned to talk with another occupant or to look out a rear window
    (5) Sitting on a console
    (6) Lying back in a reclined seat position
    (7) Bracing with feet or hands on a surface in front of seat
    (8) Other abnormal posture (specify): _____
    (9) Unknown

This report is authorized by P.L. 89-563, Title 1, Section 106, 108, and 112. While you are not required to respond, your cooperation is needed to make the results of this data collection effort comprehensive, accurate, and timely.

EJECTION/ENTRAPMENT

12. Ejection 0
    (0) No ejection
    (1) Complete ejection
    (2) Partial ejection
    (3) Ejection, unknown degree
    (9) Unknown

13. Ejection Area 0
    (0) No ejection
    (1) Windshield
    (2) Left front
    (3) Right front
    (4) Left rear
    (5) Right rear
    (6) Rear
    (7) Roof
    (8) Other area (e.g., back of pickup, etc.) (specify): _____
    (9) Unknown

14. Ejection Medium 0
    (0) No ejection
    (1) Door/hatch/tailgate
    (2) Nonfixed roof structure
    (3) Fixed glazing
    (4) Nonfixed glazing (specify): _____
    (5) Integral structure
    (8) Other medium (specify): _____
    (9) Unknown

15. Medium Status (Immediately Prior To Impact) 0
    (0) No ejection
    (1) Open
    (2) Closed
    (3) Integral structure
    (9) Unknown

16. Entrapment 0
    (NOTE: Entrapped means that part of the person was in the vehicle and mechanically restrained; jammed doors and immobilizing injuries by themselves are not sufficient to constitute entrapment.)
    (0) Not entrapped
    (1) Entrapped
    (9) Unknown

RESTRAINT SYSTEM EVALUATION

17. Manual (Active) Belt System Availability 4
    (0) None available
    (1) Belt removed/destroyed
    (2) Shoulder belt
    (3) Lap belt
    (4) Lap and shoulder belt
    (5) Belt available—type unknown

    Integral Belt Partially Destroyed
    (6) Shoulder belt (lap belt destroyed/removed)
    (7) Lap belt (shoulder belt destroyed/removed)

    (8) Other belt (specify): _____
    (9) Unknown

18. Manual (Active) Belt System Use 04 / 00
    (00) None used, not available, or belt removed/destroyed
    (01) Inoperative (specify): _____
    (02) Shoulder belt
    (03) Lap belt
    (04) Lap and shoulder belt
    (05) Belt used—type unknown
    (08) Other belt used (specify): _____
    (12) Shoulder belt used with child safety seat
    (13) Lap belt used with child safety seat
    (14) Lap and shoulder belt used with child safety seat
    (15) Belt used with child safety seat—type unknown
    (18) Other belt used with child safety seat (specify): _____
    (99) Unknown if belt used

19. Proper Use of Manual (Active) Belts 1 / 0
    (0) None used or not available
    (1) Belt used properly
    (2) Belt used properly with child safety seat

    Belt Used Improperly
    (3) Shoulder belt worn under arm
    (4) Shoulder belt worn behind back or seat
    (5) Belt worn around more than one person
    (6) Lap belt worn on abdomen
    (7) Lap belt or lap and shoulder belt used improperly with child safety seat (specify): _____
    (8) Other improper use of manual belt system (specify): _____
    (9) Unknown

20. Manual (Active) Belt Failure Modes During Accident 1 / 0
    (0) No manual belt used
    (1) No manual belt failure(s)
    (2) Torn webbing (stretched webbing not included)
    (3) Broken buckle or latchplate
    (4) Upper anchorage separated
    (5) Other anchorage separated (specify): _____
    (6) Broken retractor
    (7) Combination of above (specify): _____
    (8) Other manual belt failure (specify): _____
    (9) Unknown

21. Air Bag System Availability/Function 0
    (0) Not equipped/not available
    (1) Air bag

    Non-functional
    (2) Air bag disconnected (specify): _____
    (3) Air bag not reinstalled
    (9) Unknown

22. Air Bag System Deployment 0
    (0) Not equipped/not available
    (1) Air bag deployed during accident (as a result of impact)
    (2) Air bag deployed inadvertently just prior to accident
    (3) Air bag deployed, accident sequence undetermined
    (4) Nondeployed
    (5) Unknown if deployed
    (6) Air bag deployed as a result of a noncollision event during accident sequence (e.g., fire, explosion, electrical)
    (9) Unknown

23. Are There Indications of Air Bag System Failure? 0
    (0) Not equipped/not available
    (1) No
    (2) Yes (specify): _____
    (9) Unknown

    Note: See Variables 44 through 48 (Page 5) for Information on Automatic Belts

24. Police Reported Restraint Use 4
    (0) None used
    (1) Police did not indicate restraint use
    (2) Shoulder belt
    (3) Lap belt
    (4) Lap and shoulder belt
    (5) Belt used, type not specified
    (6) Child safety seat
    (7) Other or automatic restraint (specify): _____
    (8) Restrained, type unknown
    (9) Police indicated "unknown"

HEAD RESTRAINT AND SEAT EVALUATION

25. Head Restraint Type/Damage by Occupant at This Occupant Position: 0
    (0) No head restraints
    (1) Integral—no damage
    (2) Integral—damaged during accident
    (3) Adjustable—no damage
    (4) Adjustable—damaged during accident
    (5) Add-on—no damage
    (6) Add-on—damaged during accident
    (8) Other (specify): _____
    (9) Unknown

26. Seat Type (this Occupant Position): 05
    (00) Occupant not seated or no seat
    (01) Bucket
    (02) Bucket with folding back
    (03) Bench
    (04) Bench with separate back cushions
    (05) Bench with folding back(s)
    (06) Split bench with separate back cushions
    (07) Split bench with folding back(s)
    (08) Pedestal (i.e., column supported)
    (09) Other seat type (specify): _____
    (10) Box mounted seat (i.e., van type)
    (99) Unknown

27. Seat Performance (this Occupant Position): 1
    (0) Occupant not seated or no seat
    (1) No seat performance failure(s)
    (2) Seat adjusters failed
    (3) Seat back folding locks or "seat back" failed (specify): _____
    (4) Seat track/anchors failed
    (5) Deformed by impact of occupant
    (6) Deformed by passenger compartment intrusion (specify): _____
    (7) Combination of above (specify): _____
    (8) Other (specify): _____
    (9) Unknown

CHILD SAFETY SEAT

28. Child Safety Seat Make/Model 0 0 0
(000) No child safety seat
Applicable codes are found in your NASS CDS Data Collection, Coding and Editing
(950) Built-in child safety seat
(997) Other make/model (specify):
_____
(998) Unknown make/model
(999) Unknown if child safety seat used

29. Type of Child Safety Seat 0
(0) No child safety seat
(1) Infant seat
(2) Toddler seat
(3) Convertible seat
(4) Booster seat
(7) Other type child safety seat (specify):
_____
(8) Unknown child safety seat type
(9) Unknown if child safety seat used

30. Child Safety Seat Orientation 0 0
(00) No child safety seat

Designed for Rear Facing for This Age/Weight
(01) Rear facing
(02) Forward facing
(08) Other orientation (specify):
_____
(09) Unknown orientation

Designed For Forward Facing for This Age/Weight
(11) Rear facing
(12) Forward facing
(18) Other orientation (specify):
_____
(19) Unknown orientation

Unknown Design or Orientation For This Age/Weight, or Unknown Age/Weight
(21) Rear facing
(22) Forward facing
(28) Other orientation (specify):
_____
(29) Unknown orientation

(99) Unknown if child safety seat used

31. Child Safety Seat Harness Usage 0 0

32. Child Safety Seat Shield Usage 0 0

33. Child Safety Seat Tether Usage 0 0

Note: Options below applicable to Variables OA31-OA33.
(00) No child safety seat

Not Designed With Harness/Shield/Tether
(01) After market harness/shield/tether added, not used
(02) After market harness/shield/tether used
(03) Child safety seat used, but no after market harness/shield/tether added
(09) Unknown if harness/shield/tether added or used

Designed With Harness/Shield/Tether
(11) Harness/shield/tether not used
(12) Harness/shield/tether used
(19) Unknown if harness/shield/tether used

Unknown If Designed With Harness/Shield/Tether
(21) Harness/shield/tether not used
(22) Harness/shield/tether used
(29) Unknown if harness/shield/tether used

(99) Unknown if child safety seat used

INJURY CONSEQUENCES

34. Injury Severity (Police Rating) 2

(0) O - No injury
(1) C - Possible injury
(2) B - Nonincapacitating injury
(3) A - Incapacitating injury
(4) K - Killed
(5) U - Injury, severity unknown
(6) Died prior to accident
(9) Unknown

35. Treatment - Mortality 9

(0) No treatment
(1) Fatal
(2) Fatal - ruled disease (specify):

_____

Nonfatal
(3) Hospitalization
(4) Transported and released
(5) Treatment at scene - nontransported
(6) Treatment later
(8) Treatment - other (specify):

_____

(9) Unknown

36. Type Of Medical Facility (for Initial Treatment) 9

(0) Not treated at a medical facility
(1) Trauma center
(2) Hospital
(3) Medical clinic
(4) Physician's office
(5) Treatment later at medical facility
(8) Other (specify):

_____

(9) Unknown

37. Hospital Stay 99

(00) Not Hospitalized
_____Code the number of days (up through 60) that the occupant stayed in hospital.
(61) 61 days or more
(99) Unknown

38. Working Days Lost 99

_____Code the number of days (up through 60) that the occupant lost from work due to the accident
(00) No working days lost
(61) 61 days or more
(62) Fatally injured
(97) Not working prior to accident
(99) Unknown

STOP - GO TO VARIABLE 44 ON PAGE 7

VARIABLES 39 THROUGH 43 ARE COMPLETED BY THE ZONE CENTER

39. Time to Death 00

_____Code number of hours from time of accident to time of death up through 24 hours. If time of death is greater than 24 hours, code number of days. (Note: 1 day = 31, 2 days = 32, ... n days = 30 +n up through 30 days = 60)
(00) Not fatal
(96) Fatal - ruled disease
(99) Unknown

40. 1st Medically Reported Cause of Death 00

41. 2nd Medically Reported Cause of Death 00

42. 3rd Medically Reported Cause of Death 00

_____Code the Occupant Injury from line number(s) for the medically reported injury(s) which reportedly contributed to this occupant's death
(00) Not fatal or no additional causes
(96) Mode of death given but specific injuries are not linked to cause of death. (specify):

_____

(97) Other result (includes fatal ruled disease) (specify):

_____

(99) Unknown

43. Number of Recorded Injuries for This Occupant 97

_____Code the actual number of injuries recorded for this occupant.
(00) No recorded injuries
(97) Injured, details unknown
(99) Unknown if injured

AUTOMATIC BELT SYSTEM

44. Automatic (Passive) Belt System Availability/ Function — 0
(0) Not equipped/not available
(1) 2 point automatic belts
(2) 3 point automatic belts
(3) Automatic belts - type unknown

Non-functional
(4) Automatic belts destroyed or rendered inoperative
(9) Unknown

45. Automatic (Passive) Belt System Use — 0
(0) Not equipped/not available/destroyed or rendered inoperative
(1) Automatic belt in use
(2) Automatic belt not in use (manually disconnected, motorized track inoperative) (specify):
(3) Automatic belt use unknown
(9) Unknown

46. Automatic (Passive) Belt System Type — 0
(0) Not equipped/not available
(1) Non-motorized system
(2) Motorized system
(9) Unknown

47. Proper Use of Automatic (Passive) Belt System — 0
(0) Not equipped/not available/not used
(1) Automatic belt used properly
(2) Automatic belt used properly with child safety seat

Automatic Belt Used Improperly
(3) Automatic shoulder belt worn under arm
(4) Automatic shoulder belt worn behind back
(5) Automatic belt worn around more than one person
(6) Lap portion of automatic belt worn on abdomen
(7) Automatic lap and shoulder belt or automatic shoulder belt used improperly with child safety seat (specify):
(8) Other improper use of automatic belt system (specify):
(9) Unknown

48. Automatic (Passive) Belt Failure Modes During Accident — 0
(0) Not equipped/not available/not in use
(1) No automatic belt failure(s)
(2) Torn webbing (stretched webbing not included)
(3) Broken buckle or latchplate
(4) Upper anchorage separated
(5) Other anchorage separated (specify):
(6) Broken retractor
(7) Combination of above (specify):
(8) Other automatic belt failure (specify):
(9) Unknown

49. Seat Orientation (this Occupant Position) — 1
(0) Occupant not seated or no seat
(1) Forward facing seat
(2) Rear facing seat
(3) Side facing seat (inward)
(4) Side facing seat (outward)
(8) Other (specify):
(9) Unknown

Check the Primary Source Used In Determining Belt Use.

[ ] Not equipped/not available/destroyed or rendered inoperative
[X] Vehicle inspection
[ ] Official injury data
[ ] Driver/occupant interview
[ ] Other (specify):
[ ] Unknown if belt used

ARE ALL APPLICABLE MEDICAL RECORDS INCLUDED WITH INITIAL SUBMISSION? NO [ ] YES [X] PAR

NO TRANSPORT / NO INTERVIEW

UPDATE CANDIDATE? NO [X] YES [ ]

STOP - VARIABLES 50 THROUGH 53 ARE COMPLETED BY THE ZONE CENTER

TRAUMA DATA

50. Glasgow Coma Scale (GCS) Score (at Medical Facility) 97
    (00) Not injured
    (01) Injured - not treated at medical facility
    (02) No GCS Score at medical facility
    (03-15) Code the actual value of the initial GCS Score recorded at medical facility.
    (97) Injured, details unknown
    (99) Unknown if injured

51. Was the Occupant Given Blood? 9
    (1) No - blood not given
    (2) Yes - blood given
    (specify units):_____
    (9) Unknown if blood given

52. Arterial Blood Gases (ABG) - HCO_3 97
    (00) Not injured
    (01) Injured, ABGs not measured or reported
    (02-50) Code the actual value of the HCO_3
    (96) ABGs reported , HCO_3 unknown
    (97) Injured, details unknown
    (99) Unknown if injured

BELT USE DETERMINATION

53. Primary Source of Belt Use Determination 1
    (0) Not equipped/not available/destroyed or rendered inoperative
    (1) Vehicle inspection
    (2) Official injury data
    (3) Driver/occupant interview
    (8) Other (specify):_____
    (9) Unknown if belt used

PSU NUMBER 79

CASE NUMBER 072F

VEHICLE NUMBER 02

OCCUPANT NUMBER 01

OCCUPANT INJURY FORM

THE FOLLOWING DATA IS NOT INCLUDED IN THIS CASE:

[✓] ENTIRE FORM

[] PAGE NUMBER (S) _____

U.S. Department of Transportation
National Highway Traffic Safety Administration

OLDMISS PROGRAM SUMMARY

(All Measurements In Metric)

NATIONAL ACCIDENT SAMPLING SYSTEM
CRASHWORTHINESS DATA SYSTEM

Identifying Title

79	072F	01	[redacted] 94
Primary Sampling Unit	Case No.-Stratum	Accident Event Sequence No.	Date (Month, day, year) of Run

OLDMISS Vehicle Identification

	Year	Make	Model	NASS Veh. No.
Vehicle 1	1987	NISSAN	MAXIMA	01
Vehicle 2	1976	CHEVROLET	NOVA	02

GENERAL INFORMATION

VEHICLE 1	VEHICLE 2
Size 3040 lbs - Auto News: 3 ✓	Size: 4
Weight: 1379 (Curb) + 075 (Occupant(s)) + 0 (Cargo) = 1454 ✓ kg	Weight: 1511 (Curb) + 100 (Occupant(s)) + 0 (Cargo) = 1611 kg
Damaged Area of Vehicle (F = Front, L = Left, R = Right, B = Back): F ✓ Vehicle 1	Damaged Area of Vehicle (F = Front, L = Left, R = Right, B = Back): F Vehicle 2
Vehicle Heading Angles At Impact, in Degrees: +070° Vehicle 1	Vehicle Heading Angles At Impact, in Degrees: +260° Vehicle 2
Stiffness Category for Vehicle: 3 ✓ Vehicle 1	Stiffness Category for Vehicle: 4 Vehicle 2

DAMAGE INFORMATION

For Which Vehicle Is The Damage Known: 2

PDOF for Known Vehicle in Degrees (-180 to +180): ~~+000~~ ~~+040~~°

Damage Length (L) for Known Vehicle (CRASH L): 163 cm

Crush Measurements Known Vehicle:

C_1	000 cm
C_2	001 cm
C_3	007 cm
C_4	012 cm
C_5	018 cm
C_6	631 cm

Damage Midpoint Offset for Known Vehicle: D ± ~~000~~ +054 cm

Estimated Damage Midpoint Offset for Unknown Vehicle: D ± 000 +60 cm

Final ZC Rem

SUMMARY OF OLDMISPC RESULTS

79-072f

SPEED CHANGE (DAMAGE)

	RESULTANT MPH (KPH)	LONGITUDINAL MPH (KPH)	LATERAL MPH (KPH)	PDOF DEG
VEH #1 (ESTIMATED)	11.82 (19.02)	-11.64 (-18.73)	-2.05 (-3.30)	10.00
VEH #2 (KNOWN)	10.67 (17.17)	-10.67 (-17.17)	.00 (.00)	.00

	ENERGY FT-LBS (NT-M)	FORCE LBS (NT)
VEH #1 (ESTIMATED)	12714.6 (17237.0)	31976.6 (142232.0)
VEH #2 (KNOWN)	20710.9 (28077.4)	31976.6 (142232.0)

SUMMARY OF DAMAGE DATA

	VEHICLE #1 (ESTIMATED DAMAGE DIMENSION) IN	(CM)	VEHICLE #2 (KNOWN DAMAGE DIMENSION) IN	(CM)
L----------	63.2	160.5	64.2	163.0
C1---------	8.1	20.5	.0	.0
C2---------	5.0	12.6	.4	1.0
C3---------	3.5	9.0	2.8	7.0
C4---------	2.4	6.0	4.7	12.0
C5---------	.9	2.4	7.1	18.0
C6---------	.7	1.7	12.2	31.0
D----------	4.7	11.9	21.3	54.0

(DOFF ADJUSTED -18.9 INCHES
TO MATCH VEHICLE DIMENSION)

VEHICLE INFORMATION

VEHICLE #1 (FRONT DAMAGE UNKNOWN)		VEHICLE #2 (FRONT DAMAGE KNOWN)	
SIZE------	3	SIZE------	4
STIFFNESS-	3	STIFFNESS-	4
SIDE------	F	SIDE------	F
HANGL-----	70.0 DEG	HANGL-----	260.0 DEG
WEIGHT----	3205.5 LBS (1453.7 KG)	WEIGHT----	3551.6 LBS (1610.7 KG)
MASS------	8.296 LB-SEC**2/IN	MASS------	9.192 LB-SEC**2/IN
	(93.72 NT-SEC**2/CM)		(103.85 NT-SEC**2/CM)
RADIUS GYRATION--	3324.0 IN**2	RADIUS GYRATION--	3741.0 IN**2
	(21445.1 CM**2)		(24135.4 CM**2)

Printing Picture: OLDMIS

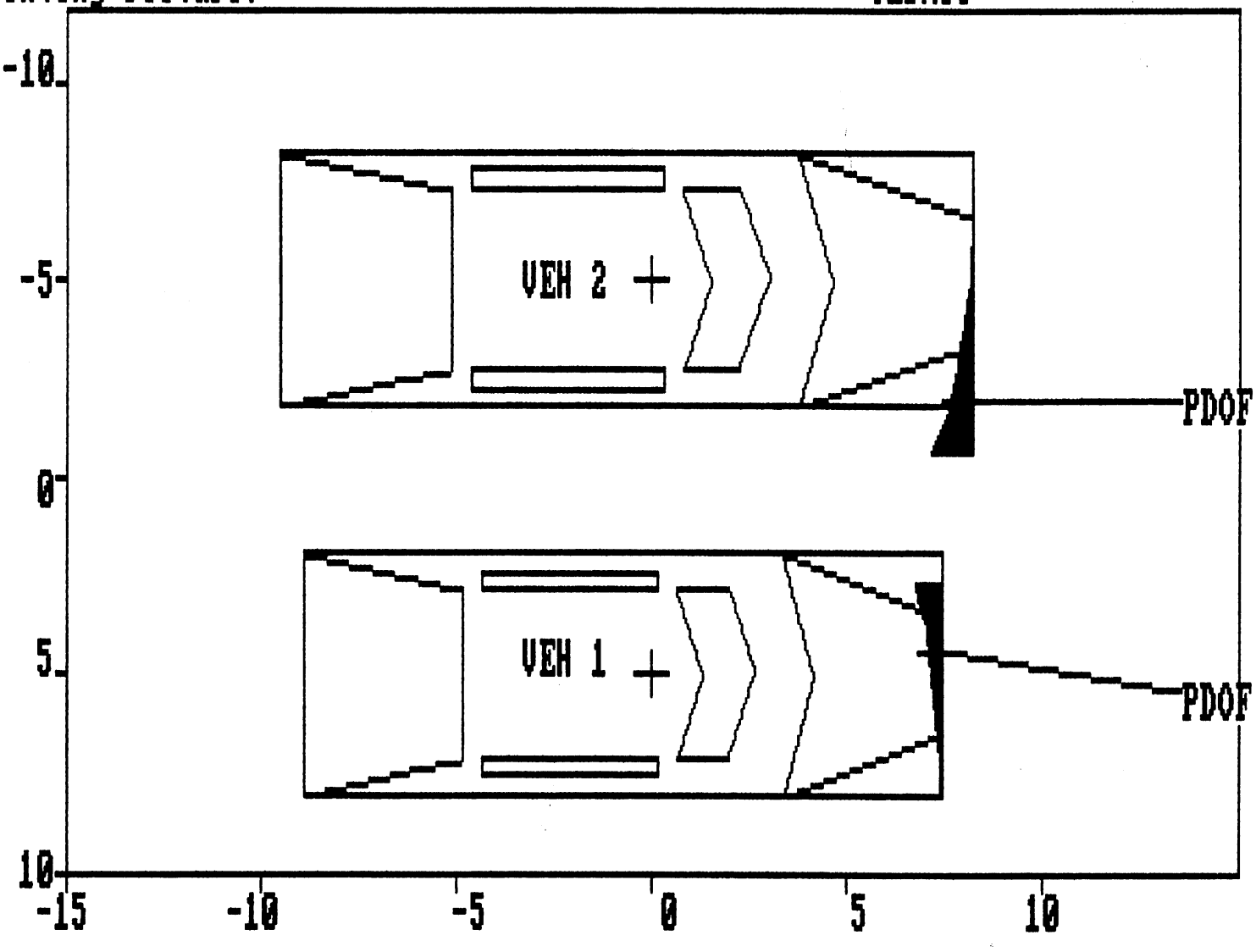

DAMAGE DESCRIPTION: VEHICLE 2 KNOWN

79072F00000011[redacted]947.0000000000000207550000002[redacted]94[redacted]94[redacted]94[redacted]94001523000
109276000166427
79072F00010012[redacted]947.0010000000000102F0204F
79072F00020012[redacted]947.0010000000000102L3100N
79072F01000021 7.00 0000000008735039029999999999999999919990960569950101011
389990003900702603019-019-0020172400
79072F01000022 7.00 00000000000000000000000000000[redacted]90313182991099
79072F01010051 7.00 00000000032118307511199999949999999499990000000000000242
009900000000979999999979979
79072F02000021 7.00 0000000007620008021X27D6K1180[redacted] 19990960569951101011
510000000902600703017-017 0000290410
79072F02000022 7.00 00000000000000000000000000000[redacted]90000000016299
79072F02000031 7.00 000000000010112FREW02 163000001007012018031+
054 01282000101010101001000
79072F02000041 7.00 00000000000130000000000000008800000000000000000000000000
79072F02000042 7.00 000000000130511
1 0305240180
79072F02010051 7.00 00000000048118510011100000040000000400510000000000000299
99990000000097000001979971
79072F99999999000000000000000000000000000000000000010000000000000000000000000000000
00000000000000

GENERAL VEHICLE Vehicle: 1
11
INTRA ERRORS

0GG0421 2 If ROLLOVER GV24 equals 1-9, then BASIS FOR DELTA V GV29 should
GG0422 equal 4 or 5.

0

PSU79 ERROR SUMMARY SCREEN final [redacted]/94
CASE 072F
CURRENT VERSION: 7.00

FORM NAME	NUMBER OF DOLLAR SIGNS	NUMBER OF LEVEL 1 ERRORS	NUMBER OF LEVEL 2 ERRORS	VERSION NUMBER CONSISTENT
Accident	0	0	0	Y
General Vehicle	0	0	1	Y
Vehicle Exterior	0	0	0	Y
Vehicle Interior	0	0	0	Y
Occupant Assesment	0	0	0	Y
Occupant Interior	0	0	0	Y
Total Inter Errors		0	0	
Total Case Errors	0	0	1	

U.S. Department of Transportation
National Highway Traffic Safety Administration

SLIDE INDEX

NATIONAL ACCIDENT SAMPLING SYSTEM
CRASHWORTHINESS DATA SYSTEM

Primary Sampling Unit Number 79 Case Number—Stratum 0 7 2 F

Slide No.	Vehicle No.	Direction of Picture	Description of Slide Subject Matter
1-20			Scene slides
1		west	Reference line and Reference Point
2		South	Reference Point
3-7	V-1	east	V-1 approach = direction of travel
8	V-1	east	Point of impact # 1 = V-1 d.o.t.
9	V-1	north east	V-1 final rest position = d.o.t.
10	V-1	west	V-1 opposite view
11	V-1	west	P.O.I # 1 = V-1 opposite view
12	V-1	south west	V-1 f.r.p = opposite view
13-15	V-2	west	V-2 approach
16	V-2	west	P.O.I. # 1 = V-2 d.o.t.
17	V-2	southwest	V-2 f.r.p = d.o.t.
18	V-2	east	V-2 opposite view
19	V-2	east	P.O.I # 1 = V-2 opposite view
20	V-2	north east	V-2 f.r.p = opposite view.
21-47	V-2		V-2 EXTERIOR
22-42	V-2		c-stand gauges set at mid front bumper (V-2)
23,24	V-2		V-2 windshield crack
40	V-2		V-2 right front door latch area
41	V-2		V-2 right front door latch (closeup)
42-46	V-2		V-2 c-stand gauges set above front bumper
47	V-2		V-2 fuel filler cap location
48-75	V-2		V-2 INTERIOR
53	V-2		V-2 steering column seen thru windshield
55	V-2		V-2 windshield crack
56	V-2		V-2 top of steering rim and dashboard edge
57	V-2		V-2 instrument panel bezel

HS Form 434B (1/94)

Slide No.	Vehicle No.	Direction of Picture	Description of Slide Subject Matter
58	V-2		(L) Instrument panel and (L) toe pan area
59	V-2		(L) & (C) Instrument panel damage
63	V-2		RF toe pan area
73	V-2		Rear seatback = center portion

PSU 79-072F (1994) #1

PSU 79-072F (1994) #2

PSU 79-072F (1994) #3

PSU 79-072F (1994) #4

PSU 79-072F (1994) #5

PSU 79-072F (1994) #6

PSU 79-072F (1994) #7

PSU 79-072F (1994) #8

PSU 79-072F (1994) #9

PSU 79-072F (1994) # 10

PSU 79-072F (1994) #11

PSU 79-072F (1994) #12

PSU 79-072F (1994) #13

PSU 79-072F (1994) #14

PSU 79-072F (1994) #15

PSU 79-072F (1994) #16

PSU 79-072F (1994) #17

PSU 79-072F (1994) #18

PSU 79-072F (1994) #19

PSU 79-072F (1994) #20

PSU 79-072F (1994) #21

PSU 79-072F (1994) #22
Best Available

PSU 79-072F (1994) #23
Best Available

PSU 79-072F (1994) #24
Best Available

PSU 79-072F (1994) #25
Best Available

PSU 79-072F (1994) #26
Best Available

PSU 79-072F (1994) #27
Best Available

PSU 79-072F (1994) #28
Best Available

PSU 79-072F (1994) #29
Best Available

PSU 79-072F (1994) #30
Best Available

PSU 79-072F (1994) #31
Best Available

PSU 79-072F (1994) #32
Best Available

PSU 79-072F (1994) #33
Best Available

PSU 79-072F (1994) #34
Best Available

PSU 79-072F (1994) #35
Best Available

PSU 79-072F (1994) #36
Best Available

PSU 79-072F (1994) #37
Best Available

PSU 79-072F (1994) #38
Best Available

PSU 79-072F (1994) #39
Best Available

PSU 79-072F (1994) #40

PSU 79-072F (1994) #41
Best Available

PSU 79-072F (1994) #42

PSU 79-072F (1994) #43

PSU 79-072F (1994) #44
Best Available

PSU 79-072F (1994) #45
Best Available

PSU 79-072F (1994) #46
Best Available

PSU 79-072F (1994) #47

PSU 79-072F (1994) #48
Best Available

PSU 79-072F (1994) #49
Best Available

PSU 79-072F (1994) #50
Best Available

PSU 79-072F (1994) #51
Best Available

PSU 79-072F (1994) #52

PSU 79-072F (1994) #53
Best Available

PSU 79-072F (1994) #54
Best Available

PSU 79-072F (1994) #55
Best Available

PSU 79-072F (1994) #56
Best Available

PSU 79-072F (1994) #57
Best Available

PSU 79-072F (1994) #58
Best Available

PSU 79-072F (1994) #59
Best Available

PSU 79-072F (1994) #60
Best Available

PSU 79-072F (1994) #61

PSU 79-072F (1994) #62
Best Available

PSU 79-072F (1994) #63
Best Available

PSU 79-072F (1994) #64
Best Available

PSU 79-072F (1994) #65
Best Available

PSU 79-072F (1994) #66

PSU 79-072F (1994) #67

PSU 79-072F (1994) #68

PSU 79-072F (1994) #69

PSU 79-072F (1994) #70

PSU 79-072F (1994) #71
Best Available

PSU 79-072F (1994) #72
Best Available

PSU 79-072F (1994) #73

PSU 79-072F (1994) #74
Best Available

PSU 79-072F (1994) #75