U.S. Department
of Transportation

**National Highway
Traffic Safety
Administration**

400 Seventh Street, S.W.
Washington, D.C. 20590

Dear Crash Data Researchers/Users:

Thank you for choosing crash data from the National Highway Traffic Safety Administration (NHTSA) for your research or other use. The information contained in this motor vehicle crash report is collected, maintained and distributed in accordance with Public Law 89-564. In accordance with this Public Law, NHTSA is required not to release any case information until completion of quality control procedures. These procedures include a review of the case material to extract all names, licenses and registration numbers, non-coded interview material, non-research related researcher comments in the margins, non-factual data, and the production number portion of the vehicle identification number (VIN).

If you requested NHTSA to query its database files in order to identify a specific crash, then that query was made using non-personal descriptors you provided for use in our search. This motor vehicle crash may have been identified from a data search and matches the general, non-personal descriptors you provided, but we cannot confirm that this is the specific crash report you requested.

If you have any questions with regard to the above procedures, please contact the Field Operations Branch, Crash Investigation Division, National Center for Statistics and Analysis at 202-366-4820. Again, please be advised that we cannot confirm that this is the case that you have specifically requested nor can we certify the information to be correct.

*** *** ***

Get it together!
SAFETY BELTS SAVE LIVES

AUTO SAFETY HOTLINE
(800) 424-9393
Wash. D.C. Area 366-0123

U.S. Department of Transportation
National Highway Traffic Safety Administration

CASE SUMMARY

NATIONAL ACCIDENT SAMPLING SYSTEM
CRASHWORTHINESS DATA SYSTEM

PSU 51 CASE NO. Ø42C TYPE OF ACCIDENT car-car / right angle

A. DESCRIPTION OF THE ACCIDENT SEQUENCE AND ACCIDENT PECULIARITIES

(Provide a summary of the accident sequence as well as any particular event of the accident that is noteworthy. Injury mechanism and vehicle crashworthiness is the focus, not driver culpability. **Do not include any personal identifiers.** Use reverse side if needed.)

V1 was Westbound. V2 was southbound. V1 front impacted V2 Left side. V1 spun CCW upon impact and impacted curb in southwest corner of the intersection. V1 then overrode a natural Gas meter, impacted a utility pole with the R. rear bumper, and rotated CCW to impact a 2½" Stop sign pole. Business owner stated that the stop sign pole was bent about 45°, but not laying down after the impact. V1 rear wheels apparently continued turning after FRP, because there →

B. VEHICLE PROFILE(S)

Vehicle No.	Class of Vehicle	Year/Make/Model	Most Severe Damage		Component Failure
			Damage Plane	Severity Description	
Ø1	Largest	'73/Chevy/Catalina	Front	Moderate	front seat backs
Ø2	Compact	'84/Chevy/Blazer	Left/Top	Moderate	All Glazing

C. PERSON PROFILE(S)

Vehicle No.	Person Role	Seat Position	Restraint Use	Most Severe Injury			
				Body Region	Lesion	AIS	Injury Source
Ø1	Driver	front/left	None	"			"
Ø1	Passenger	front/center	None	" not	injured	"	
Ø1	Passenger	front/right	None	"		"	
Ø2	Driver	front/left	lap & shoulder	Shoulder	contusion	1	shoulder belt
Ø2	Passenger	front/right	lap & shoulder	Arm	Lac.	1	flying Glass
Ø2	Passenger	back/right	lap	Elbow	FX	3	lap belt

DO NOT SANITIZE THIS FORM

HS Form 434A
1/88

was rotating tire damage from fender contact after final Pole impact. V2 began a ccw Yaw after impact with V1, and impacted curb along the west road edge and rolled 2 quarter turns, coming to FRP Approx. 100' feet from impact Ø1.

U.S. Department of Transportation
National Highway Traffic Safety Administration

NATIONAL ACCIDENT SAMPLING SYSTEM
CRASHWORTHINESS DATA SYSTEM

BEST AVAILABLE

ACCIDENT COLLISION DIAGRAM

PSU No. 51
Case Number–Stratum 042C

Scale = 1"-20'

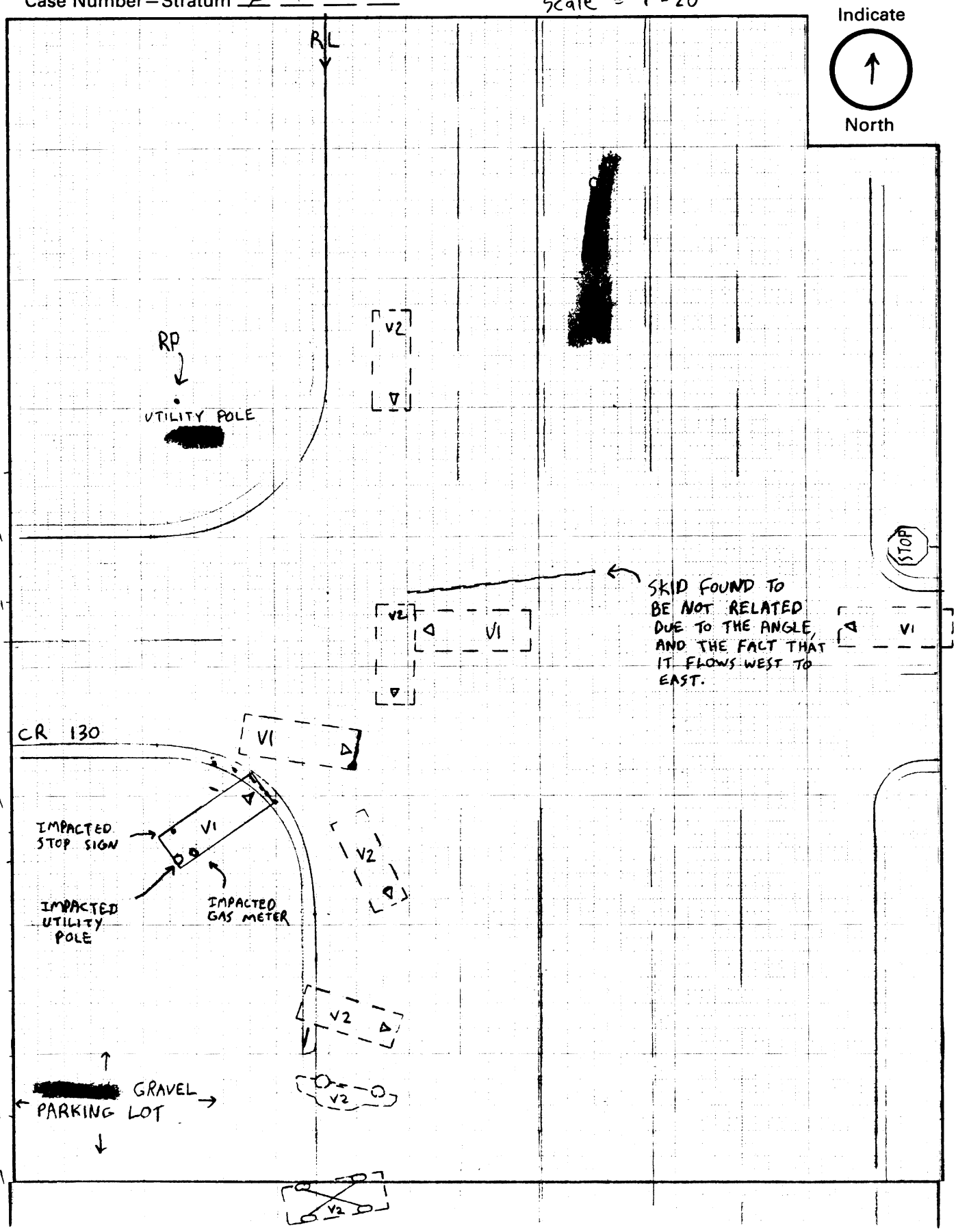

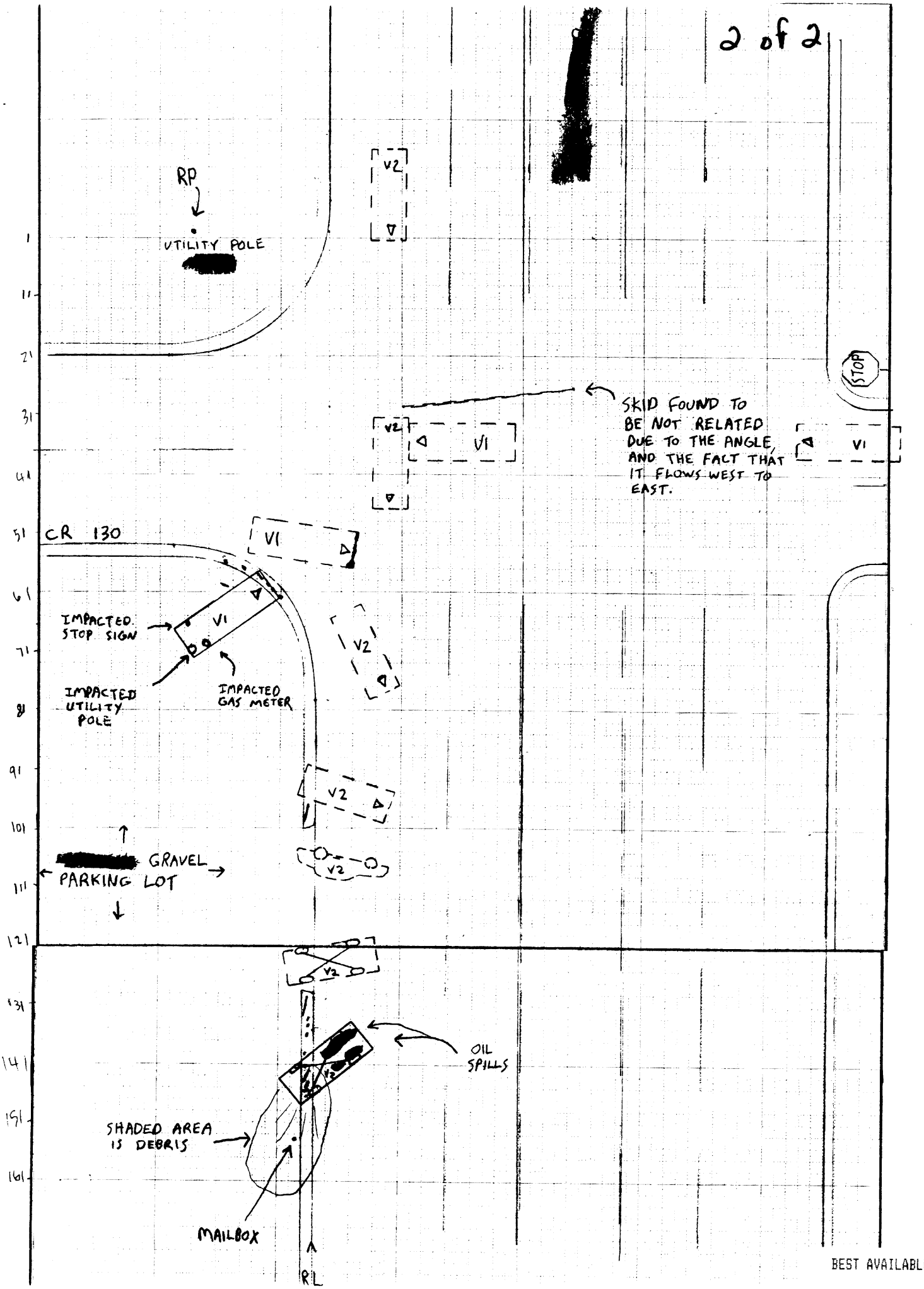

BEST AVAILABLE

U.S. Department of Transportation
National Highway Traffic Safety Administration

ACCIDENT COLLISION MEASUREMENT TABLE

NATIONAL ACCIDENT SAMPLING SYSTEM
CRASHWORTHINESS DATA SYSTEM

Primary Sampling Unit Number 51 Case Number–Stratum 042C

ACCIDENT COLLISION DIAGRAM

LEVEL I
PHYSICAL EVIDENCE ABSENT

To be accomplished when there is no physical evidence present at the scene:

*approximate vehicle orientation at impact and final rest

*applicable road/roadway delineation (e.g., curbs/edge lines, lane markings, median markings, pavement markings, etc.)

*applicable traffic controls (e.g., speed limit)

*north arrow placed on diagram

*sketch required

LEVEL II
PHYSICAL EVIDENCE PRESENT

In addition to the Level I tasks noted above, the following must be

LEVEL II (Cont'd)
accomplished when physical evidence is present:

*document reference point and reference line relative to physical features present at the scene

*scaled documentation of all accident induced physical evidence

*scaled documentation of all roadside objects contacted

*roadway surface type and condition of applicable roadways

*grade measurements for all applicable roadways

*scaled representations of the vehicle(s) at pre-impact, impact, and final rest based upon either:

a) physical evidence, or

b) reconstructed accident dynamics

CRASH DATA

	VEH. #1	VEH. #2	VEH. #3
Heading Angle	270	180	
Surface Type	Asphalt	"	
Surface Condition	dry	dry	
Grade Measurement (v/h)	0	0	

Reference Point: [redacted]

Reference Line: [redacted]

Item	Distance and Direction from Reference Point	Distance and Direction from Reference Line
Beg radius	5.8 N	0
End radius	21.1 S	26.6 W
End skid	26.5 S	40.3 E
North Rd Edge 130	29.6 S	0
Beg skid	29.6 S	12.2 E
Beg radius	53.5 S	25.9 W
Curb striation 1	55.8 S	12.0 W
Curb striation 2	57.0 S	14.2 W
Beg tire mark (curb)	58.3 S	12.0 W
End tire mark	58.9 S	11.1 W
LR mounts curb	59.7 S	10.2 W
Curb striation 3	60.6 S	9.5 W

HS Form 431A
1/88

Item	Distance and Direction from Reference Point	Distance and Direction from Reference Line
Curb striation 4	61.9 S	7.8 W
End radius	79.4 S	0
Beg abraded curb	97.1 S	1.4 W
End abraded curb	99.8 S	1.9 W
Beg driveway	100.6 S	0
End driveway	129.0 S	0
Beg abraded curb	129.7 S	1.6 W
End abraded curb	132.9 S	1.9 W
Striation #1	133.2 S	1.2 W
Striation #2	134.0 S	1.2 W
Beg oil spill 1	135.0 S	6.8 E
Striation #3	136.0 S	1.3 W
Beg oil spill 2	137.8 S	7.9 E
Striation #4	139.1 S	1.5 W
End oil spill 1	139.0 S	1.6 E
Curb striation 5	141.2 S	1.5 W
Beg debris	141.2 S	0
End oil spill 2	141.3 S	3.0 E
Beg abraded curb	142.4 S	1.1 W
End abraded curb	143.8 S	1.9 W
Curb striation 6	144.5 S	1.5 W
Curb striation 7	145.3 S	1.5 W
Curb striation 8	146.3 S	1.5 W
Mailbox	155.7 S	3.0 W
End debris	155.7 S	0
Stop sign pole	66.7 S	21.8 W
Gas meter	69.2 S	18.8 W
Utility Pole	70.5 S	21.0 W
Gouge	59.7 S	15.7 W

U.S. Department of Transportation
National Highway Traffic Safety Administration

EXTERIOR VEHICLE FORM

NATIONAL ACCIDENT SAMPLING SYSTEM
CRASHWORTHINESS DATA SYSTEM

1. Primary Sampling Unit Number: 51
2. Case Number–Stratum: 042C
3. Vehicle Number: 01

VEHICLE IDENTIFICATION

VIN: 2L57R3[redacted] Model Year: 1973

Vehicle Make (specify): Pontiac Vehicle Model (specify): Catalina

LOCATOR

Locate the end of the damage with respect to the vehicle longitudinal center line or bumper corner for end impacts or an undamaged axle for side impacts.

Specific Impact No.	Location of Direct Damage	Location of Field L
01	Entire front and 20.5 down (R) side	front bumper (estimated location)
02	12" ahead of LR Axle ahead 1.3"	9" ahead of LR Axle ahead 45.7
03	8.5 (R) of RR BC to (L) 8"	rear bumper

Front bumper came off during impact. Measurements were made to determine where the bumper was just prior to disengaging.

CRUSH PROFILE

NOTES: Identify the plane at which the C-measurements are taken (e.g., at bumper, above bumper, at sill, above sill, etc.) and label adjustments (e.g., free space).

Measure and document on the vehicle diagram the location of maximum crush.

Measure C1 to C6 from driver to passenger side in front or rear impacts and rear to front in side impacts.

Free space value is defined as the distance between the baseline and the original body contour taken at the individual C locations. This may include the following: bumper lead, bumper taper, side protrusion, side taper, etc. Record the value for each C-measurement and maximum crush.

Use as many lines/columns as necessary to describe each damage profile.

Specific Impact Number	Plane of C-Measurements	Direct Damage Width (CDC)	Direct Damage C6 Max Crush	Field L	C1	C2	C3	C4	C5	MAX C6	±D
01	front bumper	74.5	8.0	74.5	8.0	7.9	7.9	7.8	7.9	8.0	0
	freespace				3.5	3.0	1.1	1.1	3.0	3.5	
			.9 ahead of C3								
02	Max extension (L) side	1.3	2.3	45.7	0	.2	.7	.5	.1	0	-30.2
	freespace		0		0	0	0	0	0	0	
			1.4 ahead of C5								
03	Rear bumper	9.5	6.5	69.6	0	0	.1	1.9	6.4	0	0
	freespace		1.5		.5	1.5	1.2	1.2	1.4	.5	

HS Form 435A
1/88

VEHICLE DAMAGE SKETCH

TIRE—WHEEL DAMAGE

a. Rotation physically restricted		b. Tire deflated	
RF	2	RF	2
LF	1	LF	2
RR	2	RR	1
LR	1	LR	2

(1) Yes (2) No (8) NA (9) Unk.

TYPE OF TRANSMISSION

☐ Manual ☑ Automatic

ORIGINAL SPECIFICATIONS

Wheelbase	124.0
Overall Length	224.8
Maximum Width	79.6
Curb Weight	4326
Average Track	64.1
Front Overhang	
Rear Overhang	
Engine Size: cyl./ displ.	
Undeformed End Width	74.5

WHEEL STEER ANGLES
(For locked front wheels or displaced rear axles only)

RF ± 00 °
LF ± 05 °
RR ± 00 °
LR ± 00 °
Within ±5 degrees

DRIVE WHEELS

☐ FWD ☑ RWD ☐ 4WD

Approximate Cargo Weight 50 lbs.

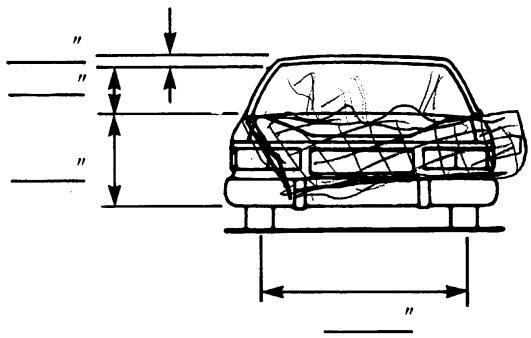

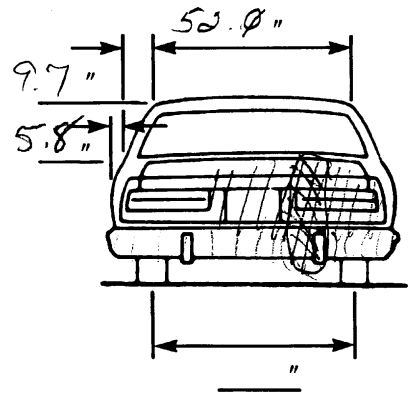

Entire Car is Primered and Sanded

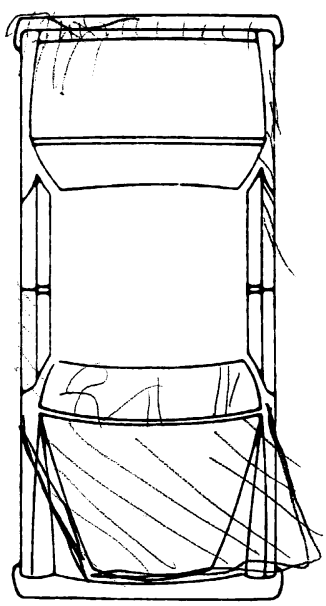

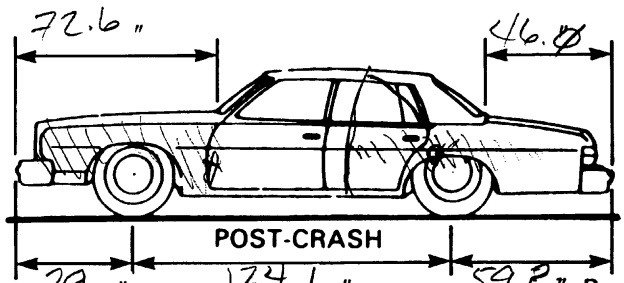

Bumper corner 29 " 59.2" Bumper corner
Stringline 41.1" 59.7" Stringline

DP extended 20 1/2" in (R) side

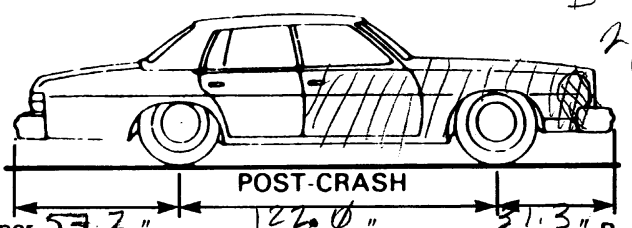

Bumper corner 57.2" 21.3" Bumper corner
Stringline 57.7" 43.8" Stringline

NOTES: Sketch new perimeter and cross hatch direct damage and single hatch induced damage on all views. Annotate observations which might be useful in reconstructing the accident (e.g., grass in tire bead, direction of striations, scuff on sidewall, etc.). If pulling trailer, sketch type of trailer and damage received on the back of this page.
Annotate any damage caused by extrication such as component removal by torching, prying, or hydraulic shears.

CDC WORKSHEET

CODES FOR OBJECT CONTACTED

01-30—Vehicle Number

Noncollision
- (31) Overturn—rollover
- (32) Fire or explosion
- (33) Jackknife
- (34) Other intraunit damage (specify): _____
- (35) Noncollision injury
- (38) Other noncollision (specify): _____
- (39) Noncollision—details unknown

Collision with Fixed Object
- (41) Tree (≤4 inches in diameter)
- (42) Tree (>4 inches in diameter)
- (43) Shrubbery or bush
- (44) Embankment
- (45) Breakaway pole or post (any diameter)

Nonbreakaway Pole or Post
- (50) Pole or post (≤4 inches in diameter)
- (51) Pole or post (>4 but ≤12 inches in diameter)
- (52) Pole or post (>12 inches in diameter)
- (53) Pole or post (diameter unknown)
- (54) Concrete traffic barrier
- (55) Impact attenuator
- (56) Other traffic barrier (specify): _____
- (57) Fence
- (58) Wall
- (59) Building
- (60) Ditch or Culvert
- (61) Ground
- (62) Fire hydrant
- (63) Curb
- (64) Bridge
- (68) Other fixed object (specify): natural gas meter
- (69) Unknown fixed object

Collision With Nonfixed Object
- (71) Motor vehicle not in transport
- (72) Pedestrian
- (73) Cyclist or cycle
- (74) Other nonmotorist or conveyance (specify): _____
- (75) Vehicle occupant
- (76) Animal
- (77) Train
- (78) Trailer, disconnected in transport
- (88) Other nonfixed object (specify): _____
- (89) Unknown nonfixed object
- (98) Other event (specify): _____
- (99) Unknown event or object

DEFORMATION CLASSIFICATION BY EVENT NUMBER

Accident Event Sequence Number	Object Contacted	(1) (2) Direction of Force (degrees)	Incremental Value of Shift	(3) Deformation Location	(4) Specific Longitudinal or Lateral Location	(5) Specific Vertical or Lateral Location	(6) Type of Damage Distribution	(7) Deformation Extent
01	02	060	20	F	D	E	W	01
02	63	090	00	R	B	W	N	02
02	63	090	00	R	F	W	N	02
03	68	180	00	U	R	E	S	01
04	51	180	00	B	R	E	N	01
05	50	270	00	L	P	M	N	01

US Department of Transportation
National Highway Traffic Safety Administration

INTERIOR VEHICLE FORM

NATIONAL ACCIDENT SAMPLING SYSTEM
CRASHWORTHINESS DATA SYSTEM

1. Primary Sampling Unit Number 5 1
2. Case Number – Stratum 0 4 2 C
3. Vehicle Number 0 1

INTEGRITY

4. Passenger Compartment Integrity 0 0

(00) No integrity loss

Yes, Integrity Was Lost Through
(01) Windshield
(02) Door (side)
(03) Door/hatch (rear)
(04) Roof
(05) Roof glass
(06) Side window
(07) Rear window
(08) Roof and roof glass
(09) Windshield and door (side)
(10) Windshield and roof
(11) Side and rear window
(98) Other combination of above (specify): _____
(99) Unknown

Door, Tailgate Or Hatch Opening

5. LF 1 6. RF 1 7. LR 0 8. RR 0 9. TG/H 0

(0) No door/gate/hatch
(1) Door/gate/hatch remained closed and operational
(2) Door/gate/hatch came open during collision
(3) Door/gate/hatch jammed shut
(8) Other (specify): _____
(9) Unknown

Damage/Failure Associated with Door, Tailgate or Hatch Opening in Collision. If IV05-IV09 ≠ 2, Then Code 0.

10. LF 0 11. RF 0 12. LR 0 13. RR 0 14. TG/H 0

(0) No door/gate/hatch or door not opened

Door, Tailgate, or Hatch Came Open During Collision
(1) Door operational (no damage)
(2) Latch/striker failure due to damage
(3) Hinge failure due to damage
(4) Door structure failure due to damage
(5) Door support (i.e., pillar, sill, roof side rail, etc.) failure due to damage
(6) Latch/striker and hinge failure due to damage
(8) Other failure (specify): _____
(9) Unknown

GLAZING

Glazing Damage from Impact Forces

15. WS 2 16. LF 0 17. RF 0 18. LR 0 19. RR 0
20. BL 0 21. Roof 8 22. Other 6

(0) No glazing damage from impact forces
(2) Glazing in place and cracked from impact forces
(3) Glazing in place and holed from impact forces
(4) Glazing out-of-place (cracked or not) and not holed from impact forces
(5) Glazing out-of-place and holed from impact forces
(6) Glazing disintegrated from impact forces
(7) Glazing removed prior to accident
(8) No glazing
(9) Unknown if damaged

Glazing Damage from Occupant Contact

23. WS 0 24. LF 0 25. RF 1 26. LR 0 27. RR 1
28. BL 0 29. Roof 0 30. Other 0

(0) No occupant contact to glazing or no glazing
(1) Glazing contacted by occupant but no glazing damage
(2) Glazing in place and cracked by occupant contact
(3) Glazing in place and holed by occupant contact
(4) Glazing out-of-place (cracked or not) by occupant contact and not holed by occupant contact
(5) Glazing out-of-place by occupant contact and holed by occupant contact
(6) Glazing disintegrated by occupant contact
(9) Unknown if contacted by occupant

If No Glazing Damage ***And*** No Occupant Contact or No Glazing, Then Code IV 31 Through IV 46 As 0

Type of Window/Windshield Glazing

31. WS 1 32. LF 0 33. RF 2 34. LR 0 35. RR 2
36. BL 0 37. Roof 0 38. Other 0

(0) No glazing contact and no damage, or no glazing
(1) AS-1 – Laminated
(2) AS-2 – Tempered
(3) AS-3 – Tempered-tinted
(4) AS-14 – Glass/Plastic
(8) Other (specify): _____
(9) Unknown

Window Precrash Glazing Status

39. WS 1 40. LF 0 41. RF 2 42. LR 0 43. RR 2
44. BL 0 45. Roof 0 46. Other 0

(0) No glazing contact and no damage, or no glazing
(1) Fixed
(2) Closed
(3) Partially opened
(4) Fully opened
(9) Unknown

INTRUSION WORK SHEET

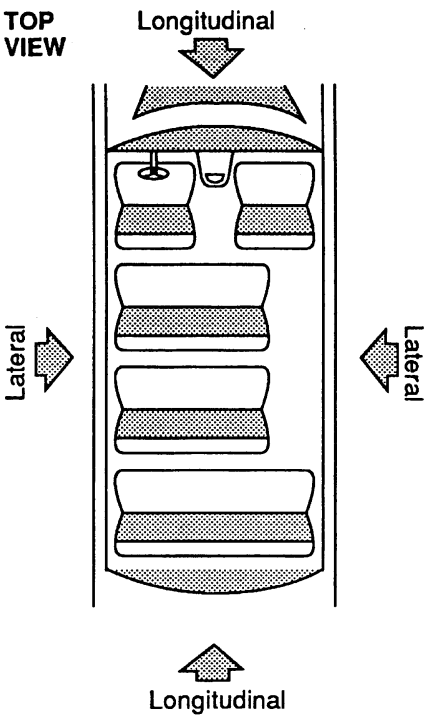

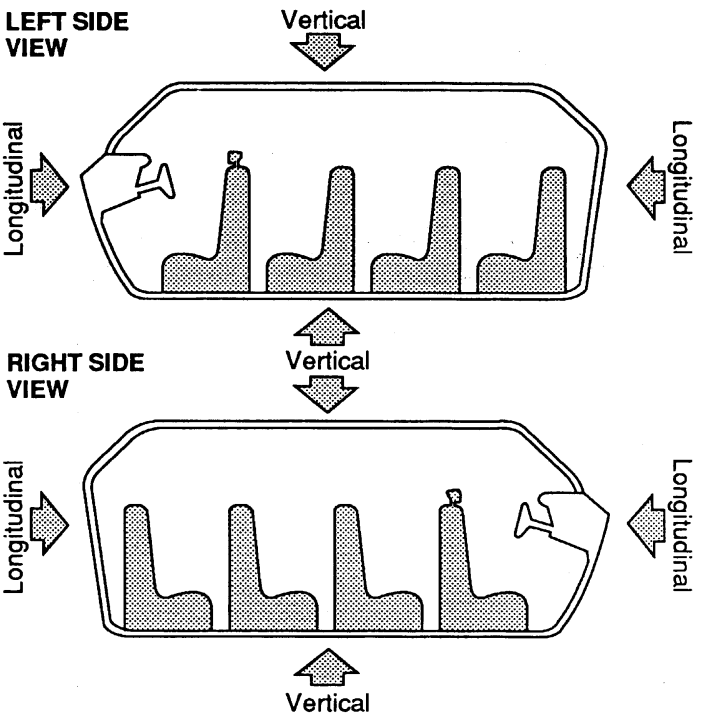

INTRUDED COMPONENT	LOCATION OF INTRUSION	DOMINANT CRUSH DIRECTION	COMPARISON VALUE	–	INTRUDED VALUE	=	INTRUSION
LF Seatback	21	Long.	23.1	–	17.6	=	5.5
RF Seatback	23	Long.	24	–	15.2	=	8.8
				–		=	
				–		=	
				–		=	
				–		=	
				–		=	
				–		=	
				–		=	
				–		=	
				–		=	
				–		=	
				–		=	
				–		=	
				–		=	

OCCUPANT AREA INTRUSION

Note: If no intrusions, leave variables IV 47-IV 86 blank.

	Location of Intrusion	Intruding Component	Magnitude of Intrusion	Dominant Crush Direction
1st	47. 23	48. 19	49. 3	50. 2
2nd	51. 21	52. 19	53. 2	54. 2
3rd	55.___	56.___	57.___	58.___
4th	59.___	60.___	61.___	62.___
5th	63.___	64.___	65.___	66.___
6th	67.___	68.___	69.___	70.___
7th	71.___	72.___	73.___	74.___
8th	75.___	76.___	77.___	78.___
9th	79.___	80.___	81.___	82.___
10th	83.___	84.___	85.___	86.___

LOCATION OF INTRUSION

Front Seat
- (11) Left
- (12) Middle
- (13) Right

Second Seat
- (21) Left
- (22) Middle
- (23) Right

Third Seat
- (31) Left
- (32) Middle
- (33) Right

Fourth Seat
- (41) Left
- (42) Middle
- (43) Right

(98) Other enclosed area (specify): _____

(99) Unknown

INTRUDING COMPONENT

Interior Components
- (01) Steering assembly
- (02) Instrument panel left
- (03) Instrument panel center
- (04) Instrument panel right
- (05) Toe pan
- (06) A-pillar
- (07) B-pillar
- (08) C-pillar
- (09) D-pillar
- (10) Door panel
- (11) Side panel/kickpanel
- (12) Roof (or convertible top)
- (13) Roof side rail
- (14) Windshield
- (15) Windshield header
- (16) Window frame
- (17) Floor pan
- (18) Backlight header
- (19) Front seat back
- (20) Second seat back
- (21) Third seat back
- (22) Fourth seat back
- (23) Fifth seat back
- (24) Seat cushion
- (25) Back panel or door surface
- (26) Other interior component (specify): _____

Exterior Components
- (30) Hood
- (31) Outside surface of vehicle (specify): _____
- (32) Other exterior object in the environment (specify): _____
- (33) Unknown exterior object
- (98) Intrusion of unlisted component(s) (specify): _____
- (99) Unknown

MAGNITUDE OF INTRUSION
- (1) ≥ 1 inch but < 3 inches
- (2) ≥ 3 inches but < 6 inches
- (3) ≥ 6 inches but < 12 inches
- (4) ≥ 12 inches but < 18 inches
- (5) ≥ 18 inches but < 24 inches
- (6) ≥ 24 inches
- (9) Unknown

DOMINANT CRUSH DIRECTION
- (1) Vertical
- (2) Longitudinal
- (3) Lateral
- (9) Unknown

STEERING COLUMN WORKING DIAGRAMS

STEERING COLUMN COLLAPSE

Steering Column Shear Module Movement

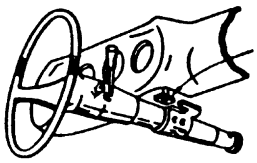

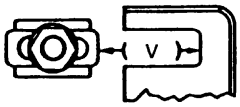

Left ____

Right ____ V = _____"

Direction and Magnitude of Steering Column Movement

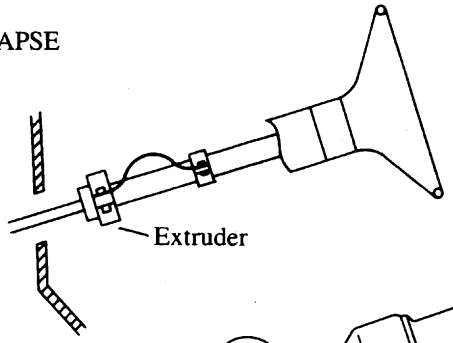

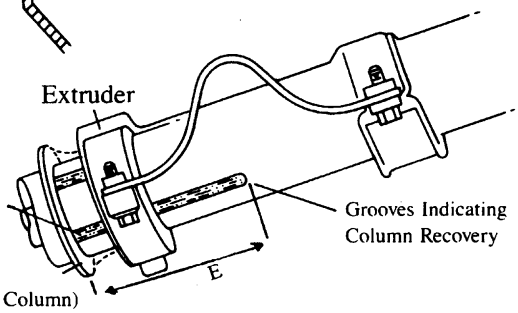

Extruder Retainer (Mini Column) or Flared Tube (Mod Column)

E=____

STEERING COLUMN MOVEMENT

Vertical Movement

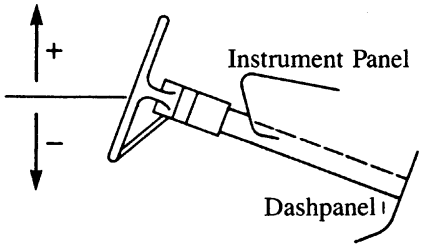

Lateral Movement

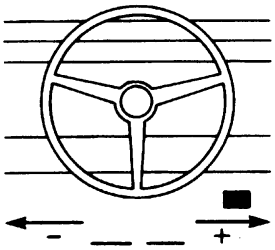

Longitudinal Movement

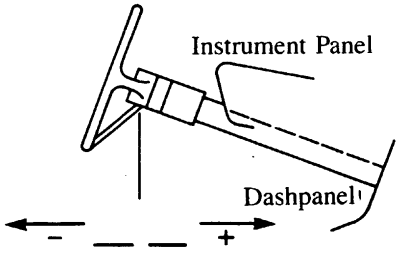

	COMPARISON VALUE	–	DAMAGED VALUE	=	MOVEMENT
VERTICAL		–		=	
LATERAL		–		=	
LONGITUDINAL		–		=	

STEERING RIM/SPOKE DEFORMATION

COMPARISON VALUE	–	DAMAGED VALUE	=	DEFORMATION
	–		=	
	–		=	

STEERING COLUMN

87. Steering Column Type 1

(1) Fixed column
(2) Tilt column
(3) Telescoping column
(4) Tilt and telescoping column
(8) Other column type (specify):

_____

(9) Unknown

88. Steering Column Collapse Due to Occupant Loading Ø Ø

_____ **Code actual measured movement to the nearest inch. See coding manual for measurement technique(s).**

(00) No movement, compression, or collapse
(01-49) Actual measured value
(50) 50 inches or greater

Estimated movement from observation
(81) Less than 1 inch
(82) ≥ 1 inch but < 2 inches
(83) ≥ 2 inches but < 4 inches
(84) ≥ 4 inches but < 6 inches
(85) ≥ 6 inches but < 8 inches
(86) Greater than or equal to 8 inches

(97) Apparent movement, value undetermined or cannot be measured or estimated
(98) Nonspecified type column
(99) Unknown

Direction And Magnitude of Steering Column Movement

89. Vertical Movement ± Ø Ø

90. Lateral Movement ± Ø Ø

91. Longitudinal Movement ± Ø Ø

Code the actual measured movement to the nearest inch. See Coding Manual for measurement technique(s)
(+00) No Steering column movement
(±01 – ±49) Actual measured value
(±50) 50 inches or greater

Estimated movement from observation
(±81) ≥ 1 inch but < 3 inches
(±82) ≥ 3 inches but < 6 inches
(±83) ≥ 6 inches but < 12 inches
(±84) ≥ 12 inches

(__97) Apparent movement > 1 inch but cannot be measured or estimated
(__99) Unknown

92. Steering Rim/Spoke Deformation Ø

_____ **Code actual measured deformation to the nearest inch.**

(0) No steering rim deformation
(1-5) Actual measured value
(6) 6 inches or more
(8) Observed deformation cannot be measured
(9) Unknown

93. Location of Steering Rim/Spoke Deformation Ø Ø

(00) No steering rim deformation

Quarter Sections
(01) Section A
(02) Section B
(03) Section C
(04) Section D

Half Sections
(05) Upper half of rim/spoke
(06) Lower half of rim/spoke
(07) Left half of rim/spoke
(08) Right half of rim/spoke

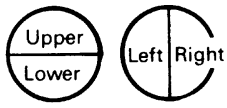

(09) Complete steering wheel collapse
(10) Undetermined location
(99) Unknown

INSTRUMENT PANEL

94. Odometer Reading 128,000

27,653 **miles—Code mileage to the nearest 1,000 miles**

(000) No odometer
(001) Less than 1,500 miles
(300) 299,500 miles or more
(999) Unknown

Source: Inspection

95. Instrument Panel Damage from Occupant Contact Ø

(0) No
(1) Yes
(9) Unknown

96. Knee Bolsters Deformed from Occupant Contact 8

(0) No
(1) Yes
(8) Not present
(9) Unknown

97. Did Glove Compartment Door Open During Collision(s) Ø

(0) No
(1) Yes
(8) Not present
(9) Unknown

VEHICLE INTERIOR SKETCHES

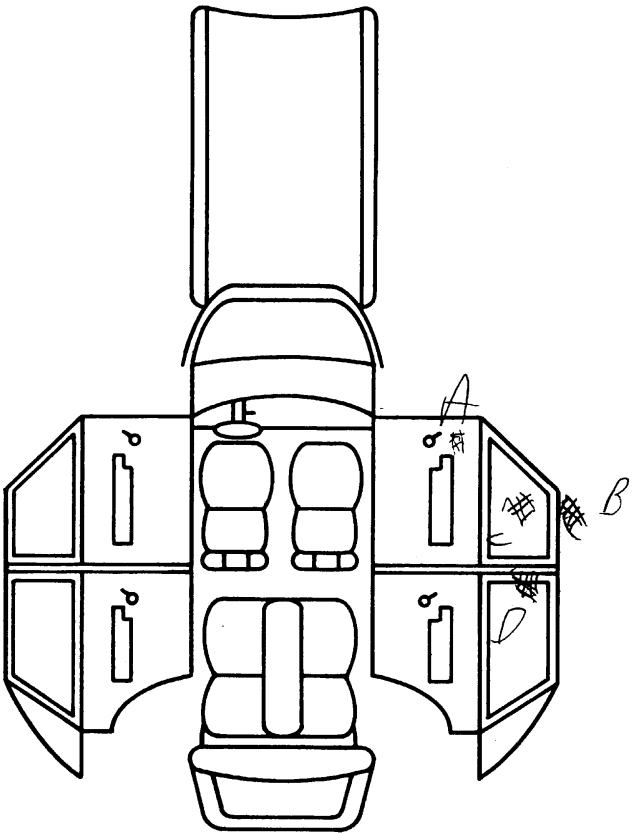

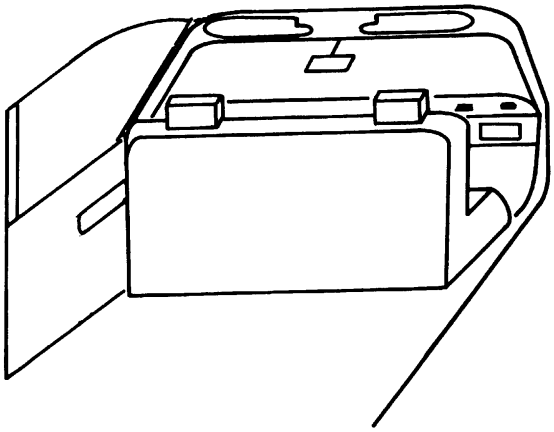

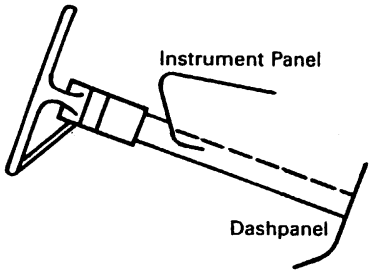

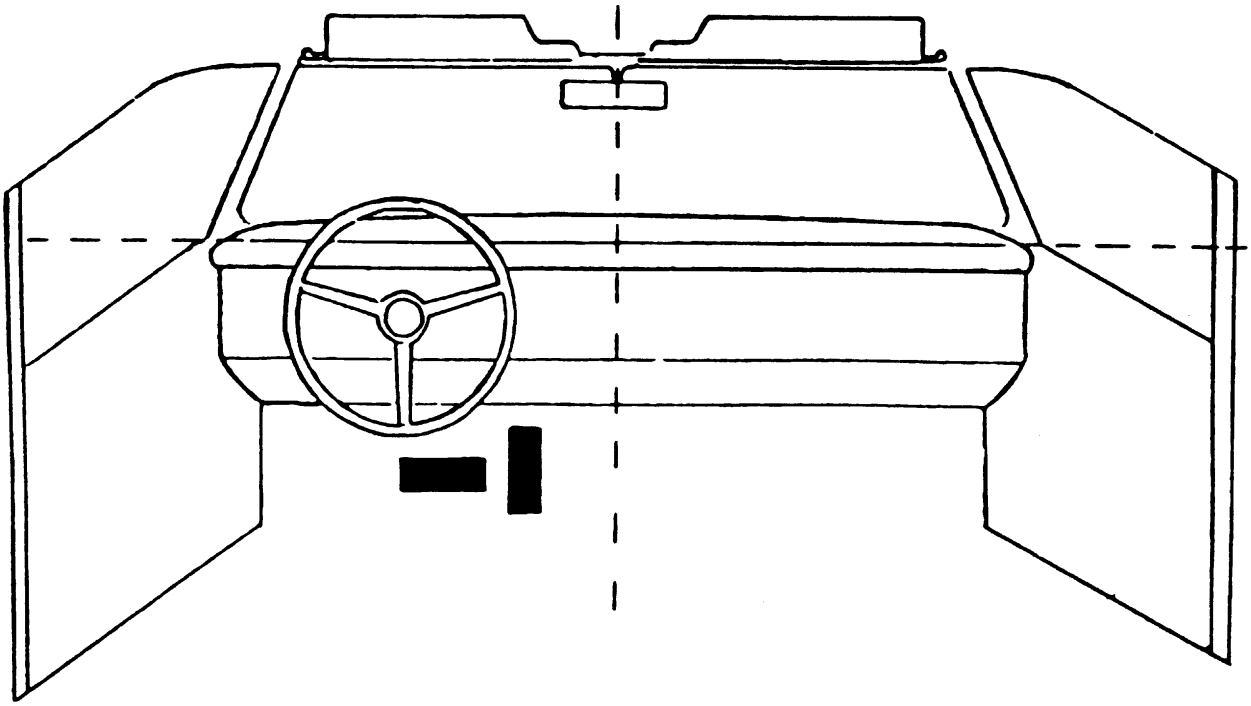

POINTS OF OCCUPANT CONTACT

Contact	Interior Component Contacted	Occupant No. If Known	Body Region If Known	Supporting Physical Evidence	Confidence Level of Contact Point
A	30	03	wrist	Abraded door panel	1
B	53	03	head	Abraded side rail	1
C	35	03	face	Smudge	1
D	36	03	head	Abraded frame/Smudged glass	1
E					
F					
G					
H					
I					
J					
K					
L					
M					
N					

CODES FOR INTERIOR COMPONENTS

FRONT
- (01) Windshield
- (02) Mirror
- (03) Sunvisor
- (04) Steering wheel rim
- (05) Steering wheel hub/spoke
- (06) Steering wheel (combination of codes 04 and 05)
- (07) Steering column, transmission selector lever, other attachment
- (08) Add on equipment (e.g., CB, tape deck, air conditioner)
- (09) Left instrument panel and below
- (10) Center instrument panel and below
- (11) Right instrument panel and below
- (12) Glove compartment door
- (13) Knee bolster
- (14) Windshield including one or more of the following: front header, A-pillar, instrument panel, mirror,or steering assembly (driver side only)
- (15) Windshield including one or more of the following: front header, A-pillar, instrument panel, or mirror (passenger side only)
- (16) Other front object (specify): _____

LEFT SIDE
- (20) Left side interior surface, excluding hardware or armrests
- (21) Left side hardware or armrest
- (22) Left A pillar
- (23) Left B pillar
- (24) Other left pillar (specify): _____
- (25) Left side window glass or frame
- (26) Left side window glass including one or more of the following: frame, window sill, A-pillar, B-pillar, or roof side rail
- (27) Other left side object (specify): _____

RIGHT SIDE
- (30) Right side interior surface, excluding hardware or armrests
- (31) Right side hardware or armrest
- (32) Right A pillar
- (33) Right B pillar
- (34) Other right pillar (specify): _____
- (35) Right side window glass or frame
- (36) Right side window glass including one or more of the following: frame, window sill, A-pillar, B-pillar, or roof side rail
- (37) Other right side object (specify): _____

INTERIOR
- (40) Seat, back support
- (41) Belt restraint webbing/buckle
- (42) Belt restraint B-pillar attachment point
- (43) Other restraint system component (specify): _____
- (44) Head restraint system
- (45) Air cushion
- (46) Other occupants (specify): _____
- (47) Interior loose objects
- (48) Child safety seat (specify): _____
- (49) Other interior object (specify): _____

ROOF
- (50) Front header
- (51) Rear header
- (52) Roof left side rail
- (53) Roof right side rail
- (54) Roof or convertible top

FLOOR
- (56) Floor including toe pan
- (57) Floor or console mounted transmission lever, including console
- (58) Parking brake handle
- (59) Foot controls including parking brake

REAR
- (60) Backlight (rear window)
- (61) Backlight storage rack, door, etc.
- (62) Other rear object (specify): _____

CONFIDENCE LEVEL OF CONTACT POINT
- (1) Certain
- (2) Probable
- (3) Possible
- (4) Unknown

AUTOMATIC RESTRAINTS

NOTES: Encode the data for each applicable front seat position. The attributes for the variables may be found below. Restraint systems should be assessed during the vehicle inspection then coded on the Occupant Assessment Form.

		Left	Center	Right
FIRST	Availability			
	Function			
	Failure			

Automatic (Passive) Restraint System Availability

(0) Not equipped/not available
(1) Airbag
(2) Airbag disconnected (specify):

_____

(3) Airbag not reinstalled
(4) 2 point automatic belts
(5) 3 point automatic belts
(6) Automatic belts destroyed or rendered inoperative
(9) Unknown

Automatic (Passive) Restraint Function

(0) Not equipped/not available

Automatic Belt
(1) Automatic belt in use
(2) Automatic belt not in use
(3) Automatic belt use unknown

Air Bag
(4) Airbag deployed during accident
(5) Airbag deployed inadvertently just prior to accident
(6) Deployed, accident sequence undetermined
(7) Nondeployed
(8) Unknown if deployed
(9) Unknown

Did Automatic (Passive) Restraint Fail

(0) Not equipped/not available
(1) No
(2) Yes (specify): _____
(9) Unknown

MANUAL RESTRAINTS

NOTES: Encode the applicable data **for each seat position** in the vehicle. The attributes for the variables may be found below. Restraint systems should be assessed during the vehicle inspection then coded on the Occupant Assessment Form.

If a child safety seat is present, encode the data on the back of this page.

If the vehicle has automatic restraints available, encode the appropriate data on the back of the previous page.

		Left	Center	Right
FIRST	Availability	8	3	8
	Use	00	00	00
	Failure Modes	0	0	0
SECOND	Availability	3	3	3
	Use	00	00	00
	Failure Modes	0	0	0
THIRD	Availability			
	Use			
	Failure Modes			
OTHER	Availability			
	Use			
	Failure Modes			

Manual (Active) Belt System Availability

(0) Not available
(1) Belt removed/destroyed
(2) Shoulder belt
(3) Lap belt
(4) Lap and shoulder belt
(5) Belt available — type unknown
(8) Other belt (specify):

separate lap and shoulder

(9) Unknown

Manual (Active) Belt System Use

(00) None used, not available, or belt removed/destroyed
(01) Inoperative (specify):

(02) Shoulder belt
(03) Lap belt
(04) Lap and shoulder belt
(05) Belt used — type unknown

(08) Other belt used (specify):

(12) Shoulder belt used with child safety seat
(13) Lap belt used with child safety seat
(14) Lap and shoulder belt used with child safety seat
(15) Belt used with child safety seat — type unknown
(18) Other belt used with child safety seat (specify):

(99) Unknown if belt used

Manual (Active) Belt Failure Modes During Accident

(0) No manual belt used or not available
(1) No manual belt failure(s)
(2) Manual belt failure(s) (encode all that apply above)
[A] Torn webbing (stretched webbing not included)
[B] Broken buckle or latchplate
[C] Upper anchorage separated
[D] Other achorage separated (specify):

[E] Broken retractor
[F] Other manual belt failure (specify):

(9) Unknown

CHILD SAFETY SEAT FIELD ASSESSMENT

When a child safety seat is present enter the occupant's number in the first row and complete the column below the occupant's number using the codes listed below. Complete a column for each child safety seat present.

Occupant Number						
1. Type of Child Safety Seat						
2. Child Safety Seat Orientation						
3. Child Safety Seat Harness Usage						
4. Child Safety Seat Shield Usage						
5. Child Safety Seat Tether Usage						
6. Child Safety Seat Make/Model	Specify Below for Each Child Safety Seat					

1. Type of Child Safety Seat

(0) No child safety seat
(1) Infant seat
(2) Toddler seat
(3) Convertible seat
(4) Booster seat
(7) Other type child safety seat (specify):

_____

(8) Unknown child safety seat type
(9) Unknown if child safety seat used

2. Child Safety Seat Orientation

(00) No child safety seat

Designed for Rear Facing for This Age/Weight
(01) Rear facing
(02) Forward facing
(03) Other orientation (specify):

_____

(04) Unknown orientation

Designed for Forward Facing for This Age/Weight
(11) Rear facing
(12) Forward facing
(18) Other orientation (specify):

_____

(19) Unknown orientation

Unknown Design or Orientation for This Age/Weight, or Unknown Age/Weight
(21) Rear facing
(22) Forward facing
(28) Other orientation (specify):

_____

(29) Unknown orientation

(99) Unknown if child safety seat used

3. Child Safety Seat Harness Usage

4. Child Safety Seat Shield Usage

5. Child Safety Seat Tether Usage

Note: Options Below Are Used for Variables 3-5.

(00) No child safety seat

Not Designed with Harness/Shield/Tether
(01) After market harness/shield/tether added, not used
(02) After market harness/shield/tether used
(03) Child safety seat used, but no after market harness/shield/tether added
(09) Unknown if harness/shield/tether added or used

Designed with Harness/Shield/Tether
(11) Harness/shield/tether not used
(12) Harness/shield/tether used
(19) Unknown if harness/shield/tether used

Unknown if Designed with Harness/Shield/Tether
(21) Harness/shield/tether not used
(22) Harness/shield/tether used
(29) Unknown if harness/shield/tether used

(99) Unknown if child safety seat used

6. Child Safety Seat Make/Model
(Specify make/model and occupant number)

_____

_____

_____

_____

HEAD RESTRAINTS/SEAT EVALUATION

NOTES: Encode the applicable data for **each seat position** in the vehicle. The attributes for these variables may be found at the bottom of the page. Head restraint type/damage and seat type/performance should be assessed during the vehicle inspection then coded on the Occupant Assessment Form.

		Left	Center	Right
FIRST	Head Restraint Type/Damage	Ø	Ø	Ø
	Seat Type	Ø7	Ø7	Ø7
	Seat Performance	2F	2F	2F
SECOND	Head Restraint Type/Damage	Ø	Ø	Ø
	Seat Type	ØØ	ØØ	ØØ
	Seat Performance	Ø	Ø	Ø
THIRD	Head Restraint Type/Damage			
	Seat Type			
	Seat Performance			
OTHER	Head Restraint Type/Damage			
	Seat Type			
	Seat Performance			

Head Restraint Type/Damage by Occupant at This Occupant Position

(0) No head restraints
(1) Integral — no damage
(2) Integral — damaged during accident
(3) Adjustable — no damage
(4) Adjustable — damaged during accident
(5) Add-on — no damage
(6) Add-on — damaged during accident
(8) Other (specify): _____
(9) Unknown

Seat Type (This Occupant Position)

(00) Occupant not seated or no seat
(01) Bucket
(02) Bucket with folding back
(03) Bench
(04) Bench with separate back cushions
(05) Bench with folding back(s)
(06) Split bench with separate back cushions
(07) Split bench with folding back(s)
(08) Pedestal (i.e., van type)
(09) Other seat type (specify): _____
(99) Unknown

Seat Performance (This Occupant Position)

(0) Occupant not seated or no seat
(1) No seat performance failure(s)
(2) Seat performance failure(s) (Encode all that apply)
[A] Seat adjusters failed
[B] Seat back folding locks failed
[C] Seat tracks failed
[D] Seat anchors failed
[E] Deformed by impact of passenger from rear
[F] Deformed by impact of passenger from front
[G] Deformed by own inertial forces
[H] Deformed by passenger compartment intrusion (specify):
_____
_____
_____
[I] Other (specify): _____
_____
(9) Unknown

DESCRIBE ANY INDICATION OF ABNORMAL OCCUPANT POSTURE (I.E. UNUSUAL OCCUPANT CONTACT PATTERN)

EJECTION/ENTRAPMENT DATA

Complete the following if the researcher has any indications that an occupant was either ejected from or entrapped in the vehicle. Code the appropriate data on the Occupant Assessment Form.

EJECTION No [✓] Yes [ ]

Describe indications of ejection and body parts involved in partial ejection(s):

Occupant Number						
Ejection						
Ejection Area						
Ejection Medium						
Medium Status						

Ejection
(1) Complete ejection
(2) Partial ejection
(3) Ejection, unknown degree
(9) Unknown

Ejection Area
(1) Windshield
(2) Left front
(3) Right front
(4) Left rear
(5) Right rear
(6) Rear
(7) Roof
(8) Other area (e.g., back of pickup, etc.) (specify): _____
(9) Unknown

Ejection Medium
(1) Door/hatch/tailgate
(2) Nonfixed roof structure
(3) Fixed glazing
(4) Nonfixed glazing (specify): _____
(5) Integral structure
(8) Other medium (specify): _____
(9) Unknown

Medium Status (Immediately Prior to Impact)
(1) Open
(2) Closed
(3) Integral structure
(9) Unknown

ENTRAPMENT No [✓] Yes [ ]

Describe entrapment mechanism: _____

Component(s): _____

(Note in vehicle interior diagram)

U.S. Department of Transportation
National Highway Traffic Safety Administration

EXTERIOR VEHICLE FORM

NATIONAL ACCIDENT SAMPLING SYSTEM
CRASHWORTHINESS DATA SYSTEM

1. Primary Sampling Unit Number: 51
2. Case Number–Stratum: 042C
3. Vehicle Number: 02

VEHICLE IDENTIFICATION

VIN: 1G8CS18B5E8[redacted] Model Year: 1984

Vehicle Make (specify): Chevrolet Vehicle Model (specify): Blazer

LOCATOR

Locate the end of the damage with respect to the vehicle longitudinal center line or bumper corner for end impacts or an undamaged axle for side impacts.

Specific Impact No.	Location of Direct Damage	Location of Field L
01	LR Bump Corner ahead 46"	LR bump corner ahead 83.1
02	Rollover 2 1/4 turns at impact, 1/4 post imp.	

CRUSH PROFILE

NOTES: Identify the plane at which the C-measurements are taken (e.g., at bumper, above bumper, at sill, above sill, etc.) and label adjustments (e.g., free space).

Measure and document on the vehicle diagram the location of maximum crush.

Measure C1 to C6 from driver to passenger side in front or rear impacts and rear to front in side impacts.

Free space value is defined as the distance between the baseline and the original body contour taken at the individual C locations. This may include the following: bumper lead, bumper taper, side protrusion, side taper, etc. Record the value for each C-measurement and maximum crush.

Use as many lines/columns as necessary to describe each damage profile.

Specific Impact Number	Plane of C-Measurements	Direct Damage Width (CDC)	Direct Damage Max Crush	Field L	C_1	Max C_2	C_3	C_4	C_5	C_6	±D
01	Max ext	79.0	C2	83.1	.3	8.8	3.0	7.0	2.4	0	-52.7
	freespace				1.5	1.1	0	1.1	.8	.4	
	Stand adj.				2	2	2	2	2	2	2
							4" ↑ above stick			9" ↑ above stick	
02	Rollover										

HS Form 435A
1/88

stands set to 175.3 OAL + (67.4) OAW due to damage

VEHICLE DAMAGE SKETCH

TIRE—WHEEL DAMAGE

a. Rotation physically restricted	b. Tire deflated
RF 2	RF 2
LF 2	LF 2
RR 2	RR 1
LR 2	LR 1

(1) Yes (2) No (8) NA (9) Unk.

TYPE OF TRANSMISSION

☐ Manual ☒ Automatic

ORIGINAL SPECIFICATIONS

Wheelbase	100.5
Overall Length	179.3
Maximum Width	65.4
Curb Weight	2897
Average Track	
Front Overhang	30.6
Rear Overhang	39.2
Engine Size: cyl./ displ.	V6
Undeformed End Width	60.8

WHEEL STEER ANGLES
(For locked front wheels or displaced rear axles only)

RF ± ___ ___ °
LF ± ___ ___ °
RR ± ___ ___ °
LR ± ___ ___ °

Within ±5 degrees

DRIVE WHEELS

☐ FWD ☒ RWD ☐ 4WD

Approximate Cargo Weight 50 lbs

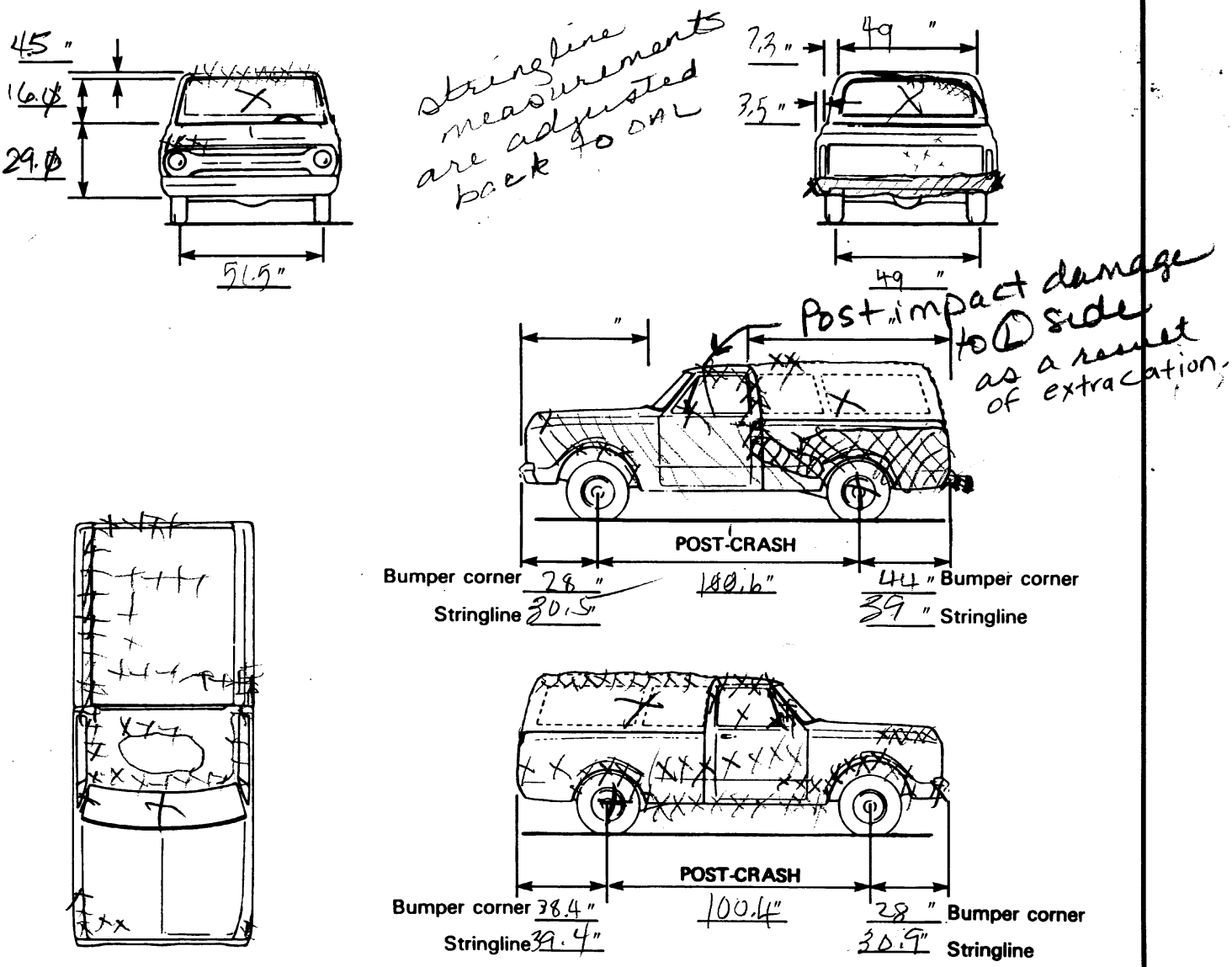

NOTES: Sketch new perimeter and cross hatch direct damage and single hatch induced damage on all views. Annotate observations which might be useful in reconstructing the accident (e.g., grass in tire bead, direction of striations, scuff on sidewall, etc.). If pulling trailer, sketch type of trailer and damage received on the back of this page.
Annotate any damage caused by extrication such as component removal by torching, prying, or hydraulic shears.

CDC WORKSHEET

CODES FOR OBJECT CONTACTED

01-30—Vehicle Number

Noncollision
- (31) Overturn—rollover
- (32) Fire or explosion
- (33) Jackknife
- (34) Other intraunit damage (specify): _____
- (35) Noncollision injury
- (38) Other noncollision (specify): _____
- (39) Noncollision—details unknown

Collision with Fixed Object
- (41) Tree (≤4 inches in diameter)
- (42) Tree (>4 inches in diameter)
- (43) Shrubbery or bush
- (44) Embankment
- (45) Breakaway pole or post (any diameter)

Nonbreakaway Pole or Post
- (50) Pole or post (≤4 inches in diameter)
- (51) Pole or post (>4 but ≤12 inches in diameter)
- (52) Pole or post (>12 inches in diameter)
- (53) Pole or post (diameter unknown)
- (54) Concrete traffic barrier
- (55) Impact attenuator
- (56) Other traffic barrier (specify): _____
- (57) Fence
- (58) Wall
- (59) Building
- (60) Ditch or Culvert
- (61) Ground
- (62) Fire hydrant
- (63) Curb
- (64) Bridge
- (68) Other fixed object (specify): _____
- (69) Unknown fixed object

Collision With Nonfixed Object
- (71) Motor vehicle not in transport
- (72) Pedestrian
- (73) Cyclist or cycle
- (74) Other nonmotorist or conveyance (specify): _____
- (75) Vehicle occupant
- (76) Animal
- (77) Train
- (78) Trailer, disconnected in transport
- (88) Other nonfixed object (specify): _____
- (89) Unknown nonfixed object
- (98) Other event (specify): _____
- (99) Unknown event or object

DEFORMATION CLASSIFICATION BY EVENT NUMBER

Accident Event Sequence Number	Object Contacted	(1) (2) Direction of Force (degrees)	Incremental Value of Shift	(3) Deformation Location	(4) Specific Longitudinal or Lateral Location	(5) Specific Vertical or Lateral Location	(6) Type of Damage Distribution	(7) Deformation Extent
01	01	330	00	L	Z	E	W	03
02	31	000	00	T	D	D	0	03

US Department of Transportation
National Highway Traffic Safety Administration

INTERIOR VEHICLE FORM

NATIONAL ACCIDENT SAMPLING SYSTEM
CRASHWORTHINESS DATA SYSTEM

1. Primary Sampling Unit Number 5 1
2. Case Number—Stratum 0 4 2 C
3. Vehicle Number 0 2

INTEGRITY

4. Passenger Compartment Integrity 9 8

(00) No integrity loss

Yes, Integrity Was Lost Through
(01) Windshield
(02) Door (side)
(03) Door/hatch (rear)
(04) Roof
(05) Roof glass
(06) Side window
(07) Rear window
(08) Roof and roof glass
(09) Windshield and door (side)
(10) Windshield and roof
(11) Side and rear window
(98) Other combination of above (specify): Windshield, Sideglass + Sunroof + backlight
(99) Unknown

Door, Tailgate Or Hatch Opening

5. LF 1 6. RF 3 7. LR 0 8. RR 0 9. TG/H 3

(0) No door/gate/hatch
(1) Door/gate/hatch remained closed and operational
(2) Door/gate/hatch came open during collision
(3) Door/gate/hatch jammed shut
(8) Other (specify): _____
(9) Unknown

Damage/Failure Associated with Door, Tailgate or Hatch Opening in Collision. If IV05-IV09 ≠ 2, Then Code 0.

10. LF 0 11. RF 0 12. LR 0 13. RR 0 14. TG/H 0

(0) No door/gate/hatch or door not opened

Door, Tailgate, or Hatch Came Open During Collision
(1) Door operational (no damage)
(2) Latch/striker failure due to damage
(3) Hinge failure due to damage
(4) Door structure failure due to damage
(5) Door support (i.e., pillar, sill, roof side rail, etc.) failure due to damage
(6) Latch/striker and hinge failure due to damage
(8) Other failure (specify): _____
(9) Unknown

GLAZING

Glazing Damage from Impact Forces

15. WS 3 16. LF 6 17. RF 6 18. LR 6 19. RR 6
20. BL 6 21. Roof 6 22. Other 8

(0) No glazing damage from impact forces
(2) Glazing in place and cracked from impact forces
(3) Glazing in place and holed from impact forces
(4) Glazing out-of-place (cracked or not) and not holed from impact forces
(5) Glazing out-of-place and holed from impact forces
(6) Glazing disintegrated from impact forces
(7) Glazing removed prior to accident
(8) No glazing
(9) Unknown if damaged

Glazing Damage from Occupant Contact

23. WS 0 24. LF 0 25. RF 0 26. LR 0 27. RR 0
28. BL 0 29. Roof 0 30. Other 0

(0) No occupant contact to glazing or no glazing
(1) Glazing contacted by occupant but no glazing damage
(2) Glazing in place and cracked by occupant contact
(3) Glazing in place and holed by occupant contact
(4) Glazing out-of-place (cracked or not) by occupant contact and not holed by occupant contact
(5) Glazing out-of-place by occupant contact and holed by occupant contact
(6) Glazing disintegrated by occupant contact
(9) Unknown if contacted by occupant

If No Glazing Damage ***And*** No Occupant Contact or No Glazing, Then Code IV 31 Through IV 46 As 0

Type of Window/Windshield Glazing

31. WS 1 32. LF 2 33. RF 2 34. LR 3 35. RR 3
36. BL 3 37. Roof 8 38. Other 0

(0) No glazing contact and no damage, or no glazing
(1) AS-1 — Laminated
(2) AS-2 — Tempered
(3) AS-3 — Tempered-tinted
(4) AS-14 — Glass/Plastic
(8) Other (specify): AS-2 w/ aftermarket tint
(9) Unknown

Window Precrash Glazing Status

39. WS 1 40. LF 2 41. RF 2 42. LR 1 43. RR 1
44. BL 2 45. Roof 2 46. Other 0

(0) No glazing contact and no damage, or no glazing
(1) Fixed
(2) Closed
(3) Partially opened
(4) Fully opened
(9) Unknown

INTRUSION WORK SHEET

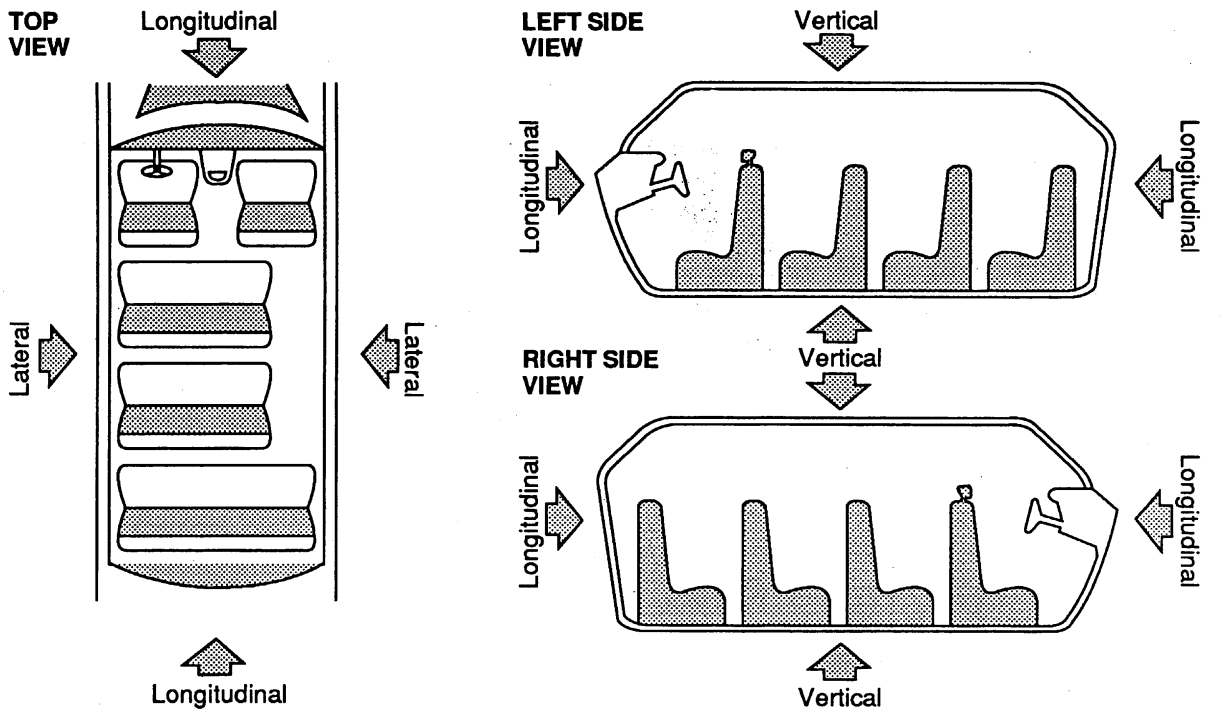

INTRUDED COMPONENT	LOCATION OF INTRUSION	DOMINANT CRUSH DIRECTION	COMPARISON VALUE	–	INTRUDED VALUE	=	INTRUSION
Side Panel	21	Lat.	28	–	25.2	=	2.8
(R) Roof side rail	23	Vert.	23	–	17.1	=	5.9
windshield	13	Vert	28	–	5.8	=	22.2
WS header	13	Vert	28.5	–	27.5	=	1.0
WS header	11	Vert	28.5	–	27	=	1.5
WS	11	Vert	28	–	16	=	12.0
A Pillar	11	Vert	40	–	38.5	=	1.5
				–		=	
				–		=	
				–		=	
				–		=	
				–		=	
				–		=	
				–		=	
				–		=	

OCCUPANT AREA INTRUSION

Note: If no intrusions, leave variables IV 47-IV 86 blank.

	Location of Intrusion	Intruding Component	Magnitude of Intrusion	Dominant Crush Direction
1st	47. 13	48. 14	49. 5	50. 1
2nd	51. 11	52. 14	53. 4	54. 1
3rd	55. 23	56. 13	57. 2	58. 1
4th	59. 21	60. 11	61. 1	62. 3
5th	63. 11	64. 96	65. 1	66. 1
6th	67. 11	68. 15	69. 1	70. 1
7th	71. 13	72. 15	73. 1	74. 1
8th	75.	76.	77.	78.
9th	79.	80.	81.	82.
10th	83.	84.	85.	86.

LOCATION OF INTRUSION

Front Seat
- (11) Left
- (12) Middle
- (13) Right

Second Seat
- (21) Left
- (22) Middle
- (23) Right

Third Seat
- (31) Left
- (32) Middle
- (33) Right

Fourth Seat
- (41) Left
- (42) Middle
- (43) Right

(98) Other enclosed area (specify): _____

(99) Unknown

INTRUDING COMPONENT

Interior Components
- (01) Steering assembly
- (02) Instrument panel left
- (03) Instrument panel center
- (04) Instrument panel right
- (05) Toe pan
- (06) A-pillar
- (07) B-pillar
- (08) C-pillar
- (09) D-pillar
- (10) Door panel
- (11) Side panel/kickpanel
- (12) Roof (or convertible top)
- (13) Roof side rail
- (14) Windshield
- (15) Windshield header
- (16) Window frame
- (17) Floor pan
- (18) Backlight header
- (19) Front seat back
- (20) Second seat back
- (21) Third seat back
- (22) Fourth seat back
- (23) Fifth seat back
- (24) Seat cushion
- (25) Back panel or door surface
- (26) Other interior component (specify): _____

Exterior Components
- (30) Hood
- (31) Outside surface of vehicle (specify): _____
- (32) Other exterior object in the environment (specify): _____
- (33) Unknown exterior object
- (98) Intrusion of unlisted component(s) (specify): _____
- (99) Unknown

MAGNITUDE OF INTRUSION
- (1) ≥ 1 inch but < 3 inches
- (2) ≥ 3 inches but < 6 inches
- (3) ≥ 6 inches but < 12 inches
- (4) ≥ 12 inches but < 18 inches
- (5) ≥ 18 inches but < 24 inches
- (6) ≥ 24 inches
- (9) Unknown

DOMINANT CRUSH DIRECTION
- (1) Vertical
- (2) Longitudinal
- (3) Lateral
- (9) Unknown

STEERING COLUMN WORKING DIAGRAMS

STEERING COLUMN COLLAPSE

Steering Column Shear Module Movement

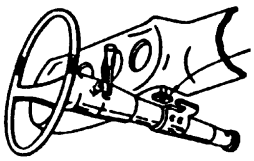

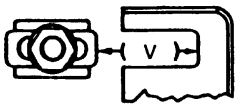

Left ____

Right ____ V = _____"

Direction and Magnitude of Steering Column Movement

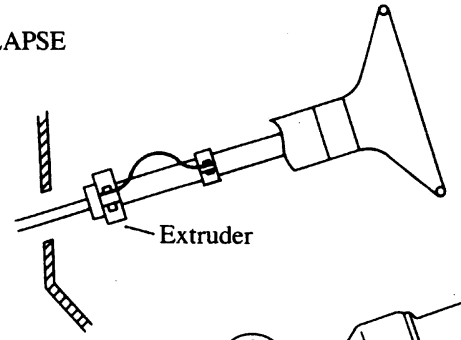

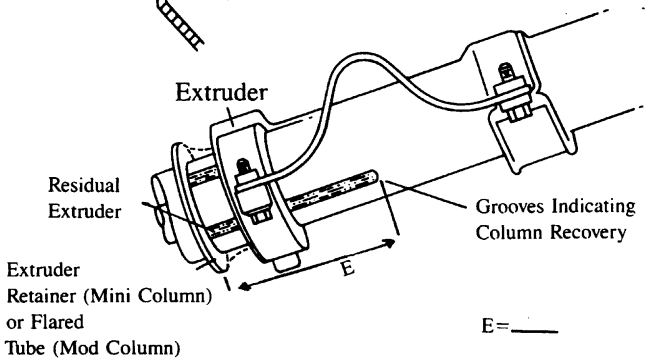

STEERING COLUMN MOVEMENT

Vertical Movement

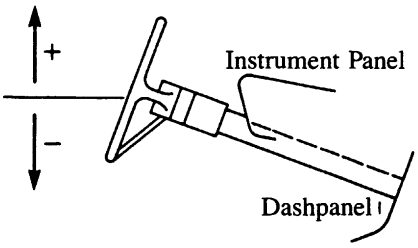

Lateral Movement

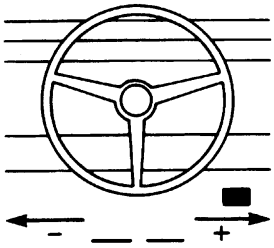

Longitudinal Movement

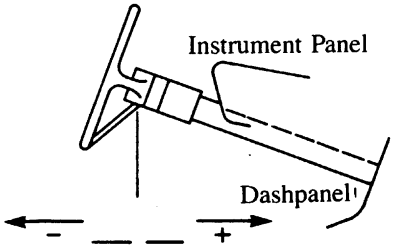

	COMPARISON VALUE	–	DAMAGED VALUE	=	MOVEMENT
VERTICAL		–		=	
LATERAL		–		=	
LONGITUDINAL		–		=	

STEERING RIM/SPOKE DEFORMATION

COMPARISON VALUE	–	DAMAGED VALUE	=	DEFORMATION
	–		=	
	–		=	

STEERING COLUMN

87. Steering Column Type 2
(1) Fixed column
(2) Tilt column
(3) Telescoping column
(4) Tilt and telescoping column
(8) Other column type (specify):

_____

(9) Unknown

88. Steering Column Collapse Due to Occupant Loading 0 0

_____ **Code actual measured movement to the nearest inch. See coding manual for measurement technique(s).**
(00) No movement, compression, or collapse
(01-49) Actual measured value
(50) 50 inches or greater

Estimated movement from observation
(81) Less than 1 inch
(82) ≥ 1 inch but < 2 inches
(83) ≥ 2 inches but < 4 inches
(84) ≥ 4 inches but < 6 inches
(85) ≥ 6 inches but < 8 inches
(86) Greater than or equal to 8 inches

(97) Apparent movement, value undetermined or cannot be measured or estimated
(98) Nonspecified type column
(99) Unknown

Direction And Magnitude of Steering Column Movement

89. Vertical Movement + 0 0

90. Lateral Movement + 0 0

91. Longitudinal Movement + 0 0

Code the actual measured movement to the nearest inch. See Coding Manual for measurement technique(s)
(+00) No Steering column movement
(±01 – ±49) Actual measured value
(±50) 50 inches or greater

Estimated movement from observation
(±81) ≥ 1 inch but < 3 inches
(±82) ≥ 3 inches but < 6 inches
(±83) ≥ 6 inches but < 12 inches
(±84) ≥ 12 inches

(__97) Apparent movement > 1 inch but cannot be measured or estimated
(__99) Unknown

92. Steering Rim/Spoke Deformation 0

_____ **Code actual measured deformation to the nearest inch.**
(0) No steering rim deformation
(1-5) Actual measured value
(6) 6 inches or more
(8) Observed deformation cannot be measured
(9) Unknown

93. Location of Steering Rim/Spoke Deformation 0 0

(00) No steering rim deformation

Quarter Sections
(01) Section A
(02) Section B
(03) Section C
(04) Section D

Half Sections
(05) Upper half of rim/spoke
(06) Lower half of rim/spoke
(07) Left half of rim/spoke
(08) Right half of rim/spoke

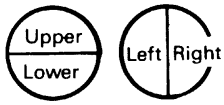

(09) Complete steering wheel collapse
(10) Undetermined location
(99) Unknown

INSTRUMENT PANEL

94. Odometer Reading 0 77,000
76863 **miles—Code mileage to the nearest 1,000 miles**
(000) No odometer
(001) Less than 1,500 miles
(300) 299,500 miles or more
(999) Unknown
Source: Inspection

95. Instrument Panel Damage from Occupant Contact 0
(0) No
(1) Yes
(9) Unknown

96. Knee Bolsters Deformed from Occupant Contact 8
(0) No
(1) Yes
(8) Not present
(9) Unknown

97. Did Glove Compartment Door Open During Collision(s) 2
(0) No
(1) Yes
(8) Not present
(9) Unknown

VEHICLE INTERIOR SKETCHES

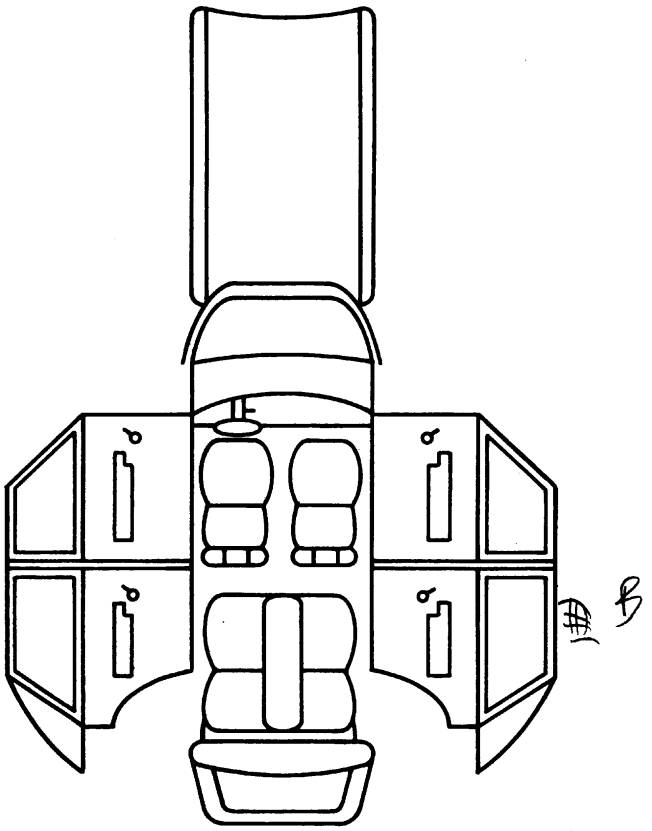

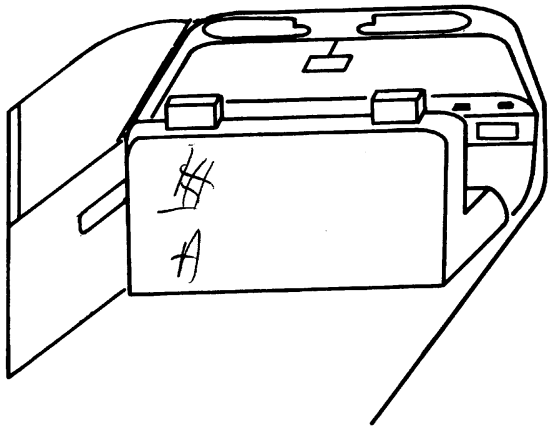

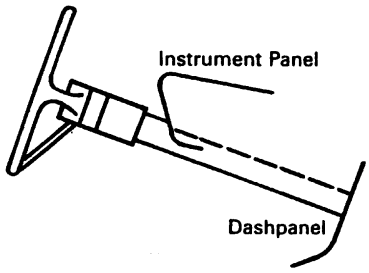

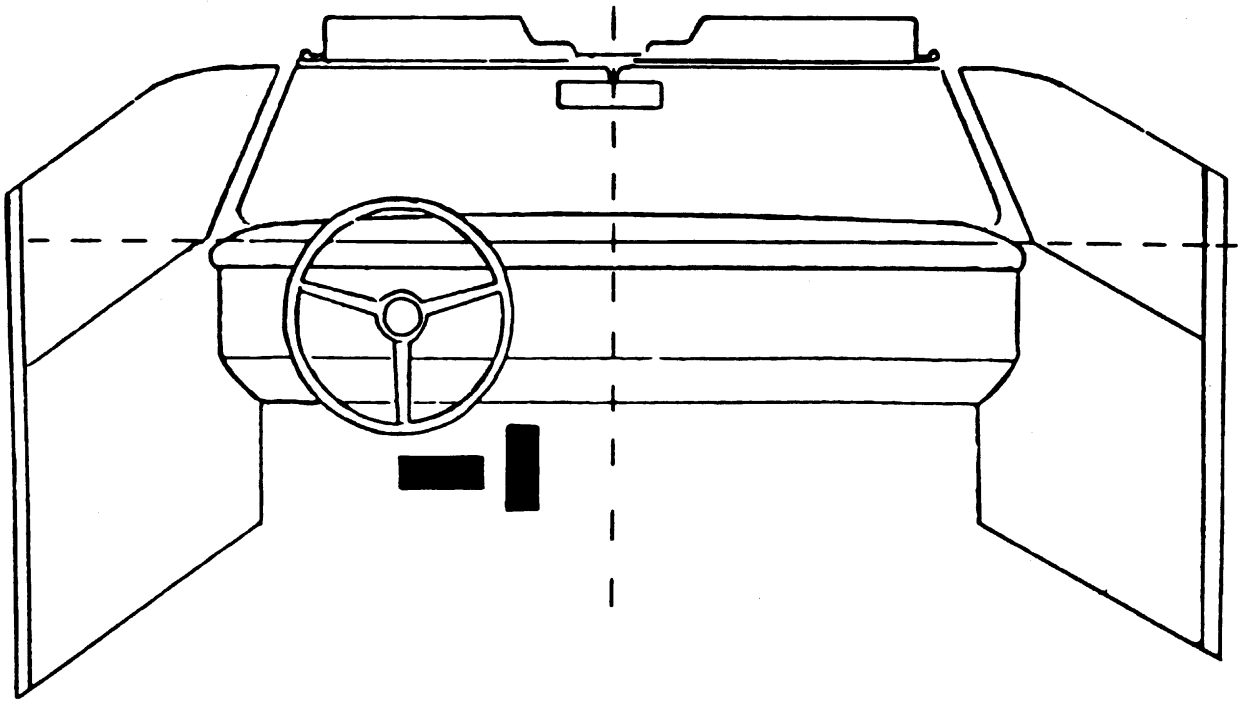

POINTS OF OCCUPANT CONTACT

Contact	Interior Component Contacted	Occupant No. If Known	Body Region If Known	Supporting Physical Evidence	Confidence Level of Contact Point
A	40	03	Face	Blood / liquid	1
B	53	03	head	Abraded fabric	1
C					
D					
E					
F					
G					
H					
I					
J					
K					
L					
M					
N					

CODES FOR INTERIOR COMPONENTS

FRONT
- (01) Windshield
- (02) Mirror
- (03) Sunvisor
- (04) Steering wheel rim
- (05) Steering wheel hub/spoke
- (06) Steering wheel (combination of codes 04 and 05)
- (07) Steering column, transmission selector lever, other attachment
- (08) Add on equipment (e.g., CB, tape deck, air conditioner)
- (09) Left instrument panel and below
- (10) Center instrument panel and below
- (11) Right instrument panel and below
- (12) Glove compartment door
- (13) Knee bolster
- (14) Windshield including one or more of the following: front header, A-pillar, instrument panel, mirror,or steering assembly (driver side only)
- (15) Windshield including one or more of the following: front header, A-pillar, instrument panel, or mirror (passenger side only)
- (16) Other front object (specify): _____

LEFT SIDE
- (20) Left side interior surface, excluding hardware or armrests
- (21) Left side hardware or armrest
- (22) Left A pillar
- (23) Left B pillar
- (24) Other left pillar (specify): _____
- (25) Left side window glass or frame
- (26) Left side window glass including one or more of the following: frame, window sill, A-pillar, B-pillar, or roof side rail
- (27) Other left side object (specify): _____

RIGHT SIDE
- (30) Right side interior surface, excluding hardware or armrests
- (31) Right side hardware or armrest
- (32) Right A pillar
- (33) Right B pillar
- (34) Other right pillar (specify): _____
- (35) Right side window glass or frame
- (36) Right side window glass including one or more of the following: frame, window sill, A-pillar, B-pillar, or roof side rail
- (37) Other right side object (specify): _____

INTERIOR
- (40) Seat, back support
- (41) Belt restraint webbing/buckle
- (42) Belt restraint B-pillar attachment point
- (43) Other restraint system component (specify): _____
- (44) Head restraint system
- (45) Air cushion
- (46) Other occupants (specify): _____
- (47) Interior loose objects
- (48) Child safety seat (specify): _____
- (49) Other interior object (specify): _____

ROOF
- (50) Front header
- (51) Rear header
- (52) Roof left side rail
- (53) Roof right side rail
- (54) Roof or convertible top

FLOOR
- (56) Floor including toe pan
- (57) Floor or console mounted transmission lever, including console
- (58) Parking brake handle
- (59) Foot controls including parking brake

REAR
- (60) Backlight (rear window)
- (61) Backlight storage rack, door, etc.
- (62) Other rear object (specify): _____

CONFIDENCE LEVEL OF CONTACT POINT
- (1) Certain
- (2) Probable
- (3) Possible
- (4) Unknown

AUTOMATIC RESTRAINTS

NOTES: Encode the data for each applicable front seat position. The attributes for the variables may be found below. Restraint systems should be assessed during the vehicle inspection then coded on the Occupant Assessment Form.

		Left	Center	Right
FIRST	Availability			
	Function			
	Failure			

Automatic (Passive) Restraint System Availability

(0) Not equipped/not available
(1) Airbag
(2) Airbag disconnected (specify):

_____

(3) Airbag not reinstalled
(4) 2 point automatic belts
(5) 3 point automatic belts
(6) Automatic belts destroyed or rendered inoperative
(9) Unknown

Automatic (Passive) Restraint Function

(0) Not equipped/not available

Automatic Belt
(1) Automatic belt in use
(2) Automatic belt not in use
(3) Automatic belt use unknown

Air Bag
(4) Airbag deployed during accident
(5) Airbag deployed inadvertently just prior to accident
(6) Deployed, accident sequence undetermined
(7) Nondeployed
(8) Unknown if deployed
(9) Unknown

Did Automatic (Passive) Restraint Fail

(0) Not equipped/not available
(1) No
(2) Yes (specify): _____
(9) Unknown

MANUAL RESTRAINTS

NOTES: Encode the applicable data **for each seat position** in the vehicle. The attributes for the variables may be found below. Restraint systems should be assessed during the vehicle inspection then coded on the Occupant Assessment Form.

If a child safety seat is present, encode the data on the back of this page.

If the vehicle has automatic restraints available, encode the appropriate data on the back of the previous page.

		Left	Center	Right
FIRST	Availability	4	Ø	4
	Use	Ø4	Ø	Ø4
	Failure Modes	1	Ø	1
SECOND	Availability	3	Ø	3
	Use	ØØ	ØØ	Ø3
	Failure Modes	Ø	Ø	1
THIRD	Availability			
	Use			
	Failure Modes			
OTHER	Availability			
	Use			
	Failure Modes			

Manual (Active) Belt System Availability

(0) Not available
(1) Belt removed/destroyed
(2) Shoulder belt
(3) Lap belt
(4) Lap and shoulder belt
(5) Belt available — type unknown
(8) Other belt (specify):

_____

(9) Unknown

Manual (Active) Belt System Use

(00) None used, not available, or belt removed/destroyed
(01) Inoperative (specify):

_____

(02) Shoulder belt
(03) Lap belt
(04) Lap and shoulder belt
(05) Belt used — type unknown

_____

(08) Other belt used (specify):

_____

(12) Shoulder belt used with child safety seat
(13) Lap belt used with child safety seat
(14) Lap and shoulder belt used with child safety seat
(15) Belt used with child safety seat — type unknown
(18) Other belt used with child safety seat (specify):

_____

(99) Unknown if belt used

Manual (Active) Belt Failure Modes During Accident

(0) No manual belt used or not available
(1) No manual belt failure(s)
(2) Manual belt failure(s) (encode all that apply above)
[A] Torn webbing (stretched webbing not included)
[B] Broken buckle or latchplate
[C] Upper anchorage separated
[D] Other achorage separated (specify):

_____

[E] Broken retractor
[F] Other manual belt failure (specify):

_____

(9) Unknown

CHILD SAFETY SEAT FIELD ASSESSMENT

When a child safety seat is present enter the occupant's number in the first row and complete the column below the occupant's number using the codes listed below. Complete a column for each child safety seat present.

Occupant Number						
1. Type of Child Safety Seat						
2. Child Safety Seat Orientation						
3. Child Safety Seat Harness Usage						
4. Child Safety Seat Shield Usage						
5. Child Safety Seat Tether Usage						
6. Child Safety Seat Make/Model	Specify Below for Each Child Safety Seat					

1. Type of Child Safety Seat

(0) No child safety seat
(1) Infant seat
(2) Toddler seat
(3) Convertible seat
(4) Booster seat
(7) Other type child safety seat (specify):

_____

(8) Unknown child safety seat type
(9) Unknown if child safety seat used

2. Child Safety Seat Orientation

(00) No child safety seat

Designed for Rear Facing for This Age/Weight
(01) Rear facing
(02) Forward facing
(03) Other orientation (specify):

_____

(04) Unknown orientation

Designed for Forward Facing for This Age/Weight
(11) Rear facing
(12) Forward facing
(18) Other orientation (specify):

_____

(19) Unknown orientation

Unknown Design or Orientation for This Age/Weight, or Unknown Age/Weight
(21) Rear facing
(22) Forward facing
(28) Other orientation (specify):

_____

(29) Unknown orientation

(99) Unknown if child safety seat used

3. Child Safety Seat Harness Usage

4. Child Safety Seat Shield Usage

5. Child Safety Seat Tether Usage

Note: Options Below Are Used for Variables 3-5.

(00) No child safety seat

Not Designed with Harness/Shield/Tether
(01) After market harness/shield/tether added, not used
(02) After market harness/shield/tether used
(03) Child safety seat used, but no after market harness/shield/tether added
(09) Unknown if harness/shield/tether added or used

Designed with Harness/Shield/Tether
(11) Harness/shield/tether not used
(12) Harness/shield/tether used
(19) Unknown if harness/shield/tether used

Unknown if Designed with Harness/Shield/Tether
(21) Harness/shield/tether not used
(22) Harness/shield/tether used
(29) Unknown if harness/shield/tether used

(99) Unknown if child safety seat used

6. Child Safety Seat Make/Model
(Specify make/model and occupant number)

_____

_____

_____

_____

HEAD RESTRAINTS/SEAT EVALUATION

NOTES: Encode the applicable data for **each seat position** in the vehicle. The attributes for these variables may be found at the bottom of the page. Head restraint type/damage and seat type/performance should be assessed during the vehicle inspection then coded on the Occupant Assessment Form.

		Left	Center	Right
FIRST	Head Restraint Type/Damage	1	Ø	1
	Seat Type	Ø2	ØØ	Ø2
	Seat Performance	1	Ø	1
SECOND	Head Restraint Type/Damage	Ø	Ø	Ø
	Seat Type	ØØ	ØØ	Ø5
	Seat Performance	Ø	Ø	1
THIRD	Head Restraint Type/Damage			
	Seat Type			
	Seat Performance			
OTHER	Head Restraint Type/Damage			
	Seat Type			
	Seat Performance			

Head Restraint Type/Damage by Occupant at This Occupant Position

(0) No head restraints
(1) Integral — no damage
(2) Integral — damaged during accident
(3) Adjustable — no damage
(4) Adjustable — damaged during accident
(5) Add-on — no damage
(6) Add-on — damaged during accident
(8) Other (specify): _____
(9) Unknown

Seat Type (This Occupant Position)

(00) Occupant not seated or no seat
(01) Bucket
(02) Bucket with folding back
(03) Bench
(04) Bench with separate back cushions
(05) Bench with folding back(s)
(06) Split bench with separate back cushions
(07) Split bench with folding back(s)
(08) Pedestal (i.e., van type)
(09) Other seat type (specify): _____
(99) Unknown

Seat Performance (This Occupant Position)

(0) Occupant not seated or no seat
(1) No seat performance failure(s)
(2) Seat performance failure(s) (Encode all that apply)
[A] Seat adjusters failed
[B] Seat back folding locks failed
[C] Seat tracks failed
[D] Seat anchors failed
[E] Deformed by impact of passenger from rear
[F] Deformed by impact of passenger from front
[G] Deformed by own inertial forces
[H] Deformed by passenger compartment intrusion (specify):
_____
_____
_____
[I] Other (specify): _____
_____
(9) Unknown

DESCRIBE ANY INDICATION OF ABNORMAL OCCUPANT POSTURE (I.E. UNUSUAL OCCUPANT CONTACT PATTERN)

EJECTION/ENTRAPMENT DATA

Complete the following if the researcher has any indications that an occupant was either ejected from or entrapped in the vehicle. Code the appropriate data on the Occupant Assessment Form.

EJECTION No [✓] Yes [ ]

Describe indications of ejection and body parts involved in partial ejection(s):

Occupant Number						
Ejection						
Ejection Area						
Ejection Medium						
Medium Status						

Ejection
(1) Complete ejection
(2) Partial ejection
(3) Ejection, unknown degree
(9) Unknown

Ejection Area
(1) Windshield
(2) Left front
(3) Right front
(4) Left rear
(5) Right rear
(6) Rear
(7) Roof
(8) Other area (e.g., back of pickup, etc.) (specify): _____
(9) Unknown

Ejection Medium
(1) Door/hatch/tailgate
(2) Nonfixed roof structure
(3) Fixed glazing
(4) Nonfixed glazing (specify): _____
(5) Integral structure
(8) Other medium (specify): _____
(9) Unknown

Medium Status (Immediately Prior to Impact)
(1) Open
(2) Closed
(3) Integral structure
(9) Unknown

ENTRAPMENT No [✓] Yes [ ]

Describe entrapment mechanism: _____

Component(s): _____

(Note in vehicle interior diagram)

U.S. Department of Transportation
National Highway Traffic Safety Administration

Form Approved
O.M.B. No. 2127-0021
NATIONAL ACCIDENT SAMPLING SYSTEM
CRASHWORTHINESS DATA SYSTEM

OCCUPANT INJURY FORM

1. Primary Sampling Unit Number 51
2. Case Number–Stratum Ø42C
3. Vehicle Number Ø2
4. Occupant Number Ø1

INJURY DATA

Record below the actual injuries sustained by this occupant that were identified from the official and unofficial data sources. Remember not to double count an injury just because it was identified from two different sources. If greater than twenty injuries have been documented, encode the balance on the Occupant Injury Supplement.

	Source of Injury Data	O.I.C.–A.I.S. Body Region	Aspect	Lesion	System Organ	A.I.S. Severity	Injury Source	Injury Source Confidence Level	Direct/ Indirect Injury	Occupant Area Intrusion No.
1st	5. 3	6. S	7. L	8. C	9. I	10. 1	11. 41	12. 1	13. 1	14. ØØ
2nd	15. 3	16. W	17. R	18. A	19. I	20. 1	21. 91	22. 9	23. 7	24. 99
3rd	25. 3	26. W	27. L	28. A	29. I	30. 1	31. 91	32. 9	33. 7	34. 99
4th	35. 3	36. M	37. R	38. C	39. I	40. 1	41. 41	42. 1	43. 1	44. ØØ
5th	45.	46.	47.	48.	49.	50.	51.	52.	53.	54.
6th	55.	56.	57.	58.	59.	60.	61.	62.	63.	64.
7th	65.	66.	67.	68.	69.	70.	71.	72.	73.	74.
8th	75.	76.	77.	78.	79.	80.	81.	82.	83.	84.
9th	85.	86.	87.	88.	89.	90.	91.	92.	93.	94.
10th	95.	96.	97.	98.	99.	100.	101.	102.	103.	104.
11th	105.	106.	107.	108.	109.	110.	111.	112.	113.	114.
12th	115.	116.	117.	118.	119.	120.	121.	122.	123.	124.
13th	125.	126.	127.	128.	129.	130.	131.	132.	133.	134.
14th	135.	136.	137.	138.	139.	140.	141.	142.	143.	144.
15th	145.	146.	147.	148.	149.	150.	151.	152.	153.	154.
16th	155.	156.	157.	158.	159.	160.	161.	162.	163.	164.
17th	165.	166.	167.	168.	169.	170.	171.	172.	173.	174.
18th	175.	176.	177.	178.	179.	180.	181.	182.	183.	184.
19th	185.	186.	187.	188.	189.	190.	191.	192.	193.	194.
20th	195.	196.	197.	198.	199.	200.	201.	202.	203.	204.

HS Form 433B
1/88

This report is authorized by P.L. 89-563, Title 1, Section 106, 108, and 112. While you are not required to respond, your cooperation is needed to make the results of this data collection effort comprehensive, accurate, and timely.

OCCUPANT INJURY DATA SUPPLEMENT

	Source of Injury Data	O.I.C. – A.I.S.					Injury Source	Injury Source Confidence Level	Direct/ Indirect Injury	Occupant Area Intrusion No.
		Body Region	Aspect	Lesion	System Organ	A.I.S. Severity				
21st	—	—	—	—	—	—	— —	—	—	— —
22nd	—	—	—	—	—	—	— —	—	—	— —
23rd	—	—	—	—	—	—	— —	—	—	— —
24th	—	—	—	—	—	—	— —	—	—	— —
25th	—	—	—	—	—	—	— —	—	—	— —
26th	—	—	—	—	—	—	— —	—	—	— —
27th	—	—	—	—	—	—	— —	—	—	— —
28th	—	—	—	—	—	—	— —	—	—	— —
29th	—	—	—	—	—	—	— —	—	—	— —
30th	—	—	—	—	—	—	— —	—	—	— —
31st	—	—	—	—	—	—	— —	—	—	— —
32nd	—	—	—	—	—	—	— —	—	—	— —
33rd	—	—	—	—	—	—	— —	—	—	— —
34th	—	—	—	—	—	—	— —	—	—	— —
35th	—	—	—	—	—	—	— —	—	—	— —
36th	—	—	—	—	—	—	— —	—	—	— —
37th	—	—	—	—	—	—	— —	—	—	— —
38th	—	—	—	—	—	—	— —	—	—	— —
39th	—	—	—	—	—	—	— —	—	—	— —
40th	—	—	—	—	—	—	— —	—	—	— —
41st	—	—	—	—	—	—	— —	—	—	— —
42nd	—	—	—	—	—	—	— —	—	—	— —
43rd	—	—	—	—	—	—	— —	—	—	— —
44th	—	—	—	—	—	—	— —	—	—	— —
45th	—	—	—	—	—	—	— —	—	—	— —

OFFICIAL INJURY DATA—SOFT TISSUE INJURIES

Indicate the *Location, Lesion, Detail* (size, depth, fracture type, head injury clinical signs and neurological deficits), and *Source* of all injuries indicated by official sources (or from PAR or other unofficial sources if medical records and interviewee data are unavailable.)

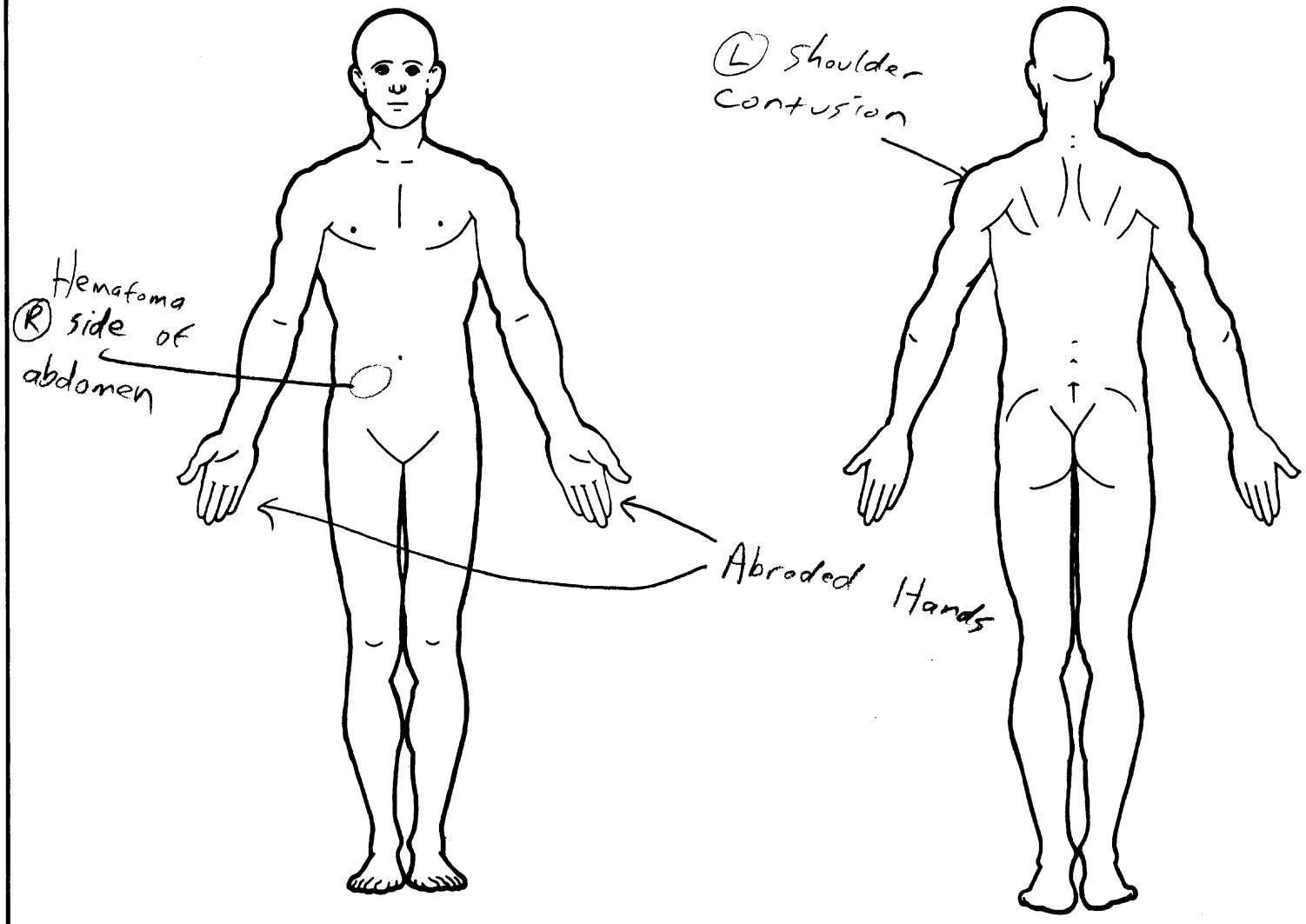

SOURCE OF INJURY DATA

OFFICIAL

(1) Autopsy records with or without hospital medical records
(2) Hospital medical records other than emergency room (eg. discharge summary)
(3) Emergency room records only (including associated X-rays or other lab reports)
(4) Private physician, walk-in or emergency clinic

UNOFFICIAL

(5) Lay coroner report
(6) E.M.S. personnel
(7) Interviewee
(8) Other source (specify): _____

(9) Police

INJURY SOURCE

FRONT

(01) Windshield
(02) Mirror
(03) Sunvisor
(04) Steering wheel rim
(05) Steering wheel hub/spoke
(06) Steering wheel (combination of codes 04 and 05)
(07) Steering column, transmission selector lever, other attachment
(08) Add-on equipment (e.g., CB, tape deck, air conditioner)
(09) Left instrument panel and below
(10) Center instrument panel and below
(11) Right instrument panel and below
(12) Glove compartment door
(13) Knee bolster
(14) Windshield including one or more of the following: front header, A-pillar, instrument panel, mirror, or steering assembly (driver side only)
(15) Windshield including one or more of the following: front header, A-pillar, instrument panel, or mirror (passenger side only)
(16) Other front object (specify): _____

LEFT SIDE

(20) Left side interior surface, excluding hardware or armrests
(21) Left side hardware or armrest
(22) Left A pillar
(23) Left B pillar
(24) Other left pillar (specify): _____

(25) Left side window glass or frame
(26) Left side window glass including one or more of the following: frame, window sill, A-pillar, B-pillar, or roof side rail
(27) Other left side object (specify): _____

RIGHT SIDE

(30) Right side interior surface, excluding hardware or armrests
(31) Right side hardware or armrest
(32) Right A pillar
(33) Right B pillar
(34) Other right pillar (specify): _____

(35) Right side window glass or frame
(36) Right side window glass including one or more of the following: frame, window sill, A-pillar, B-pillar, roof side rail
(37) Other right side object (specify): _____

INTERIOR

(40) Seat, back support
(41) Belt restraint webbing/buckle
(42) Belt restraint B-pillar attachment point
(43) Other restraint system component (specify): _____

(44) Head restraint system
(45) Air cushion
(46) Other occupants (specify): _____

(47) Interior loose objects
(48) Child safety seat (specify): _____

(49) Other interior object (specify): _____

ROOF

(50) Front header
(51) Rear header
(52) Roof left side rail
(53) Roof right side rail
(54) Roof or convertible top

FLOOR

(56) Floor including toe pan
(57) Floor or console mounted transmission lever, including console
(58) Parking brake handle
(59) Foot controls including parking brake

REAR

(60) Backlight (rear window)
(61) Backlight storage rack, door, etc.
(62) Other rear object (specify): _____

EXTERIOR OF OCCUPANT'S VEHICLE

(65) Hood
(66) Outside hardware (e.g., outside mirror, antenna)
(67) Other exterior surface or tires (specify): _____

(68) Unknown exterior objects

EXTERIOR OF OTHER MOTOR VEHICLE

(70) Front bumper
(71) Hood edge
(72) Other front of vehicle (specify): _____

(73) Hood
(74) Hood ornament
(75) Windshield, roof rail, A-pillar
(76) Side surface
(77) Side mirrors
(78) Other side protrusions (specify): _____

(79) Rear surface
(80) Undercarriage
(81) Tires and wheels
(82) Other exterior of other motor vehicle (specify): _____

(83) Unknown exterior of other motor vehicle

OTHER VEHICLE OR OBJECT IN THE ENVIRONMENT

(84) Ground
(85) Other vehicle or object (specify) _____

(86) Unknown vehicle or object

NONCONTACT INJURY

(90) Fire in vehicle
(91) Flying glass
(92) Other noncontact injury source (specify) _____

(97) Injured, unknown source

INJURY SOURCE CONFIDENCE LEVEL

(1) Certain
(2) Probable
(3) Possible
(9) Unknown

DIRECT/INDIRECT INJURY

(1) Direct contact injury
(2) Indirect contact injury
(3) Noncontact injury
(7) Injured, unknown source

OCCUPANT INJURY CLASSIFICATION

O.I.C. Body Region

(M) Abdomen
(Q) Ankle–foot
(A) Arm (upper)
(B) Back–thoracolumbar spine
(C) Chest
(E) Elbow
(F) Face
(R) Forearm
(H) Head–skull
(U) Injured, unknown region
(K) Knee
(L) Leg (lower)
(Y) Lower limb(s) (whole or unknown part)
(N) Neck–cervical spine
(P) Pelvic–hip
(S) Shoulder
(T) Thigh
(X) Upper limb(s) (whole or unknown part)
(O) Whole body
(W) Wrist–hand

Aspect of Injury

(A) Anterior–front
(C) Central
(I) Inferior–lower
(U) Injured, unknown aspect
(L) Left
(P) Posterior–back
(R) Right
(S) Superior–upper
(W) Whole region

Lesion

(A) Abrasion
(M) Amputation
(V) Avulsion
(B) Burn
(K) Concussion
(C) Contusion
(N) Crush
(G) Detachment, separation
(D) Dislocation
(F) Fracture
(Z) Fracture and dislocation
(U) Injured, unknown lesion
(L) Laceration
(O) Other
(P) Perforation, puncture
(R) Rupture
(S) Sprain
(T) Strain
(E) Total severance, transection

System/Organ

(W) All systems in region
(A) Arteries–veins
(B) Brain
(D) Digestive
(E) Ears
(O) Eye
(H) Heart
(U) Injured, unknown system
(I) Integumentary
(J) Joints
(K) Kidneys
(L) Liver
(M) Muscles
(N) Nervous system
(P) Pulmonary–lungs
(R) Respiratory
(S) Skeletal
(C) Spinal cord
(Q) Spleen
(T) Thyroid, other endocrine gland
(G) Urogenital
(V) Vertebrae

Abbreviated Injury Scale

(1) Minor injury
(2) Moderate injury
(3) Serious injury
(4) Severe injury
(5) Critical injury
(6) Maximum (untreatable)
(7) Injured, unknown severity

OFFICIAL INJURY DATA—SKELETAL INJURIES

Indicate the *Location, Lesion, Detail* (size, depth, fracture type, head injury clinical signs and neurological deficits), and *Source* of all injuries indicated by official sources (or from PAR or other unofficial sources if medical records and interviewee data are unavailable.)

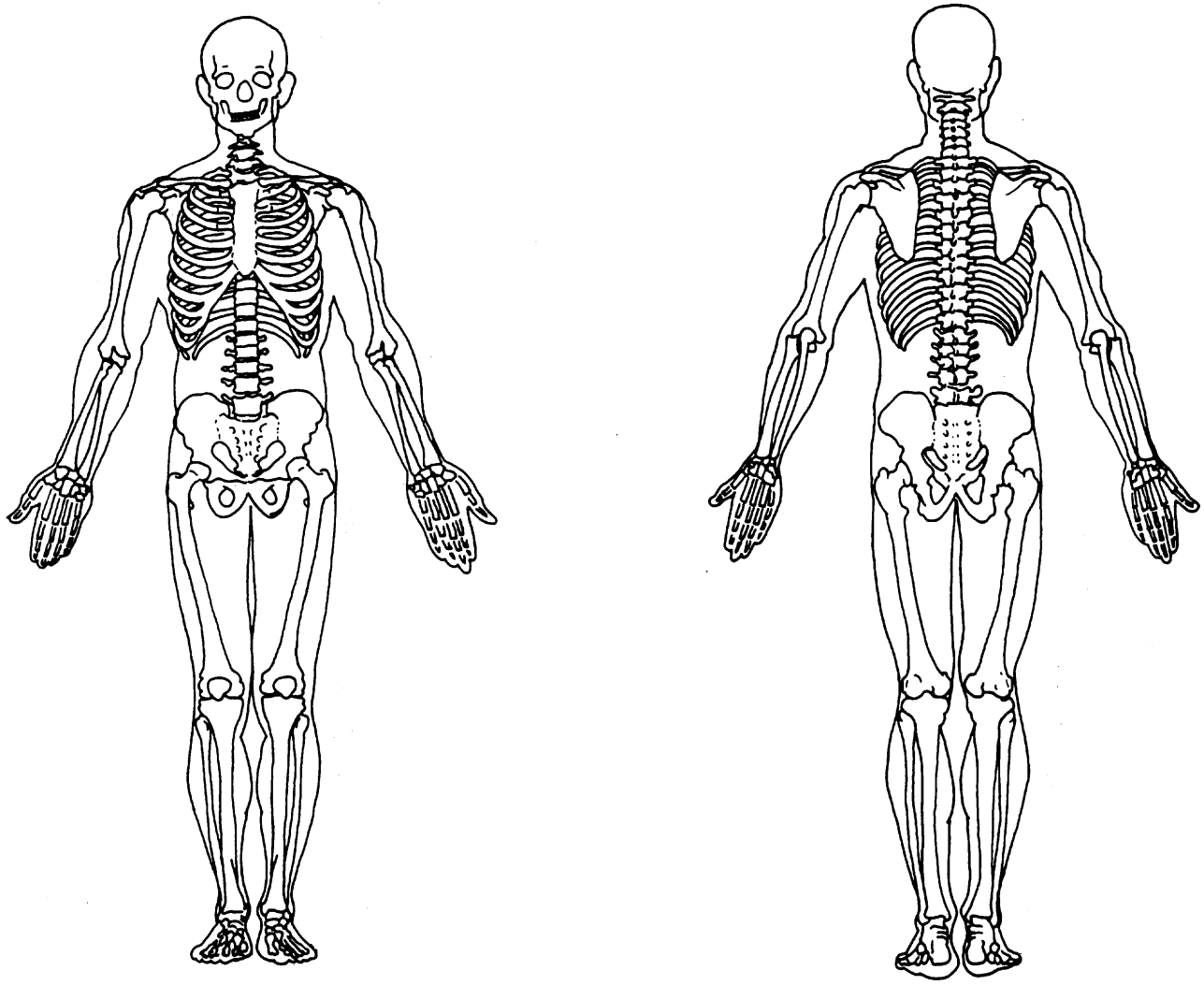

OFFICIAL INJURY DATA – INTERNAL INJURIES

Indicate the *Location, Lesion, Detail* (size, depth, fracture type, head injury clinical signs and neurological deficits), and *Source* of all injuries indicated by official sources (or from PAR or other unofficial sources if medical records and interviewee data are unavailable.)

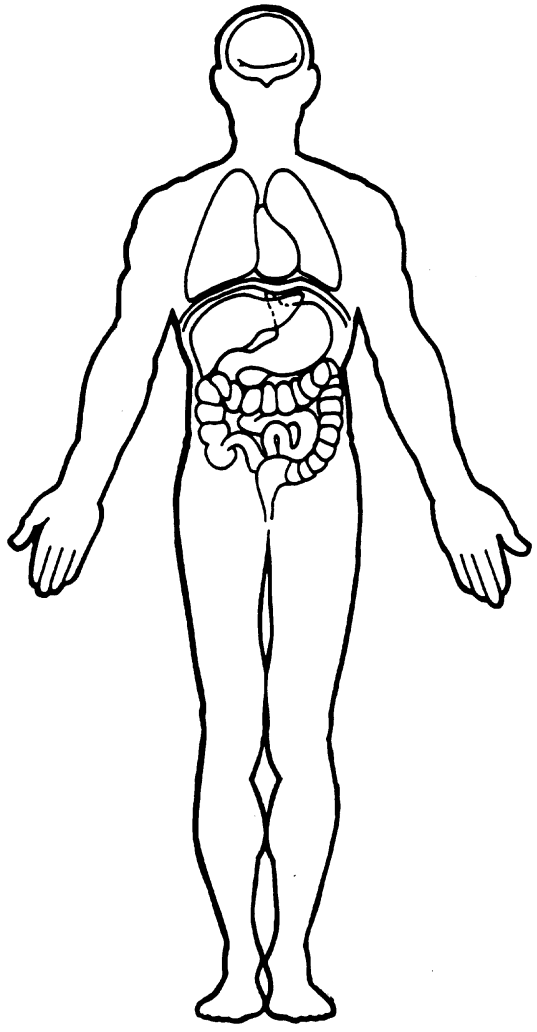

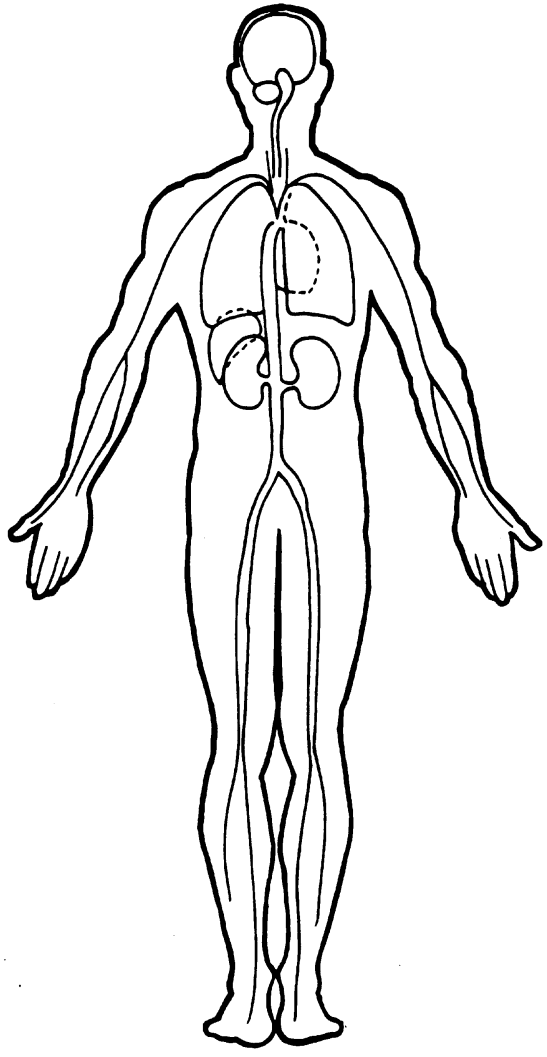

U.S. Department of Transportation
National Highway Traffic Safety Administration

Form Approved
O.M.B. No. 2127-0021
NATIONAL ACCIDENT SAMPLING SYSTEM
CRASHWORTHINESS DATA SYSTEM

OCCUPANT INJURY FORM

1. Primary Sampling Unit Number 51
2. Case Number–Stratum Ø42C
3. Vehicle Number Ø2
4. Occupant Number Ø2

INJURY DATA

Record below the actual injuries sustained by this occupant that were identified from the official and unofficial data sources. Remember not to double count an injury just because it was identified from two different sources. If greater than twenty injuries have been documented, encode the balance on the Occupant Injury Supplement.

	Source of Injury Data	O.I.C.–A.I.S. Body Region	Aspect	Lesion	System Organ	A.I.S. Severity	Injury Source	Injury Source Confidence Level	Direct/ Indirect Injury	Occupant Area Intrusion No.
1st	5. 3	6. R	7. R	8. L	9. I	10. 1	11. 91	12. 1	13. 3	14. ØØ
2nd	15. 3	16. R	17. R	18. C	19. I	20. 1	21. 91	22. 9	23. 7	24. 99
3rd	25. 3	26. R	27. R	28. A	29. I	30. 1	31. 91	32. 9	33. 7	34. 99
4th	35. 7	36. E	37. S	38. C	39. I	40. 1	41. 91	42. 9	43. 7	44. 99
5th	45. 7	46. N	47. P	48. I	49. M	50. 1	51. 91	52. 9	53. 7	54. 99
6th	55.	56.	57.	58.	59.	60.	61.	62.	63.	64.
7th	65.	66.	67.	68.	69.	70.	71.	72.	73.	74.
8th	75.	76.	77.	78.	79.	80.	81.	82.	83.	84.
9th	85.	86.	87.	88.	89.	90.	91.	92.	93.	94.
10th	95.	96.	97.	98.	99.	100.	101.	102.	103.	104.
11th	105.	106.	107.	108.	109.	110.	111.	112.	113.	114.
12th	115.	116.	117.	118.	119.	120.	121.	122.	123.	124.
13th	125.	126.	127.	128.	129.	130.	131.	132.	133.	134.
14th	135.	136.	137.	138.	139.	140.	141.	142.	143.	144.
15th	145.	146.	147.	148.	149.	150.	151.	152.	153.	154.
16th	155.	156.	157.	158.	159.	160.	161.	162.	163.	164.
17th	165.	166.	167.	168.	169.	170.	171.	172.	173.	174.
18th	175.	176.	177.	178.	179.	180.	181.	182.	183.	184.
19th	185.	186.	187.	188.	189.	190.	191.	192.	193.	194.
20th	195.	196.	197.	198.	199.	200.	201.	202.	203.	204.

HS Form 433B
1/88

This report is authorized by P.L. 89-563, Title 1, Section 106, 108, and 112. While you are not required to respond, your cooperation is needed to make the results of this data collection effort comprehensive, accurate, and timely.

OCCUPANT INJURY DATA SUPPLEMENT

	Source of Injury Data	O.I.C. – A.I.S.					Injury Source	Injury Source Confidence Level	Direct/ Indirect Injury	Occupant Area Intrusion No.
		Body Region	Aspect	Lesion	System Organ	A.I.S. Severity				
21st	—	—	—	—	—	—	— —	—	—	— —
22nd	—	—	—	—	—	—	— —	—	—	— —
23rd	—	—	—	—	—	—	— —	—	—	— —
24th	—	—	—	—	—	—	— —	—	—	— —
25th	—	—	—	—	—	—	— —	—	—	— —
26th	—	—	—	—	—	—	— —	—	—	— —
27th	—	—	—	—	—	—	— —	—	—	— —
28th	—	—	—	—	—	—	— —	—	—	— —
29th	—	—	—	—	—	—	— —	—	—	— —
30th	—	—	—	—	—	—	— —	—	—	— —
31st	—	—	—	—	—	—	— —	—	—	— —
32nd	—	—	—	—	—	—	— —	—	—	— —
33rd	—	—	—	—	—	—	— —	—	—	— —
34th	—	—	—	—	—	—	— —	—	—	— —
35th	—	—	—	—	—	—	— —	—	—	— —
36th	—	—	—	—	—	—	— —	—	—	— —
37th	—	—	—	—	—	—	— —	—	—	— —
38th	—	—	—	—	—	—	— —	—	—	— —
39th	—	—	—	—	—	—	— —	—	—	— —
40th	—	—	—	—	—	—	— —	—	—	— —
41st	—	—	—	—	—	—	— —	—	—	— —
42nd	—	—	—	—	—	—	— —	—	—	— —
43rd	—	—	—	—	—	—	— —	—	—	— —
44th	—	—	—	—	—	—	— —	—	—	— —
45th	—	—	—	—	—	—	— —	—	—	— —

OFFICIAL INJURY DATA—SOFT TISSUE INJURIES

Indicate the *Location, Lesion, Detail* (size, depth, fracture type, head injury clinical signs and neurological deficits), and *Source* of all injuries indicated by official sources (or from PAR or other unofficial sources if medical records and interviewee data are unavailable.)

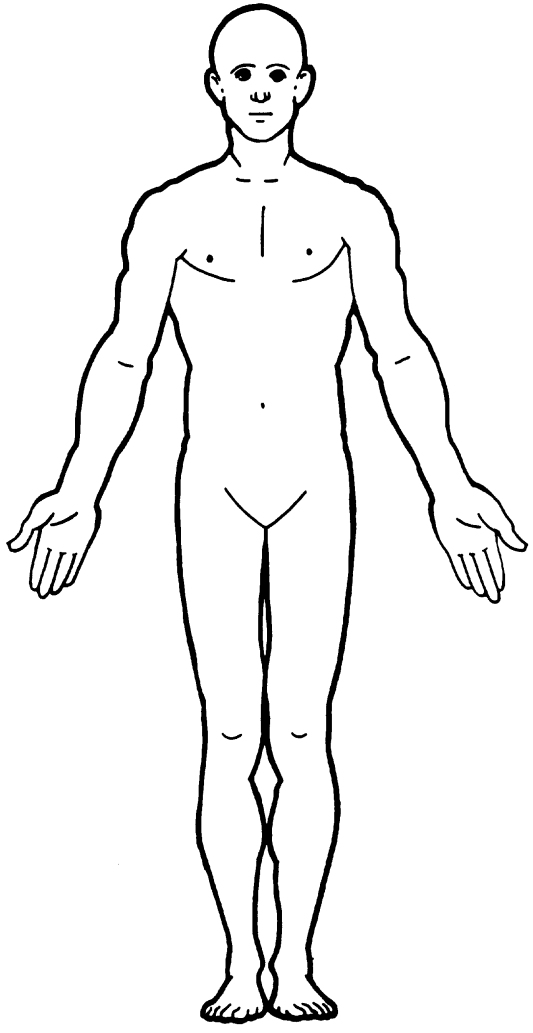

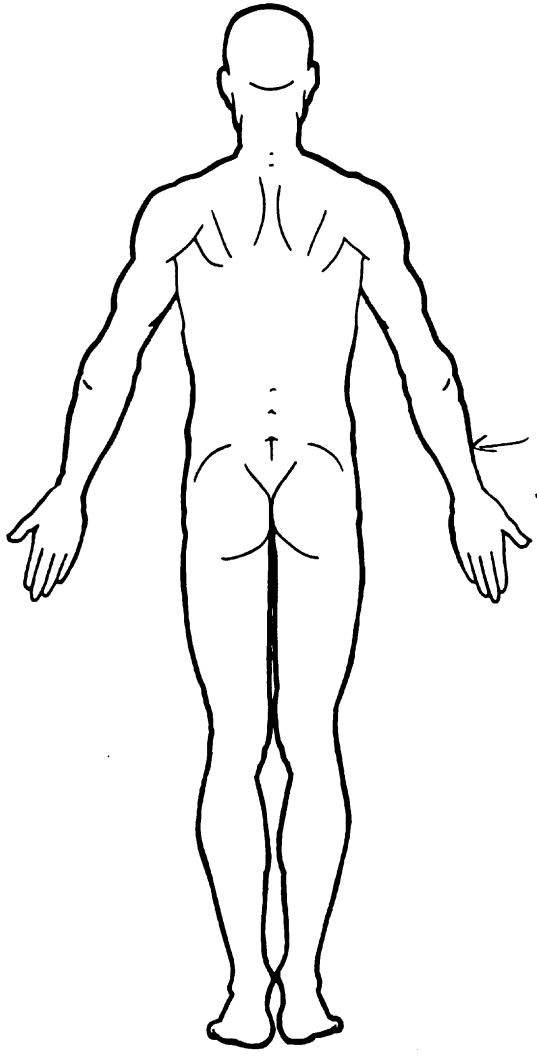

minor lacerations contusions and abrasions to (R) forearm

SOURCE OF INJURY DATA

OFFICIAL

(1) Autopsy records with or without hospital medical records
(2) Hospital medical records other than emergency room (eg. discharge summary)
(3) Emergency room records only (including associated X-rays or other lab reports)
(4) Private physician, walk-in or emergency clinic

UNOFFICIAL

(5) Lay coroner report
(6) E.M.S. personnel
(7) Interviewee
(8) Other source (specify): _____

(9) Police

INJURY SOURCE

FRONT

(01) Windshield
(02) Mirror
(03) Sunvisor
(04) Steering wheel rim
(05) Steering wheel hub/spoke
(06) Steering wheel (combination of codes 04 and 05)
(07) Steering column, transmission selector lever, other attachment
(08) Add-on equipment (e.g., CB, tape deck, air conditioner)
(09) Left instrument panel and below
(10) Center instrument panel and below
(11) Right instrument panel and below
(12) Glove compartment door
(13) Knee bolster
(14) Windshield including one or more of the following: front header, A-pillar, instrument panel, mirror, or steering assembly (driver side only)
(15) Windshield including one or more of the following: front header, A-pillar, instrument panel, or mirror (passenger side only)
(16) Other front object (specify): _____

LEFT SIDE

(20) Left side interior surface, excluding hardware or armrests
(21) Left side hardware or armrest
(22) Left A pillar
(23) Left B pillar
(24) Other left pillar (specify): _____

(25) Left side window glass or frame
(26) Left side window glass including one or more of the following: frame, window sill, A-pillar, B-pillar, or roof side rail
(27) Other left side object (specify): _____

RIGHT SIDE

(30) Right side interior surface, excluding hardware or armrests
(31) Right side hardware or armrest
(32) Right A pillar
(33) Right B pillar
(34) Other right pillar (specify): _____

(35) Right side window glass or frame
(36) Right side window glass including one or more of the following: frame, window sill, A-pillar, B-pillar, roof side rail
(37) Other right side object (specify): _____

INTERIOR

(40) Seat, back support
(41) Belt restraint webbing/buckle
(42) Belt restraint B-pillar attachment point
(43) Other restraint system component (specify): _____

(44) Head restraint system
(45) Air cushion
(46) Other occupants (specify): _____

(47) Interior loose objects
(48) Child safety seat (specify): _____

(49) Other interior object (specify): _____

ROOF

(50) Front header
(51) Rear header
(52) Roof left side rail
(53) Roof right side rail
(54) Roof or convertible top

FLOOR

(56) Floor including toe pan
(57) Floor or console mounted transmission lever, including console
(58) Parking brake handle
(59) Foot controls including parking brake

REAR

(60) Backlight (rear window)
(61) Backlight storage rack, door, etc.
(62) Other rear object (specify): _____

EXTERIOR OF OCCUPANT'S VEHICLE

(65) Hood
(66) Outside hardware (e.g., outside mirror, antenna)
(67) Other exterior surface or tires (specify): _____

(68) Unknown exterior objects

EXTERIOR OF OTHER MOTOR VEHICLE

(70) Front bumper
(71) Hood edge
(72) Other front of vehicle (specify): _____

(73) Hood
(74) Hood ornament
(75) Windshield, roof rail, A-pillar
(76) Side surface
(77) Side mirrors
(78) Other side protrusions (specify): _____

(79) Rear surface
(80) Undercarriage
(81) Tires and wheels
(82) Other exterior of other motor vehicle (specify): _____

(83) Unknown exterior of other motor vehicle

OTHER VEHICLE OR OBJECT IN THE ENVIRONMENT

(84) Ground
(85) Other vehicle or object (specify) _____

(86) Unknown vehicle or object

NONCONTACT INJURY

(90) Fire in vehicle
(91) Flying glass
(92) Other noncontact injury source (specify) _____

(97) Injured, unknown source

INJURY SOURCE CONFIDENCE LEVEL

(1) Certain
(2) Probable
(3) Possible
(9) Unknown

DIRECT/INDIRECT INJURY

(1) Direct contact injury
(2) Indirect contact injury
(3) Noncontact injury
(7) Injured, unknown source

OCCUPANT INJURY CLASSIFICATION

O.I.C. Body Region

(M) Abdomen
(Q) Ankle–foot
(A) Arm (upper)
(B) Back–thoracolumbar spine
(C) Chest
(E) Elbow
(F) Face
(R) Forearm
(H) Head–skull
(U) Injured, unknown region
(K) Knee
(L) Leg (lower)
(Y) Lower limb(s) (whole or unknown part)
(N) Neck–cervical spine
(P) Pelvic–hip
(S) Shoulder
(T) Thigh
(X) Upper limb(s) (whole or unknown part)
(O) Whole body
(W) Wrist–hand

Aspect of Injury

(A) Anterior–front
(C) Central
(I) Inferior–lower
(U) Injured, unknown aspect
(L) Left
(P) Posterior–back
(R) Right
(S) Superior–upper
(W) Whole region

Lesion

(A) Abrasion
(M) Amputation
(V) Avulsion
(B) Burn
(K) Concussion
(C) Contusion
(N) Crush
(G) Detachment, separation
(D) Dislocation
(F) Fracture
(Z) Fracture and dislocation
(U) Injured, unknown lesion
(L) Laceration
(O) Other
(P) Perforation, puncture
(R) Rupture
(S) Sprain
(T) Strain
(E) Total severance, transection

System/Organ

(W) All systems in region
(A) Arteries–veins
(B) Brain
(D) Digestive
(E) Ears
(O) Eye
(H) Heart
(U) Injured, unknown system
(I) Integumentary
(J) Joints
(K) Kidneys
(L) Liver
(M) Muscles
(N) Nervous system
(P) Pulmonary–lungs
(R) Respiratory
(S) Skeletal
(C) Spinal cord
(Q) Spleen
(T) Thyroid, other endocrine gland
(G) Urogenital
(V) Vertebrae

Abbreviated Injury Scale

(1) Minor injury
(2) Moderate injury
(3) Serious injury
(4) Severe injury
(5) Critical injury
(6) Maximum (untreatable)
(7) Injured, unknown severity

OFFICIAL INJURY DATA—SKELETAL INJURIES

Indicate the *Location, Lesion, Detail* (size, depth, fracture type, head injury clinical signs and neurological deficits), and *Source* of all injuries indicated by official sources (or from PAR or other unofficial sources if medical records and interviewee data are unavailable.)

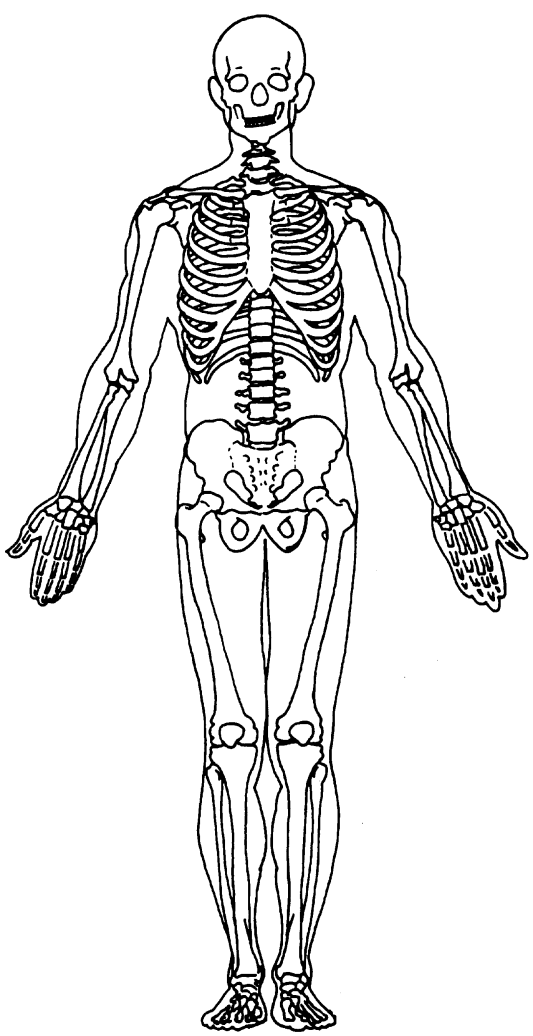

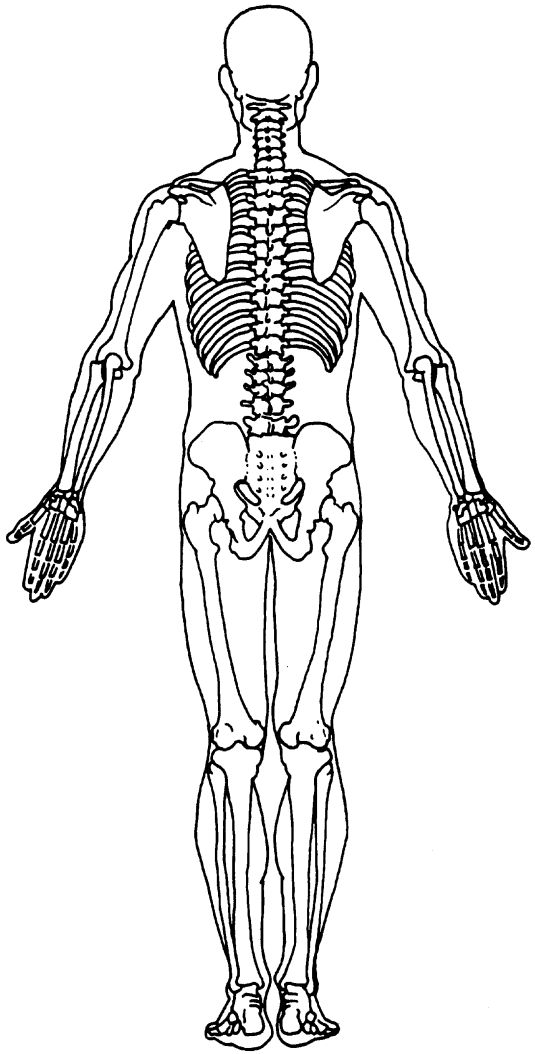

OFFICIAL INJURY DATA – INTERNAL INJURIES

Indicate the *Location, Lesion, Detail* (size, depth, fracture type, head injury clinical signs and neurological deficits), and *Source* of all injuries indicated by official sources (or from PAR or other unofficial sources if medical records and interviewee data are unavailable.)

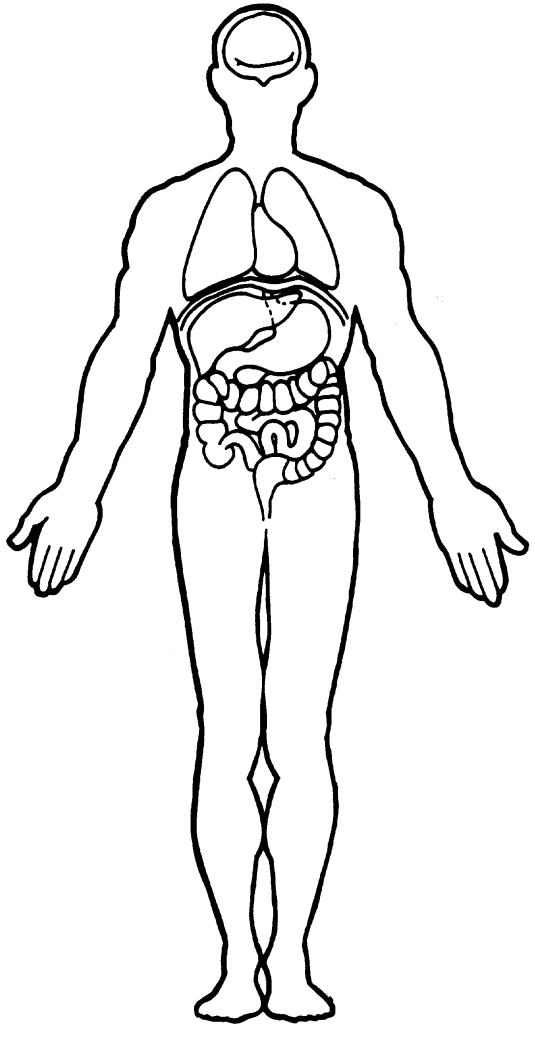

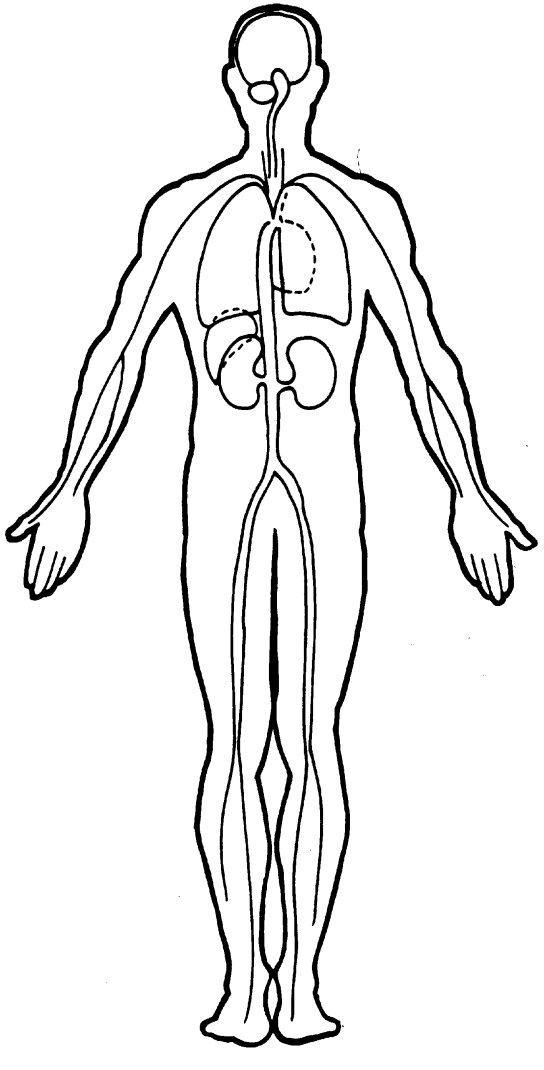

U.S. Department of Transportation
National Highway Traffic Safety Administration

Form Approved
O.M.B. No. 2127-0021
NATIONAL ACCIDENT SAMPLING SYSTEM
CRASHWORTHINESS DATA SYSTEM

OCCUPANT INJURY FORM

1. Primary Sampling Unit Number 51
2. Case Number–Stratum 042C
3. Vehicle Number 02
4. Occupant Number 03

INJURY DATA

Record below the actual injuries sustained by this occupant that were identified from the official and unofficial data sources. Remember not to double count an injury just because it was identified from two different sources. If greater than twenty injuries have been documented, encode the balance on the Occupant Injury Supplement.

	Source of Injury Data	O.I.C.–A.I.S. Body Region	Aspect	Lesion	System Organ	A.I.S. Severity	Injury Source	Injury Source Confidence Level	Direct/ Indirect Injury	Occupant Area Intrusion No.
1st	5. 2	6. M	7. 5	8. L	9. D	10. 3	11. 97	12. 9	13. 7	14. 99
2nd	15.	16.	17.	18.	19.	20.	21.	22.	23.	24.
3rd	25.	26.	27.	28.	29.	30.	31.	32.	33.	34.
4th	35.	36.	37.	38.	39.	40.	41.	42.	43.	44.
5th	45.	46.	47.	48.	49.	50.	51.	52.	53.	54.
6th	55.	56.	57.	58.	59.	60.	61.	62.	63.	64.
7th	65.	66.	67.	68.	69.	70.	71.	72.	73.	74.
8th	75.	76.	77.	78.	79.	80.	81.	82.	83.	84.
9th	85.	86.	87.	88.	89.	90.	91.	92.	93.	94.
10th	95.	96.	97.	98.	99.	100.	101.	102.	103.	104.
11th	105.	106.	107.	108.	109.	110.	111.	112.	113.	114.
12th	115.	116.	117.	118.	119.	120.	121.	122.	123.	124.
13th	125.	126.	127.	128.	129.	130.	131.	132.	133.	134.
14th	135.	136.	137.	138.	139.	140.	141.	142.	143.	144.
15th	145.	146.	147.	148.	149.	150.	151.	152.	153.	154.
16th	155.	156.	157.	158.	159.	160.	161.	162.	163.	164.
17th	165.	166.	167.	168.	169.	170.	171.	172.	173.	174.
18th	175.	176.	177.	178.	179.	180.	181.	182.	183.	184.
19th	185.	186.	187.	188.	189.	190.	191.	192.	193.	194.
20th	195.	196.	197.	198.	199.	200.	201.	202.	203.	204.

HS Form 433B
1/88

This report is authorized by P.L. 89-563, Title 1, Section 106, 108, and 112. While you are not required to respond, your cooperation is needed to make the results of this data collection effort comprehensive, accurate, and timely.

OCCUPANT INJURY DATA SUPPLEMENT

	Source of Injury Data	O.I.C. – A.I.S. Body Region	Aspect	Lesion	System Organ	A.I.S. Severity	Injury Source	Injury Source Confidence Level	Direct/ Indirect Injury	Occupant Area Intrusion No.
21st	—	—	—	—	—	—	— —	—	—	— —
22nd	—	—	—	—	—	—	— —	—	—	— —
23rd	—	—	—	—	—	—	— —	—	—	— —
24th	—	—	—	—	—	—	— —	—	—	— —
25th	—	—	—	—	—	—	— —	—	—	— —
26th	—	—	—	—	—	—	— —	—	—	— —
27th	—	—	—	—	—	—	— —	—	—	— —
28th	—	—	—	—	—	—	— —	—	—	— —
29th	—	—	—	—	—	—	— —	—	—	— —
30th	—	—	—	—	—	—	— —	—	—	— —
31st	—	—	—	—	—	—	— —	—	—	— —
32nd	—	—	—	—	—	—	— —	—	—	— —
33rd	—	—	—	—	—	—	— —	—	—	— —
34th	—	—	—	—	—	—	— —	—	—	— —
35th	—	—	—	—	—	—	— —	—	—	— —
36th	—	—	—	—	—	—	— —	—	—	— —
37th	—	—	—	—	—	—	— —	—	—	— —
38th	—	—	—	—	—	—	— —	—	—	— —
39th	—	—	—	—	—	—	— —	—	—	— —
40th	—	—	—	—	—	—	— —	—	—	— —
41st	—	—	—	—	—	—	— —	—	—	— —
42nd	—	—	—	—	—	—	— —	—	—	— —
43rd	—	—	—	—	—	—	— —	—	—	— —
44th	—	—	—	—	—	—	— —	—	—	— —
45th	—	—	—	—	—	—	— —	—	—	— —

OFFICIAL INJURY DATA—SOFT TISSUE INJURIES

Indicate the *Location, Lesion, Detail* (size, depth, fracture type, head injury clinical signs and neurological deficits), and *Source* of all injuries indicated by official sources (or from PAR or other unofficial sources if medical records and interviewee data are unavailable.)

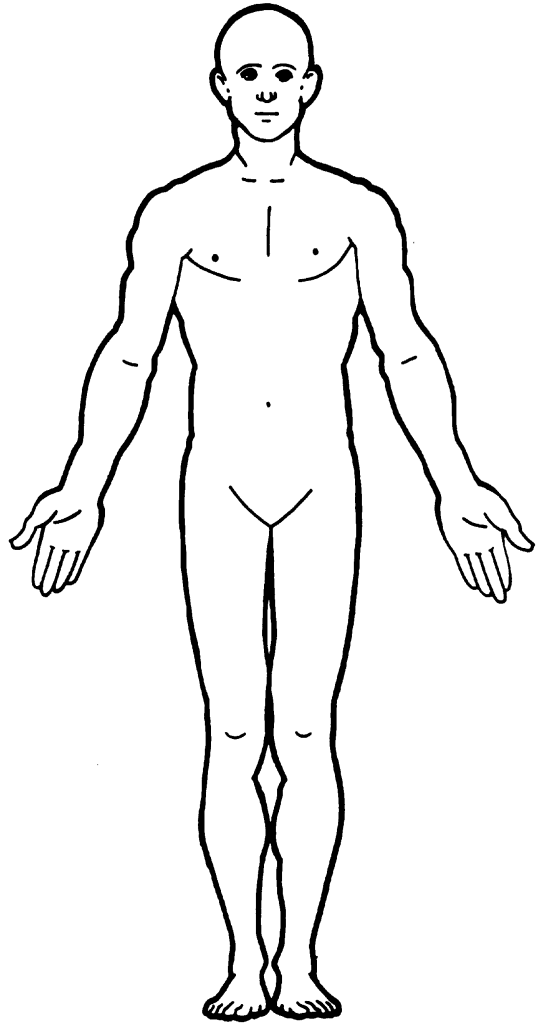

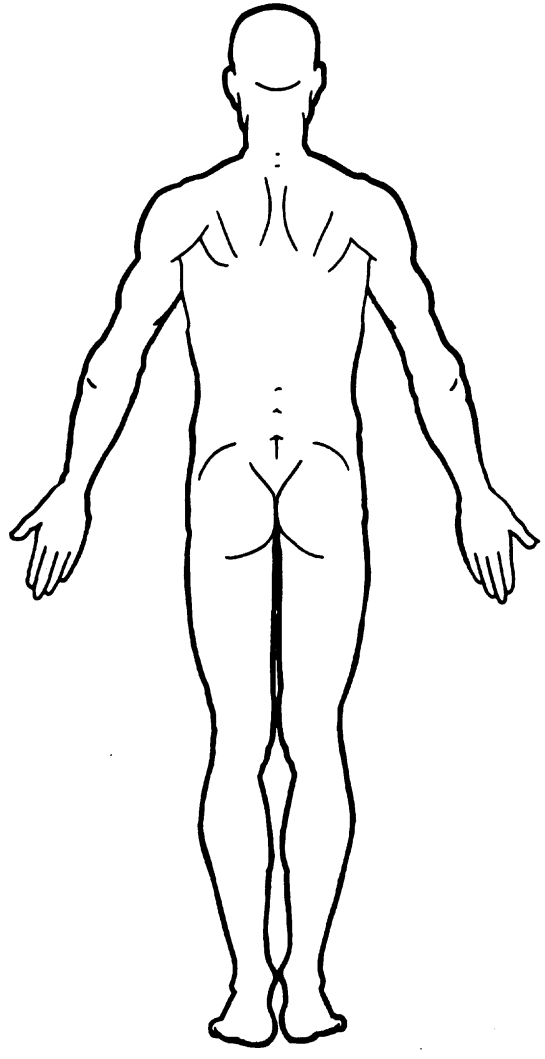

SOURCE OF INJURY DATA

OFFICIAL

(1) Autopsy records with or without hospital medical records
(2) Hospital medical records other than emergency room (eg. discharge summary)
(3) Emergency room records only (including associated X-rays or other lab reports)
(4) Private physician, walk-in or emergency clinic

UNOFFICIAL

(5) Lay coroner report
(6) E.M.S. personnel
(7) Interviewee
(8) Other source (specify): _____

(9) Police

INJURY SOURCE

FRONT

(01) Windshield
(02) Mirror
(03) Sunvisor
(04) Steering wheel rim
(05) Steering wheel hub/spoke
(06) Steering wheel (combination of codes 04 and 05)
(07) Steering column, transmission selector lever, other attachment
(08) Add-on equipment (e.g., CB, tape deck, air conditioner)
(09) Left instrument panel and below
(10) Center instrument panel and below
(11) Right instrument panel and below
(12) Glove compartment door
(13) Knee bolster
(14) Windshield including one or more of the following: front header, A-pillar, instrument panel, mirror, or steering assembly (driver side only)
(15) Windshield including one or more of the following: front header, A-pillar, instrument panel, or mirror (passenger side only)
(16) Other front object (specify): _____

LEFT SIDE

(20) Left side interior surface, excluding hardware or armrests
(21) Left side hardware or armrest
(22) Left A pillar
(23) Left B pillar
(24) Other left pillar (specify): _____

(25) Left side window glass or frame
(26) Left side window glass including one or more of the following: frame, window sill, A-pillar, B-pillar, or roof side rail
(27) Other left side object (specify): _____

RIGHT SIDE

(30) Right side interior surface, excluding hardware or armrests
(31) Right side hardware or armrest
(32) Right A pillar
(33) Right B pillar
(34) Other right pillar (specify): _____

(35) Right side window glass or frame
(36) Right side window glass including one or more of the following: frame, window sill, A-pillar, B-pillar, roof side rail
(37) Other right side object (specify): _____

INTERIOR

(40) Seat, back support
(41) Belt restraint webbing/buckle
(42) Belt restraint B-pillar attachment point
(43) Other restraint system component (specify): _____

(44) Head restraint system
(45) Air cushion
(46) Other occupants (specify): _____

(47) Interior loose objects
(48) Child safety seat (specify): _____

(49) Other interior object (specify): _____

ROOF

(50) Front header
(51) Rear header
(52) Roof left side rail
(53) Roof right side rail
(54) Roof or convertible top

FLOOR

(56) Floor including toe pan
(57) Floor or console mounted transmission lever, including console
(58) Parking brake handle
(59) Foot controls including parking brake

REAR

(60) Backlight (rear window)
(61) Backlight storage rack, door, etc.
(62) Other rear object (specify): _____

EXTERIOR OF OCCUPANT'S VEHICLE

(65) Hood
(66) Outside hardware (e.g., outside mirror, antenna)
(67) Other exterior surface or tires (specify): _____

(68) Unknown exterior objects

EXTERIOR OF OTHER MOTOR VEHICLE

(70) Front bumper
(71) Hood edge
(72) Other front of vehicle (specify): _____

(73) Hood
(74) Hood ornament
(75) Windshield, roof rail, A-pillar
(76) Side surface
(77) Side mirrors
(78) Other side protrusions (specify): _____

(79) Rear surface
(80) Undercarriage
(81) Tires and wheels
(82) Other exterior of other motor vehicle (specify): _____

(83) Unknown exterior of other motor vehicle

OTHER VEHICLE OR OBJECT IN THE ENVIRONMENT

(84) Ground
(85) Other vehicle or object (specify) _____

(86) Unknown vehicle or object

NONCONTACT INJURY

(90) Fire in vehicle
(91) Flying glass
(92) Other noncontact injury source (specify) _____

(97) Injured, unknown source

INJURY SOURCE CONFIDENCE LEVEL

(1) Certain
(2) Probable
(3) Possible
(9) Unknown

DIRECT/INDIRECT INJURY

(1) Direct contact injury
(2) Indirect contact injury
(3) Noncontact injury
(7) Injured, unknown source

OCCUPANT INJURY CLASSIFICATION

O.I.C. Body Region

(M) Abdomen
(Q) Ankle–foot
(A) Arm (upper)
(B) Back–thoracolumbar spine
(C) Chest
(E) Elbow
(F) Face
(R) Forearm
(H) Head–skull
(U) Injured, unknown region
(K) Knee
(L) Leg (lower)
(Y) Lower limb(s) (whole or unknown part)
(N) Neck–cervical spine
(P) Pelvic–hip
(S) Shoulder
(T) Thigh
(X) Upper limb(s) (whole or unknown part)
(O) Whole body
(W) Wrist–hand

Aspect of Injury

(A) Anterior–front
(C) Central
(I) Inferior–lower
(U) Injured, unknown aspect
(L) Left
(P) Posterior–back
(R) Right
(S) Superior–upper
(W) Whole region

Lesion

(A) Abrasion
(M) Amputation
(V) Avulsion
(B) Burn
(K) Concussion
(C) Contusion
(N) Crush
(G) Detachment, separation
(D) Dislocation
(F) Fracture
(Z) Fracture and dislocation
(U) Injured, unknown lesion
(L) Laceration
(O) Other
(P) Perforation, puncture
(R) Rupture
(S) Sprain
(T) Strain
(E) Total severance, transection

System/Organ

(W) All systems in region
(A) Arteries–veins
(B) Brain
(D) Digestive
(E) Ears
(O) Eye
(H) Heart
(U) Injured, unknown system
(I) Integumentary
(J) Joints
(K) Kidneys
(L) Liver
(M) Muscles
(N) Nervous system
(P) Pulmonary–lungs
(R) Respiratory
(S) Skeletal
(C) Spinal cord
(Q) Spleen
(T) Thyroid, other endocrine gland
(G) Urogenital
(V) Vertebrae

Abbreviated Injury Scale

(1) Minor injury
(2) Moderate injury
(3) Serious injury
(4) Severe injury
(5) Critical injury
(6) Maximum (untreatable)
(7) Injured, unknown severity

OFFICIAL INJURY DATA—SKELETAL INJURIES

Indicate the *Location, Lesion, Detail* (size, depth, fracture type, head injury clinical signs and neurological deficits), and *Source* of all injuries indicated by official sources (or from PAR or other unofficial sources if medical records and interviewee data are unavailable.)

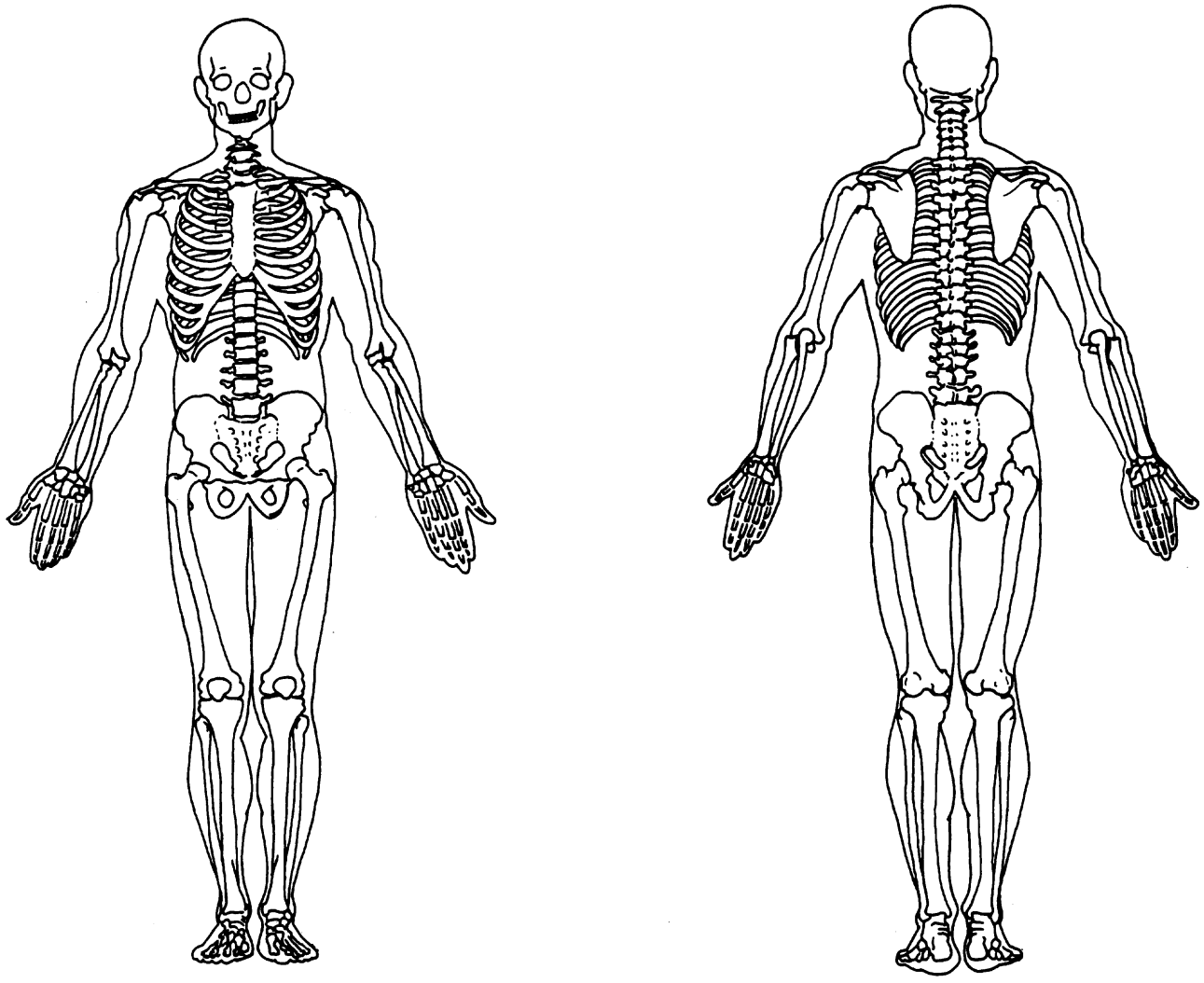

OFFICIAL INJURY DATA – INTERNAL INJURIES

Indicate the *Location, Lesion, Detail* (size, depth, fracture type, head injury clinical signs and neurological deficits), and *Source* of all injuries indicated by official sources (or from PAR or other unofficial sources if medical records and interviewee data are unavailable.)

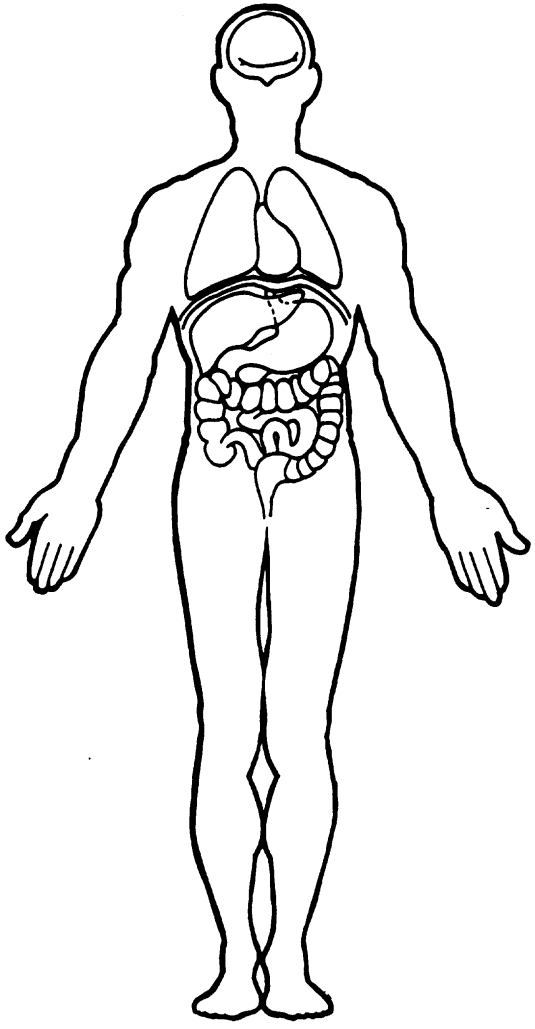

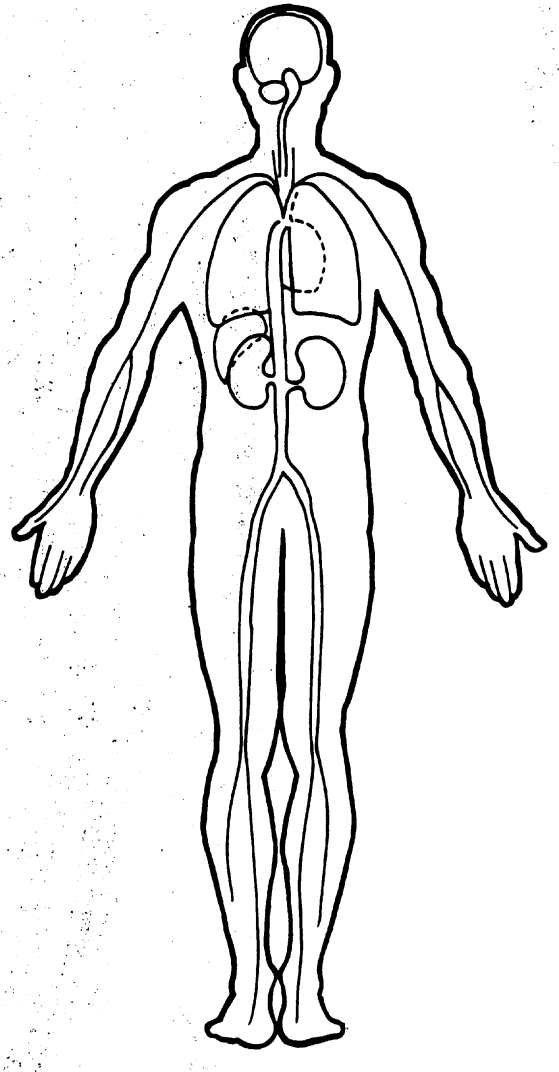

BEST AVAILABLE

US Department of Transportation
National Highway Traffic Safety Administration

NATIONAL ACCIDENT SAMPLING SYSTEM
CRASHWORTHINESS DATA SYSTEM

CRASHPC PROGRAM SUMMARY

Identifying Title

Primary Sampling Unit	Case No. – Stratum	Accident Event Sequence No.	Date (mm dd yy)
51	042C	01	[redacted] 88

CRASHPC Vehicle Identification

	Year	Make	Model	NASS Veh. No.
Vehicle 1	1983	Pontiac	Catalina	01
Vehicle 2	1984	Chevrolet	Blazer	02

GENERAL INFORMATION

	VEHICLE 1	VEHICLE 2
Size	6	2
Weight	4326 + 425 + 50 = 4801 (Curb + Occupant(s) + Cargo)	2897 + 345 + 50 = 3292 (Curb + Occupant(s) + Cargo)
CDC	03FDEW1	11LZEW3
PDOF	060	-030
Stiffness	6	2

SCENE INFORMATION

Rest and Impact Positions [✓] No, ***Go To Damage Information*** [ ] Yes

	VEHICLE 1	VEHICLE 2
Rest Position		
X	___.___	___.___
Y	___.___	___.___
PSI	___.___	___.___
Impact Position		
X	___.___	___.___
Y	___.___	___.___
PSI	___.___	___.___
Slip Angle	___	___

VEHICLE MOTION

Sustained Contact [✓] No [ ] Yes

	VEHICLE 1	VEHICLE 2
Skidding	[ ] No [ ] Yes	[ ] No [ ] Yes
Skidding Stop Before Rest	[ ] No [ ] Yes	[ ] No [ ] Yes
End-of-Skidding Position		
X	___.___	___.___
Y	___.___	___.___
PSI	___.___	___.___
Curved Path	[ ] No [ ] Yes	[ ] No [ ] Yes
Point on Path		
X	___.___ Y ___.___	___.___ Y ___.___
Rotation Direction	[ ] None [ ] CW [ ] CCW	[ ] None [ ] CW [ ] CCW
Rotation > 360°	[ ] No [ ] Yes	[ ] No [ ] Yes

HS Form 435D
1/88

FRICTION INFORMATION

Coefficient of Friction . ___ ___ ___

Rolling Resistance Option ___

Vehicle 1 Rolling Resistance

LF ___ . ___ ___ RF ___ . ___ ___

LR ___ . ___ ___ RR ___ . ___ ___

Vehicle 2 Rolling Resistance

LF ___ . ___ ___ RF ___ . ___ ___

LR ___ . ___ ___ RR ___ . ___ ___

TRAJECTORY INFORMATION

Trajectory Data [ ] No [ ] Yes

If No, Go To Damage Information

Vehicle 1 Steer Angles

LF ___ ___ ___ RF ___ ___ ___

LR ___ ___ ___ RR ___ ___ ___

Vehicle 2 Steer Angles

LF ___ ___ ___ RF ___ ___ ___

LR ___ ___ ___ RR ___ ___ ___

Terrain Boundary [ ] No [ ] Yes

First Point

X ___ ___ ___ . ___ Y ___ ___ ___ . ___

Second Point

X ___ ___ ___ . ___ Y ___ ___ ___ . ___

Secondary Friction Coefficient . ___ ___ ___

DAMAGE INFORMATION

	VEHICLE 1	VEHICLE 2
Damage Length	745.5	831.1
Crush Depths C1	8.0	2.3
C2	7.9	10.8
C3	7.9	5.0
C4	7.8	9.0
C5	7.9	4.4
C6	8.0	0.0
Damage Offset	± 0.0	± 52.7

IF THIS COMMON IMPACT WAS WITH A MOTOR VEHICLE *NOT IN TRANSPORT*, FILL IN THE INFORMATION BELOW.

Model Year: _____

Make: _____

Model: _____

VIN: _____

The Weight, CDC, Scene Data and Damage Information for this vehicle should be recorded above.

Complete and ATTACH the appropriate vehicle damage sketch and dimensions to the Form.

SUMMARY OF CRASHPC RESULTS (USING SPINOUT)

BEST AVAILABLE

51 042C

SPEED CHANGE (DAMAGE)		TOTAL(MPH)	LONG.(MPH)	LAT.(MPH)	ANG.(DEG)
	VEH #1	10.3	-5.1	-8.9	60.0
	VEH #2	15.0	-13.0	7.5	-30.0

ENERGY DISSIPATED BY DAMAGE VEH#1: 63980.8 FT-LB VEH#2: 33950.0 FT-LB

BEST AVAILABLE

SUMMARY OF DAMAGE DATA (* INDICATES DEFAUL T VALUE)

VEHICLE # 1			VEHICLE # 2		
TYPE---------	CATEGORY 6		TYPE---------	CATEGORY 2	
WEIGHT------	4801.0 LBS.		WEIGHT------	3292.0 LBS.	
CDC----------	03FDEW1		CDC----------	11LZEW3	
L----------	74.5 IN.		L----------	83.1 IN.	
C1----------	8.0 IN.		C1----------	2.3 IN.	
C2----------	7.9 IN.		C2----------	10.8 IN.	
C3----------	7.9 IN.		C3----------	5.0 IN.	
C4----------	7.8 IN.		C4----------	9.0 IN.	
C5----------	7.9 IN.		C5----------	4.4 IN.	
C6----------	8.0 IN.		C6----------	.0 IN.	
D----------	.0		D----------	-52.7	
RHO----------	1.00	*	RHO----------	1.00	*
ANG----------	60.0 DEG.		ANG----------	-30.0 DEG.	
D'----------	.0 IN.		D'----------	-58.2 IN.	

BEST AVAILABLE

DIMENSIONS AND INERTIAL PROPERTIES

A1	=	60.1	IN.	A2	=	46.3	IN.
B1	=	65.1	IN.	B2	=	50.1	IN.
TR1	=	63.6	IN.	TR2	=	54.6	IN.
I1	=	52791.0	LB-SEC**2-IN	I2	=	25259.2	LB-SEC**2-IN
M1	=	12.483	LB-SEC**2/IN	M2	=	8.560	LB-SEC**2/IN
XF1	=	104.2	IN.	XF2	=	83.3	IN.
XR1	=	-125.2	IN.	XR2	=	-91.6	IN.
YS1	=	39.9	IN.	YS2	=	33.6	IN.

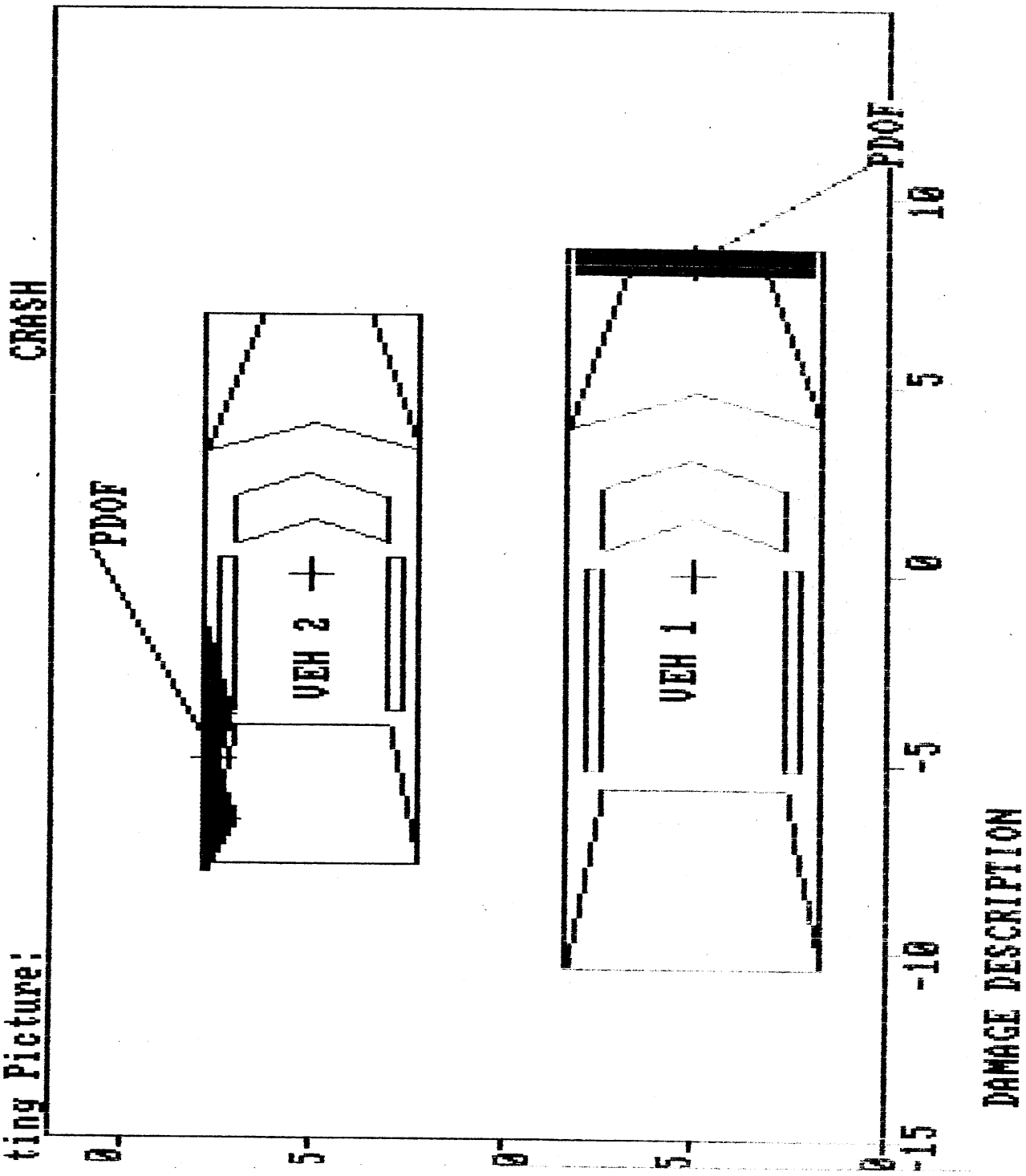

HH0191 2 If OCCUPANT POSITION OA10 equals 11 or 13, then MANUAL BELT
HH0192 AVAILABILITY OA17 should equal 3 or 4.

HH0191 2 If OCCUPANT POSITION OA10 equals 11 or 13, then MANUAL BELT
HH0192 AVAILABILITY OA17 should equal 3 or 4.

GG0421 2 If ROLLOVER GV24 equals 1-9, then BASIS FOR DELTA V GV29 should
GG0422 equal 4 or 5.

HH1091 2 If TREATMENT OA35 equals 0, 4 or 5, then WORKING DAYS LOST OA38
HH1092 should equal 00, 01, 97 or 99.

```
51042C000000[redacted]881.1210000000000223350000007[redacted]88[redacted]8800000[redacted]88
51042C000100[redacted]881.1210000000000105F0212L
51042C000200[redacted]881.1210000000000105R63000
51042C000300[redacted]881.1210000000000105B68000
51042C000400[redacted]881.1210000000000105B51000
51042C000500[redacted]881.1210000000000105L50000
51042C000600[redacted]881.1210000000000212R63000
51042C000700[redacted]881.1210000000000212N3100N
51042C01000021      1.12 0000000007322002022L57R3[redacted]    19909655018810303043
01000000270180110-05-09064011
51042C01000031      1.12 000000000010222FDEW01045106BREN01075080808080808 000070
000000020600 000111240
51042C01000041      1.12 00000000000110000000020000088001010001020200010202000
51042C01000042      1.12 000000000231932211922
              100 00 00 00000128080
51042C01010051      1.12 0000010002416814511100000080000000000072000000000000000
0000000000000
51042C01020051      1.12 0000000009916514021200000030000000000720000000000000000
0000000000000
51042C01030051      1.12 0000010003216914021300000080000000000720000000000000000
0000000000000
51042C02000021      1.12 0000010008420470141G8CS18B5E3[redacted]9909655078910303029
01000200180270115-13+08034011
51042C02000031      1.12 000000000010111LZEW03073100TDD003083021105090400-053
                011005
51042C02000041      1.12 00000000098130030000036666668000000001223338012211220
51042C02000042      1.12 000000000131451111441231321211113110611111511131511
              200 00 00 00000077080
51042C02010051      1.12 0000010003117216511100000040411000410210000000000002420
0050000000004
51042C02010161      1.12 0000000003SLCI1411100
51042C02010261      1.12 0000000003WRAI1979799
51042C02010361      1.12 0000000003WLAI1979799
51042C02010461      1.12 0000000003MRCI1411100
51042C02020051      1.12 0000000002826011521300000040411000410210000000000002420
0970000000005
51042C02020161      1.12 0000000003RRLI1911300
51042C02020261      1.12 0000000003RRCI1979799
51042C02020361      1.12 0000000003RRAI1979799
51042C02020461      1.12 0000000007FSCI1979799
51042C02020561      1.12 0000000007NPTM1979799
51042C02030051      1.12 0000000001115906522310000030361000300510000000000003320
6970000000001
51042C02030161      1.12 0000000002MSLD3979799
51042C88888888[redacted]881.12 000000000YY0202YYY0301Y00000000000000000000000000000000
00000000
51042C99999999[redacted]881.12 0000000000000000000000001000000000000000000000000000030000
00000000
```

BEST AVAILABLE

1988 NATIONAL ACCIDENT SAMPLING SYSTEM

ERROR SUMMARY SCREEN

[redacted] 1988

CURRENT VERSION: 1.12

FORM NAME	NUMBER OF DOLLAR SIGNS	NUMBER OF LEVEL 1 ERRORS	NUMBER OF LEVEL 2 ERRORS	VERSION NUMBER CONSISTENT
Accident	0	0	0	Y
General Vehicle	0	0	1	Y
Vehicle Exterior	0	0	0	Y
Vehicle Interior	0	0	0	Y
Occupant Assessment	0	0	3	Y
Occupant Injury	0	0	0	Y
Total Inter Errors		0	0	
Total Case Errors	0	0	4	

BEST AVAILABLE

BEST AVAILABLE

U.S. Department of Transportation
National Highway Traffic Safety Administration

SLIDE INDEX

NATIONAL ACCIDENT SAMPLING SYSTEM
CRASHWORTHINESS DATA SYSTEM

Primary Sampling Unit Number 51 Case Number–Stratum 042C

Slide No.	Vehicle No.	Direction of Picture	Description of Slide Subject Matter
01-14	V1	West	V1 Direction of travel
15-20	V1	East	V1 Direction of Approach
21-32	V2	South	V2 Direction of travel
33-39	V2	North	V2 Direction of Approach
40-76	V1	CW	V1 EXTERIOR
77-93	V1		INTERIOR
* 94-130	V2	CCW	V2 EXTERIOR
131-144	V2		INTERIOR

HS Form 434B
1/88

* Photos of c-measurements show the freespace clips to be 2" out of place at each location. The 2" stand adjustment was not allowed for when placing clips.

Slide No.	Vehicle No.	Direction of Picture	Description of Slide Subject Matter

PSU 51-042C (1988) #1

PSU 51-042C (1988) #2

PSU 51-042C (1988) #3

PSU 51-042C (1988) #4

PSU 51-042C (1988) #5

PSU 51-042C (1988) #6

PSU 51-042C (1988) #7

PSU 51-042C (1988) #8

PSU 51-042C (1988) #9

PSU 51-042C (1988) #10

PSU 51-042C (1988) #11

PSU 51-042C (1988) #12

PSU 51-042C (1988) #13

PSU 51-042C (1988) #14

PSU 51-042C (1988) #15

PSU 51-042C (1988) #16

PSU 51-042C (1988) #17

PSU 51-042C (1988) #18

PSU 51-042C (1988) #19

PSU 51-042C (1988) #20

PSU 51-042C (1988) #21

PSU 51-042C (1988) #22

PSU 51-042C (1988) #23

PSU 51-042C (1988) #24

PSU 51-042C (1988) #25

PSU 51-042C (1988) #26

PSU 51-042C (1988) #27

PSU 51-042C (1988) #28

PSU 51-042C (1988) #29

PSU 51-042C (1988) #30

PSU 51-042C (1988) #31

PSU 51-042C (1988) #32

PSU 51-042C (1988) #33
Best Available

PSU 51-042C (1988) #34
Best Available

PSU 51-042C (1988) #35

PSU 51-042C (1988) #36

PSU 51-042C (1988) #37

PSU 51-042C (1988) #38

PSU 51-042C (1988) #39

PSU 51-042C (1988) #40

PSU 51-042C (1988) #41

PSU 51-042C (1988) #42
Best Available

PSU 51-042C (1988) #43
Best Available

PSU 51-042C (1988) #44
Best Available

PSU 51-042C (1988) #45
Best Available

PSU 51-042C (1988) #46

PSU 51-042C (1988) #47
Best Available

PSU 51-042C (1988) #48
Best Available

PSU 51-042C (1988) #49
Best Available

PSU 51-042C (1988) #50
Best Available

PSU 51-042C (1988) #51
Best Available

PSU 51-042C (1988) #52
Best Available

PSU 51-042C (1988) #53
Best Available

PSU 51-042C (1988) #54
Best Available

PSU 51-042C (1988) #55

PSU 51-042C (1988) #56

PSU 51-042C (1988) #57

PSU 51-042C (1988) #58

PSU 51-042C (1988) #59

PSU 51-042C (1988) #60
Best Available

PSU 51-042C (1988) #61

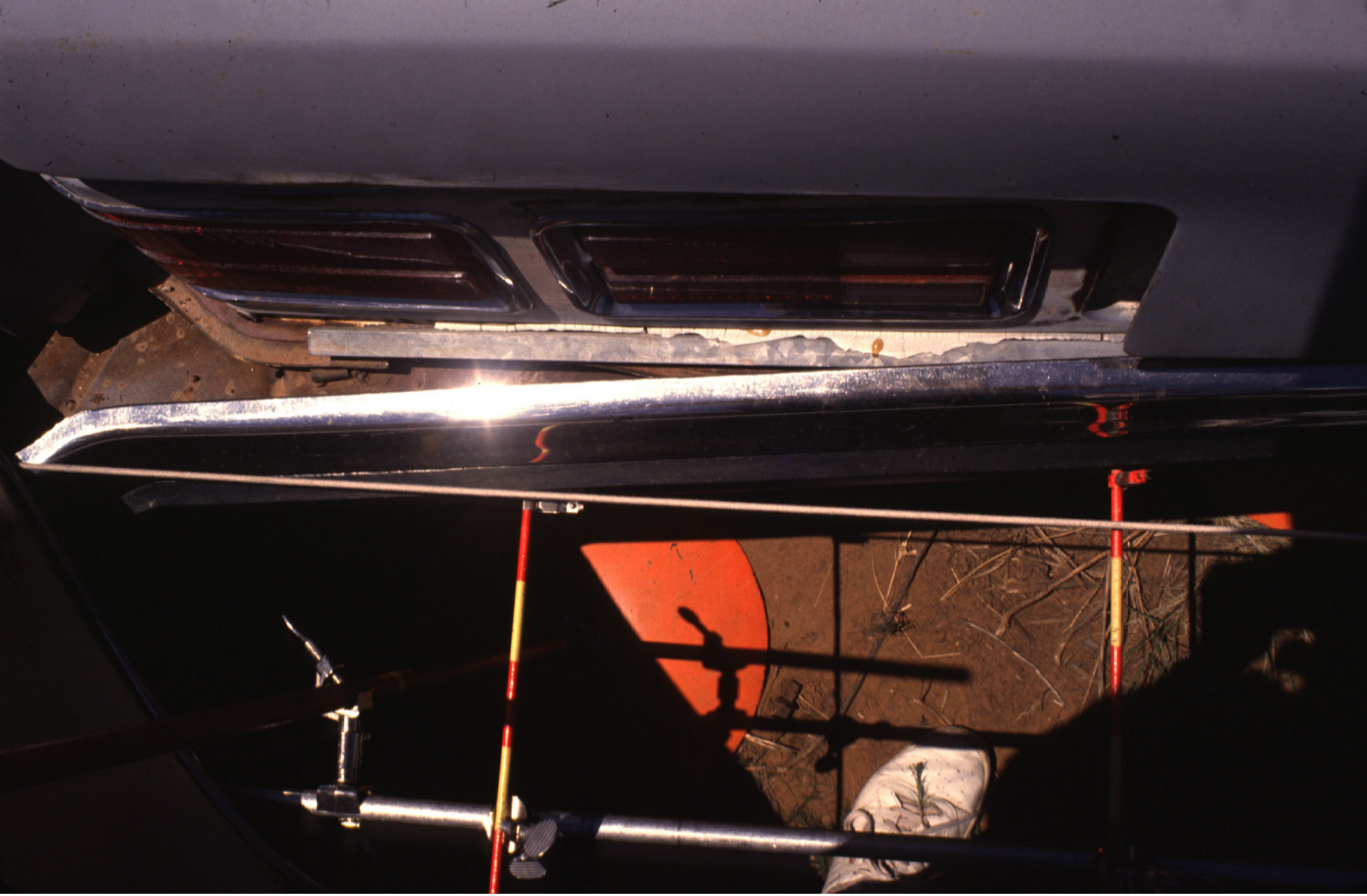

PSU 51-042C (1988) #62

PSU 51-042C (1988) #63
Best Available

PSU 51-042C (1988) #64

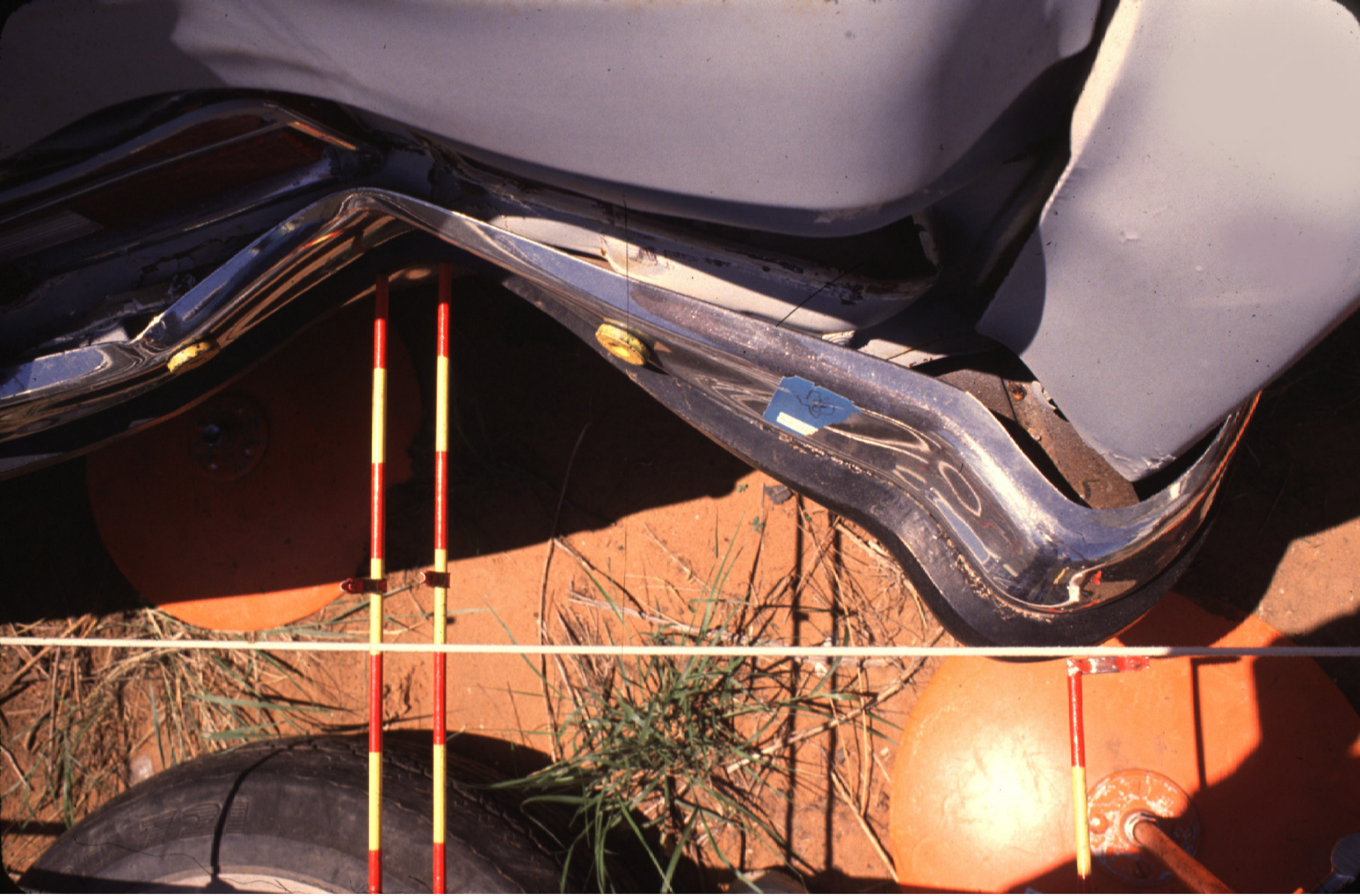

PSU 51-042C (1988) #65

PSU 51-042C (1988) #66

PSU 51-042C (1988) #67
Best Available

PSU 51-042C (1988) #68

PSU 51-042C (1988) #69

PSU 51-042C (1988) #70

PSU 51-042C (1988) #71

PSU 51-042C (1988) #72

PSU 51-042C (1988) #73

PSU 51-042C (1988) #74

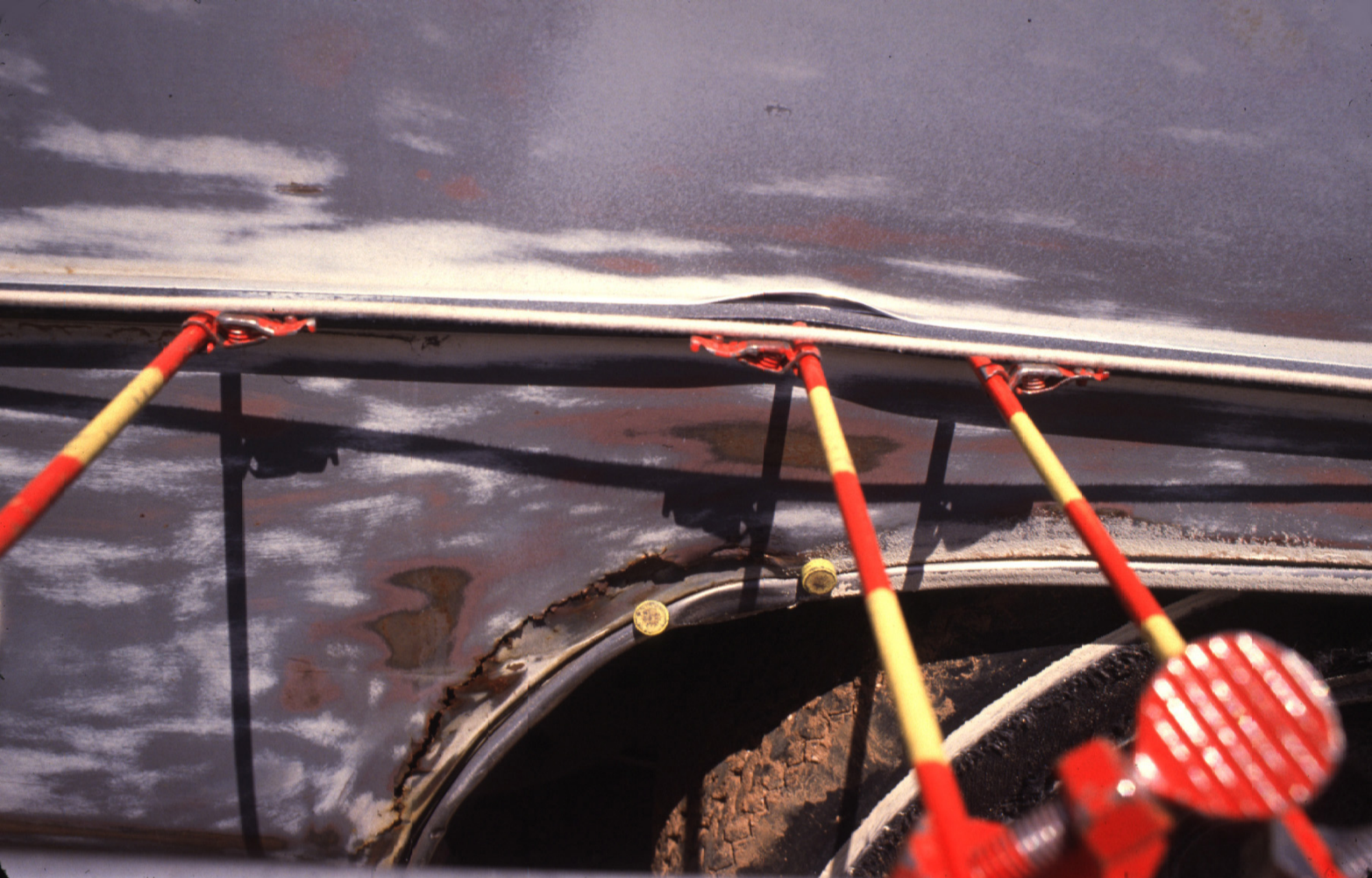

PSU 51-042C (1988) #75

PSU 51-042C (1988) #76

PSU 51-042C (1988) #77

PSU 51-042C (1988) #78

PSU 51-042C (1988) #79

PSU 51-042C (1988) #80

PSU 51-042C (1988) #81

PSU 51-042C (1988) #82

PSU 51-042C (1988) #83

PSU 51-042C (1988) #84

PSU 51-042C (1988) #85

PSU 51-042C (1988) #86

PSU 51-042C (1988) #87

PSU 51-042C (1988) #88

PSU 51-042C (1988) #89

PSU 51-042C (1988) #90

PSU 51-042C (1988) #91

PSU 51-042C (1988) #92

PSU 51-042C (1988) #93

PSU 51-042C (1988) #94

PSU 51-042C (1988) #95

PSU 51-042C (1988) #96

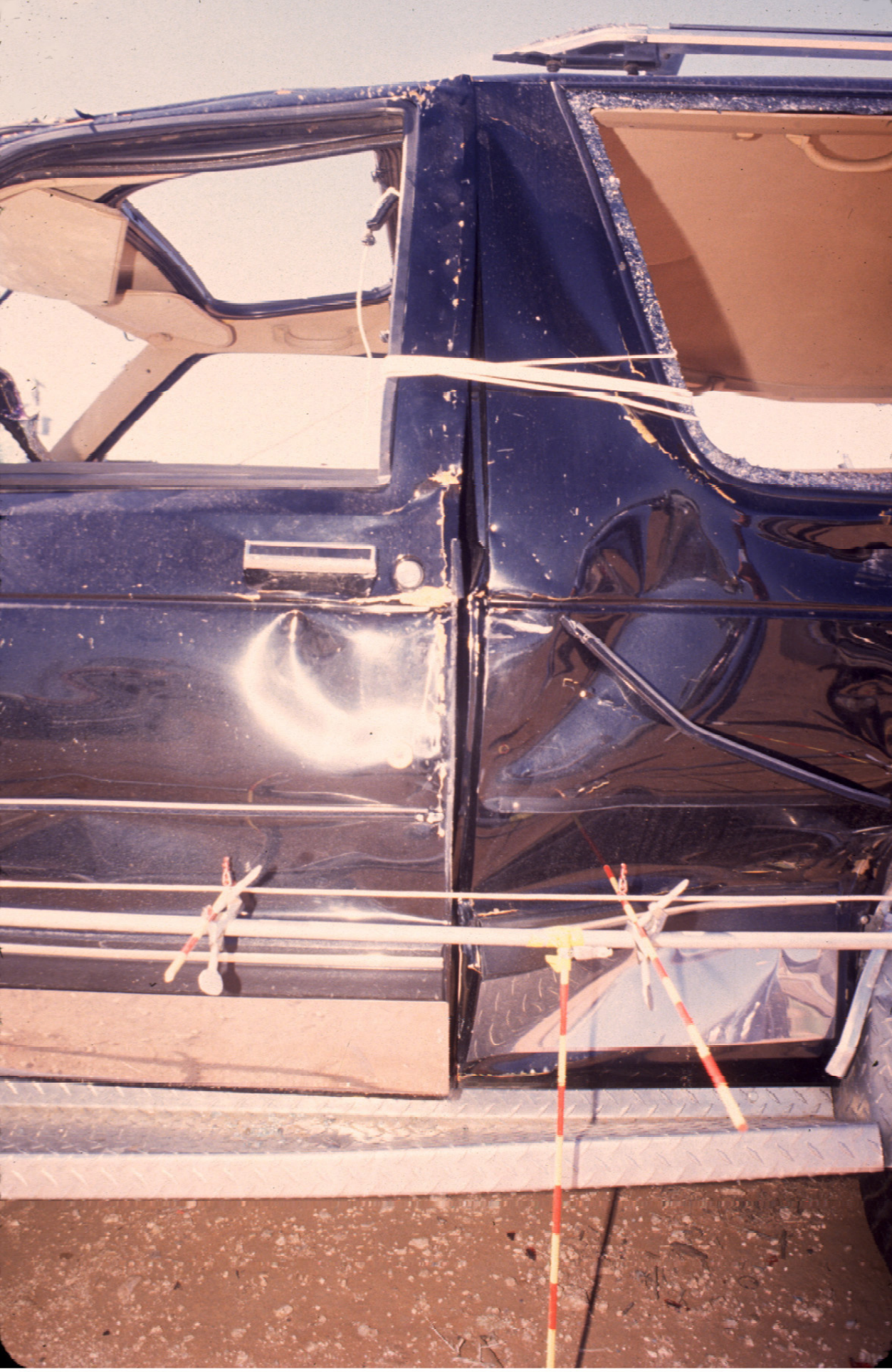

PSU 51-042C (1988) #97

PSU 51-042C (1988) #98

PSU 51-042C (1988) #99

PSU 51-042C (1988) #100

PSU 51-042C (1988) #101

PSU 51-042C #102

PSU 51-042C (1988) #103

PSU 51-042C (1988) #104

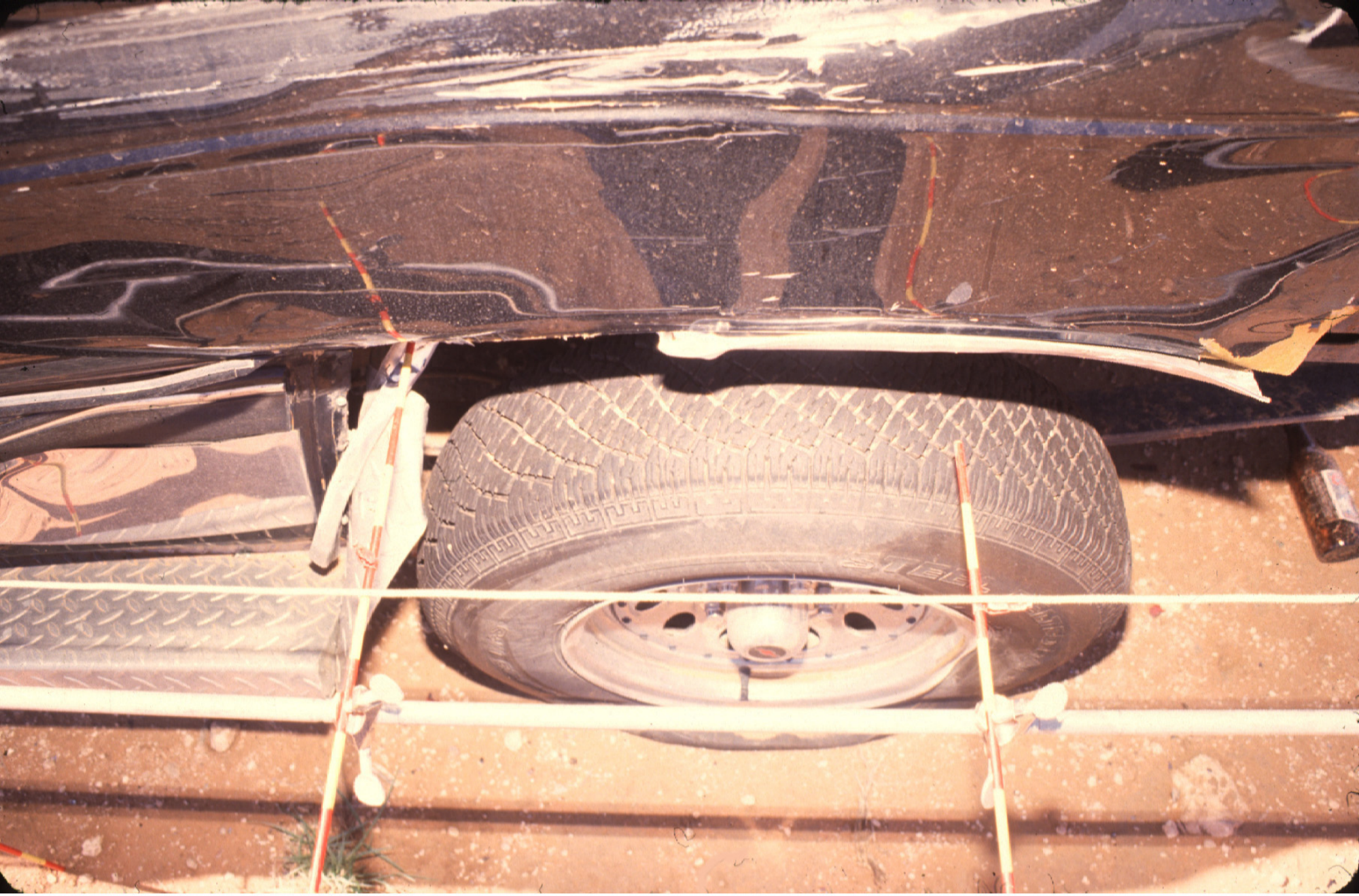

PSU 51-042C (1988) #105

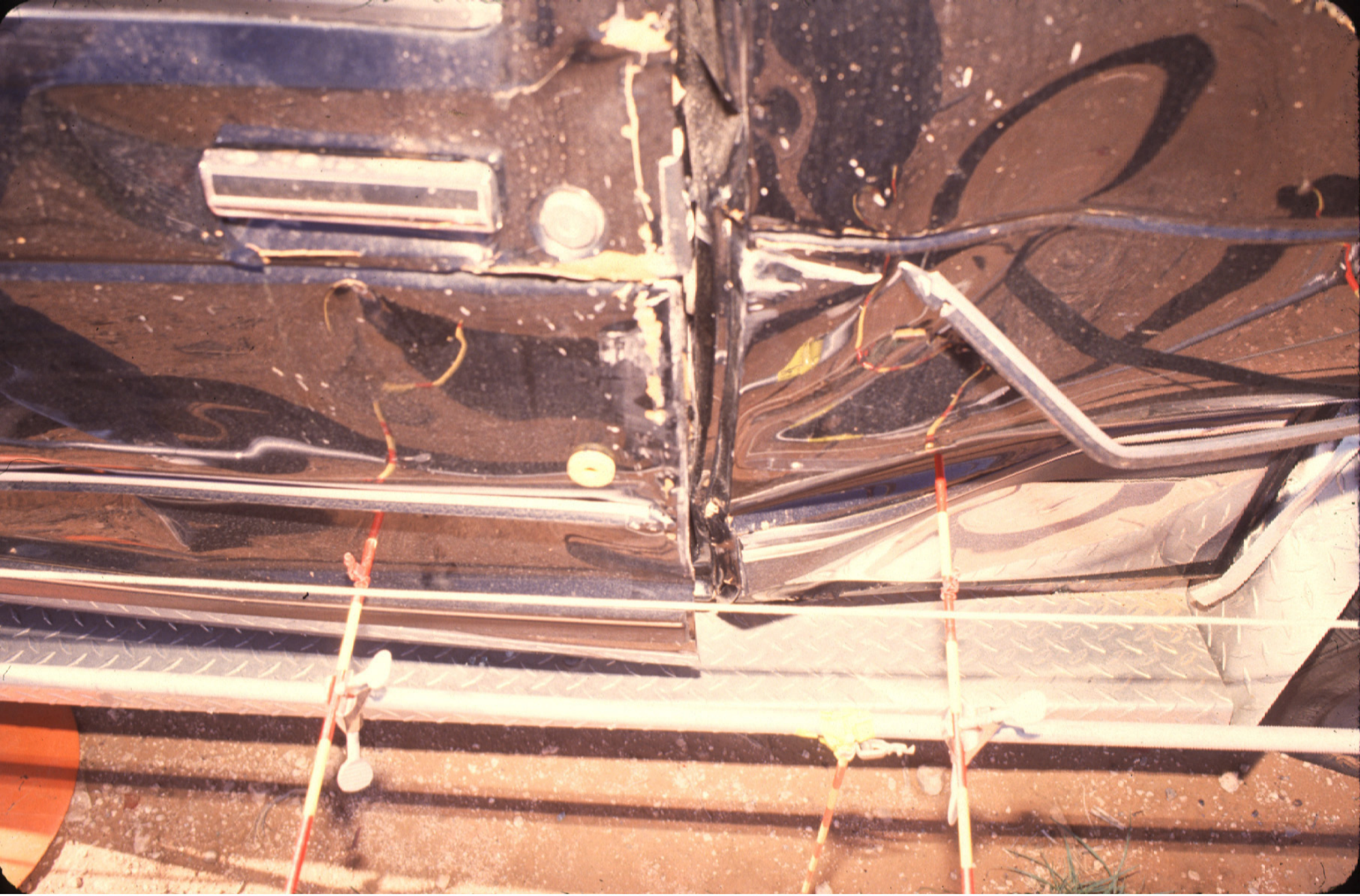

PSU 51-042C (1988) #106

PSU 51-042C (1988) #107

PSU 51-042C (1988) #108

PSU 51-042C (1988) #109

PSU 51-042C (1988) #110

PSU 51-042C (1988) #111

PSU 51-042C (1988) #112

PSU 51-042C (1988) #113

PSU 51-042C (1988) #114

PSU 51-042C (1988) #115

PSU 51-042C (1988) #116

PSU 51-042C (1988) #117

PSU 51-042C (1988) #118

PSU 51-042C (1988) #119

PSU 51-042C (1988) #120

PSU 51-042C (1988) #121

PSU 51-042C (1988) #122

PSU 51-042C (1988) #123

PSU 51-042C (1988) #124

PSU 51-042C (1988) #125

PSU 51-042C (1988) #126

PSU 51-042C (1988) #127

PSU 51-042C (1988) #128

PSU 51-042C (1988) #129

PSU 51-042C (1988) #130

PSU 51-042C (1988) #131

PSU 51-042C (1988) #132

PSU 51-042C (1988) #133

PSU 51-042C (1988) #134

PSU 51-042C (1988) #135

PSU 51-042C (1988) #136

PSU 51-042C (1988) #137

PSU 51-042C (1988) #138

PSU 51-042C (1988) #139
Best Available

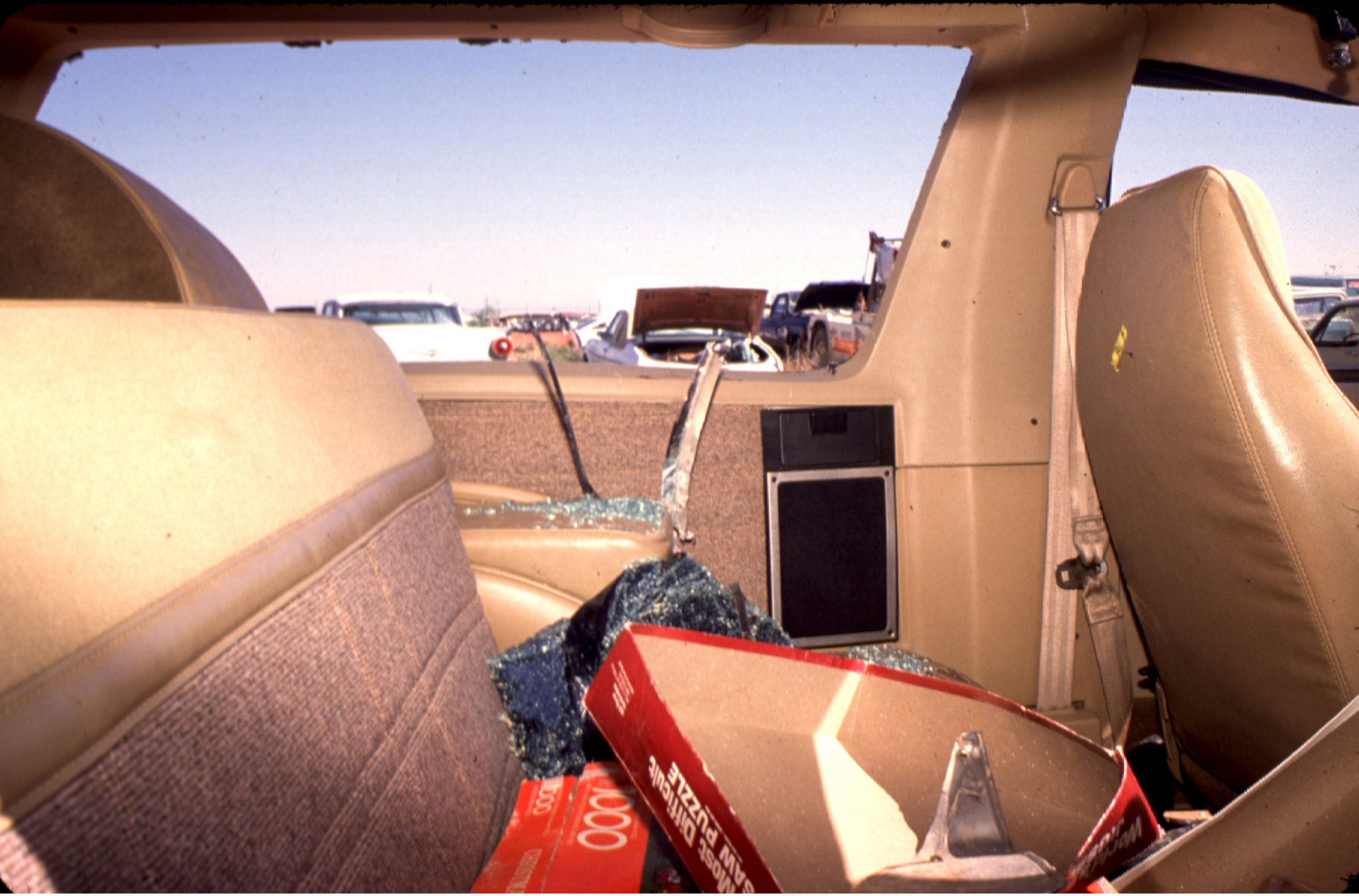

PSU 51-042C (1988) #140

PSU 51-042C (1988) #141
Best Available

PSU 51-042C(1988) #142
Best Available

PSU 51-042C (1988) #143
Best Available

PSU 51-042C (1988) #144
Best Available