U.S. Department
of Transportation

**National Highway
Traffic Safety
Administration**

400 Seventh Street, S.W.
Washington, D.C. 20590

Dear Crash Data Researchers/Users:

Thank you for choosing crash data from the National Highway Traffic Safety Administration (NHTSA) for your research or other use. The information contained in this motor vehicle crash report is collected, maintained and distributed in accordance with Public Law 89-564. In accordance with this Public Law, NHTSA is required not to release any case information until completion of quality control procedures. These procedures include a review of the case material to extract all names, licenses and registration numbers, non-coded interview material, non-research related researcher comments in the margins, non-factual data, and the production number portion of the vehicle identification number (VIN).

If you requested NHTSA to query its database files in order to identify a specific crash, then that query was made using non-personal descriptors you provided for use in our search. This motor vehicle crash may have been identified from a data search and matches the general, non-personal descriptors you provided, but we cannot confirm that this is the specific crash report you requested.

If you have any questions with regard to the above procedures, please contact the Field Operations Branch, Crash Investigation Division, National Center for Statistics and Analysis at 202-366-4820. Again, please be advised that we cannot confirm that this is the case that you have specifically requested nor can we certify the information to be correct.

*** *** ***

Get it together!
SAFETY BELTS SAVE LIVES

AUTO SAFETY HOTLINE
(800) 424-9393
Wash. D.C. Area 366-0123

U.S. Department of Transportation
National Highway Traffic Safety Administration

CASE SUMMARY

NATIONAL ACCIDENT SAMPLING SYSTEM
CRASHWORTHINESS DATA SYSTEM

PSU 71 CASE NO. 145B TYPE OF ACCIDENT Van / Off Road

A. DESCRIPTION OF THE ACCIDENT SEQUENCE AND ACCIDENT PECULIARITIES

(Provide a summary of the accident sequence as well as any particular event of the accident that is noteworthy. Injury mechanism and vehicle crashworthiness is the focus, not driver culpability. **Do not include any personal identifiers.** Use reverse side if needed.)

Vehicle 1 was traveling west on a 2-lane rural roadway going through a left hand curve when it exited the left side of the roadway. Vehicle 1 went up a roadside embankment, traveled approx. 40 ft. in the air and rolled 1/4 turn before coming to land on it's right side. Vehicle 1 came to rest facing west after rolling back on it's wheels. Conditions: Dry

B. VEHICLE PROFILE(S)

Vehicle No.	Class of Vehicle	Year/Make/Model	Most Severe Damage		Component Failure
			Damage Plane	Severity Description	
1	Van (other)	'81 Ford E-350	Front	Moderate	N/A

C. PERSON PROFILE(S)

Vehicle No.	Person Role	Seat Position	Restraint Use	Most Severe Injury			
				Body Region	Lesion	AIS	Injury Source
1	Driver	Fr.Lt.	None	Face	Laceration	1	Unknown

DO NOT SANITIZE THIS FORM

HS Form 434A
1/88

U.S. Department of Transportation
National Highway Traffic Safety Administration

NATIONAL ACCIDENT SAMPLING SYSTEM
CRASHWORTHINESS DATA SYSTEM

ACCIDENT COLLISION DIAGRAM

PSU No. 7 1

Case Number – Stratum 1 4 5 B

Indicate North

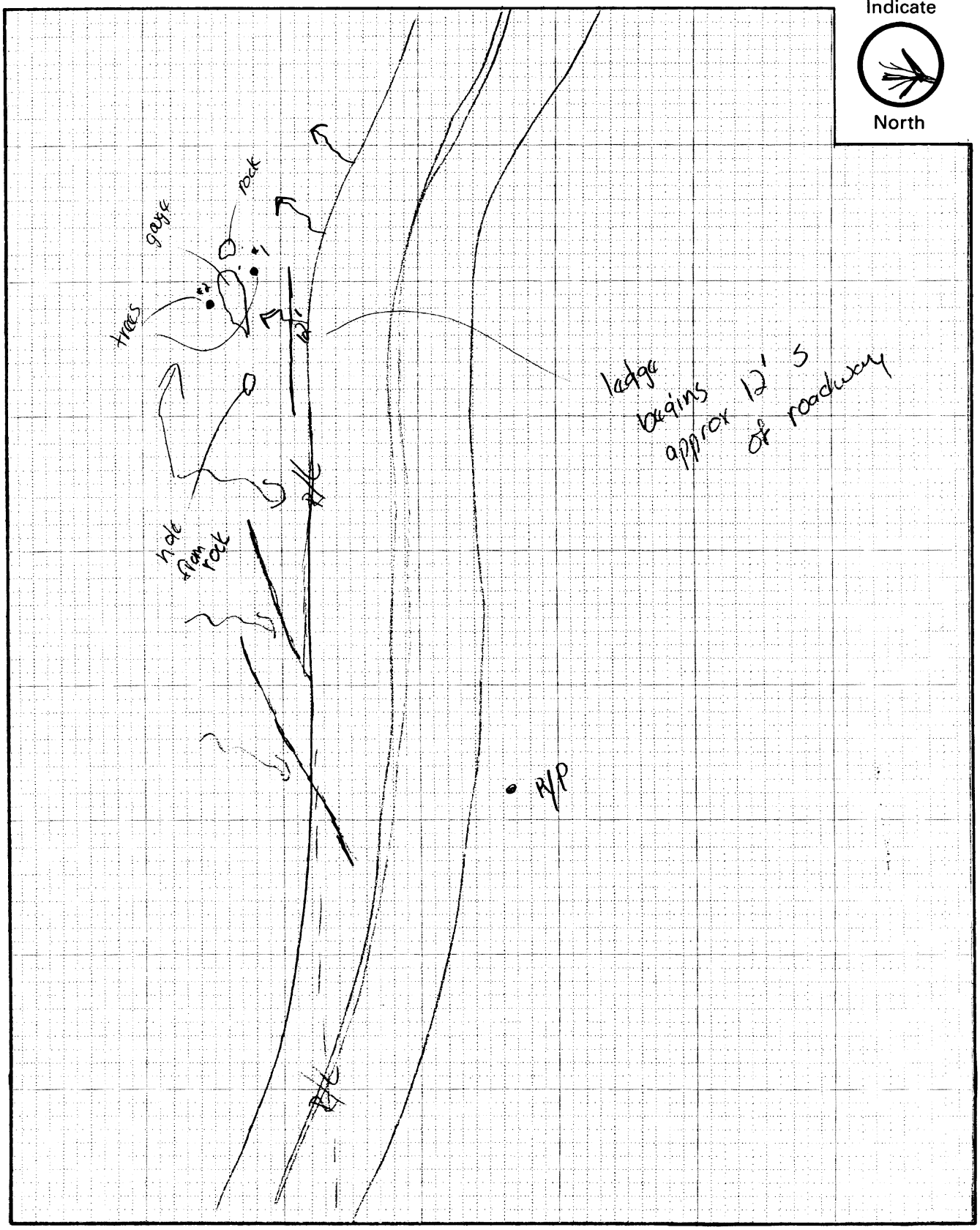

HS Form 431B
1/88

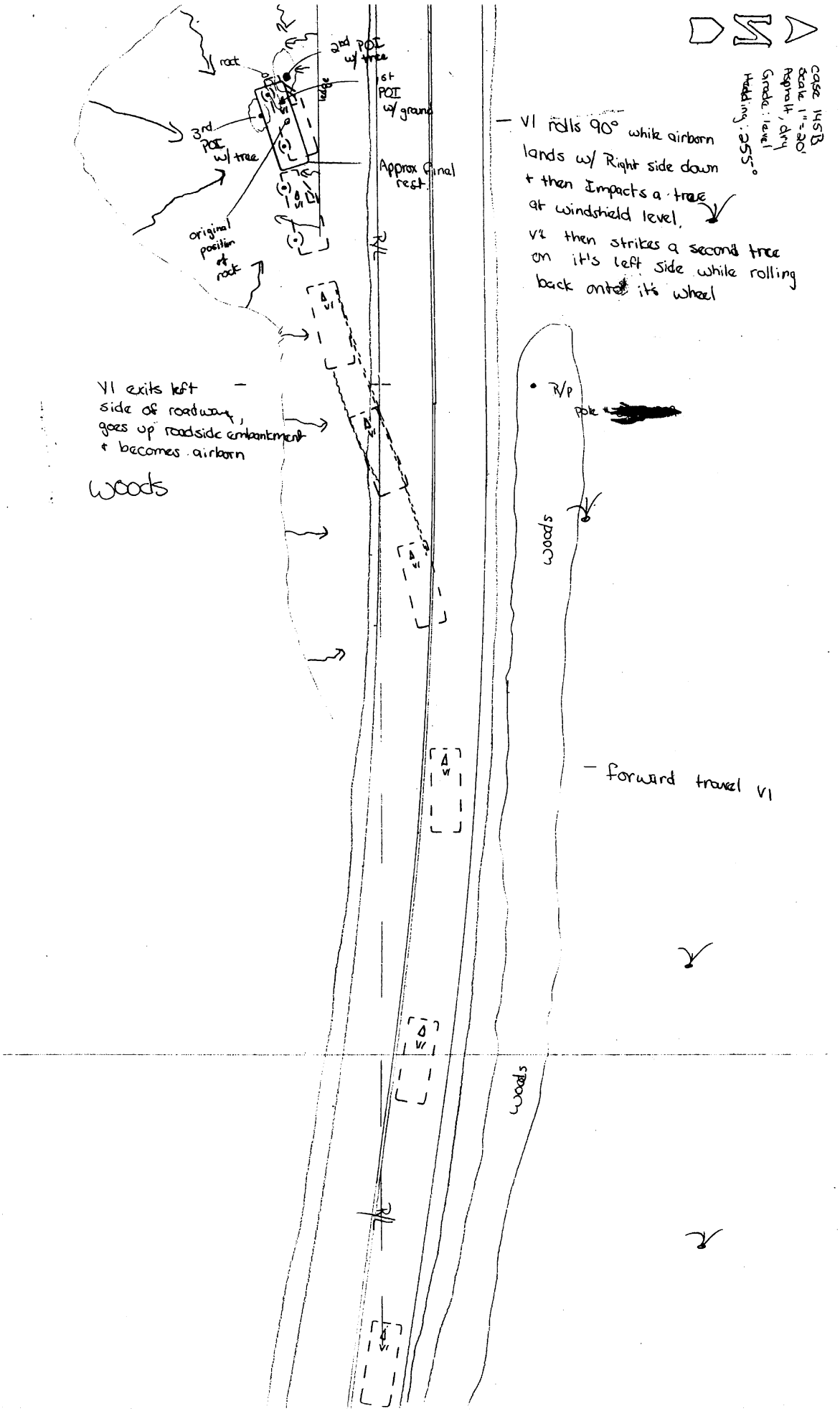

case 145B
Scale 1" = 20'
Asphalt, dry
Grade: level
Heading: 255°
rock
2nd POI w/ tree
1st POI w/ ground
ledge
3rd POI w/ tree
Approx final rest
original position of rock
V1 rolls 90° while airborn lands w/ Right side down + then Impacts a tree at windshield level.
V1 then strikes a second tree on it's left side while rolling back onto it's wheel
V1 exits left side of roadway, goes up roadside embankment + becomes airborn
woods
R/P
pole
woods
forward travel V1
woods

U.S. Department of Transportation
National Highway Traffic Safety Administration

ACCIDENT COLLISION MEASUREMENT TABLE

NATIONAL ACCIDENT SAMPLING SYSTEM
CRASHWORTHINESS DATA SYSTEM

Primary Sampling Unit Number 21 Case Number–Stratum 1 4 5 B

ACCIDENT COLLISION DIAGRAM

LEVEL I
PHYSICAL EVIDENCE ABSENT

To be accomplished when there is no physical evidence present at the scene:

*approximate vehicle orientation at impact and final rest

*applicable road/roadway delineation (e.g., curbs/edge lines, lane markings, median markings, pavement markings, etc.)

*applicable traffic controls (e.g., speed limit)

*north arrow placed on diagram

*sketch required

LEVEL II
PHYSICAL EVIDENCE PRESENT

In addition to the Level I tasks noted above, the following must be

LEVEL II (Cont'd)

accomplished when physical evidence is present:

*document reference point and reference line relative to physical features present at the scene

*scaled documentation of all accident induced physical evidence

*scaled documentation of all roadside objects contacted

*roadway surface type and condition of applicable roadways

*grade measurements for all applicable roadways

*scaled representations of the vehicle(s) at pre-impact, impact, and final rest based upon either:

a) physical evidence, or

b) reconstructed accident dynamics

CRASH DATA

	VEH. #1	VEH. #2	VEH. #3
Heading Angle	245		
Surface Type	asphalt		
Surface Condition	dry		
Grade Measurement (v/h)	level		

Reference Point: pole # [redacted]

Reference Line: South roadedge of [redacted]

Road 22.0

Item	Distance and Direction from Reference Point	Distance and Direction from Reference Line
R/P pole # [redacted]	00	31.3 N
RF leaves roadway	5.3 E	00
mid LF	5.3 E	7.0 S
Begin LF	19.4 E	0.7 S
Begin RF	35.0 E	9.2 N
End LF	2.6 W	9'3" S
End RF	19.2 W	8'7" S
original position of rock	54.8	18'0" S
tree # 2	55.8	23'10" S
gouge begins	57.4	19'3" S
" end	63.2	22'6" S
1st tree	63.8 W	18'10" S

HS Form 431A
1/88

Item	Distance and Direction from Reference Point	Distance and Direction from Reference Line
rock	63.8 W	22' 7" S
road curve		
curve tangent	4.2 E	00
50'	50	1.1 S
100'	100	4.0 S
150'	150	10.0 S
200'	200	17.7 S

U.S. Department of Transportation
National Highway Traffic Safety Administration

EXTERIOR VEHICLE FORM

NATIONAL ACCIDENT SAMPLING SYSTEM
CRASHWORTHINESS DATA SYSTEM

1. Primary Sampling Unit Number 71	3. Vehicle Number 2/79.8 (38.9) 01
2. Case Number—Stratum 145B	

VEHICLE IDENTIFICATION

VIN 1FTHE34G8BH[redacted] Model Year 1981

Vehicle Make (specify): Ford Vehicle Model (specify): E-350 Van

LOCATOR

Locate the end of the damage with respect to the vehicle longitudinal center line or bumper corner for end impacts or an undamaged axle for side impacts.

Specific Impact No.	Location of Direct Damage	Location of Field L
01	Ends at RF corner	Whole Front
03	Begins 100" forward of LR axle	Begins 83" forward of LR axle
02	whole front	

CRUSH PROFILE

NOTES: Identify the plane at which the C-measurements are taken (e.g., at bumper, above bumper, at sill, above sill, etc.) and label adjustments (e.g., free space).

Measure and document on the vehicle diagram the location of maximum crush.

Measure C1 to C6 from driver to passenger side in front or rear impacts and rear to front in side impacts.

Free space value is defined as the distance between the baseline and the original body contour taken at the individual C locations. This may include the following: bumper lead, bumper taper, side protrusion, side taper, etc. Record the value for each C-measurement and maximum crush.

62
62
124

Use as many lines/columns as necessary to describe each damage profile.

induced out

Specific Impact Number	Plane of C-Measurements	Direct Damage Width (CDC)	Direct Damage Max Crush	Field L	C_1	C_2	C_3	C_4	C_5	C_6	±D
01	bumper	11	18.5	62	2.2	0.5	0	0	1.8	20.5	0
			(C6)		2.0	1.0	0	0	1.0	2.0	
					0.2	0	0	0	0.8	18.5	
03	Left side	18"	1.75								
			0.75	40"	0.75	1.0	1.25	1.75	1.5	0.75	
		(4" rear of C2)	1.0		0.75	0.75	0.75	0.75	0.75	0.75	
					0	0.25	0.5	1.0	0.75	0	
01	R side	200	~~2 6"~~	200							
02	tree large	68	77"	6							

HS Form 435A
1/88

VEHICLE DAMAGE SKETCH

TIRE—WHEEL DAMAGE

a. Rotation physically restricted		b. Tire deflated	
RF	tire	RF	2
LF	2 off	LF	2
RR	2	RR	2
LR	2	LR	2

(1) Yes (2) No (8) NA (9) Unk.

TYPE OF TRANSMISSION

☐ Manual ☒ Automatic

ORIGINAL SPECIFICATIONS

Wheelbase	138
Overall Length	206.8
Maximum Width	79.8
Curb Weight Gas truck	4379
Average Track 98 Index	65
Front Overhang	25
Rear Overhang	43.8
Engine Size: cyl./ displ.	V8 / 6.6 L
Undeformed End Width	75

WHEEL STEER ANGLES
(For locked front wheels or displaced rear axles only)

RF ± 00 °
LF ± 00 °
RR ± 00 °
LR ± 00 °
Within ±5 degrees

DRIVE WHEELS

☐ FWD ☒ RWD ☐ 4WD

Approximate Cargo Weight wood 3 sheets 100

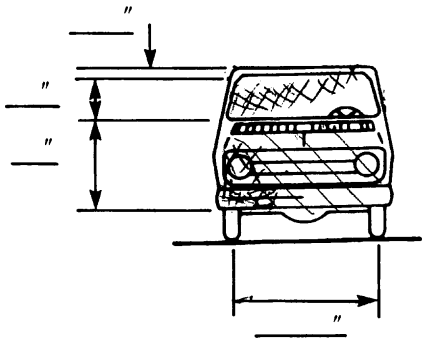

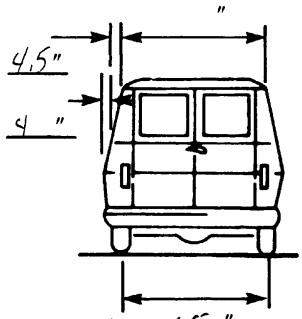

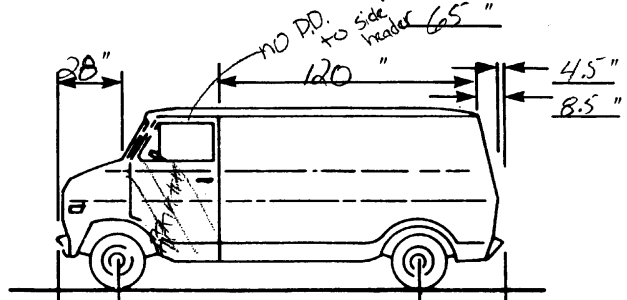

POST-CRASH

Bumper corner 25 " 138 " 40 " Bumper corner

Stringline 27 " 42 " Stringline

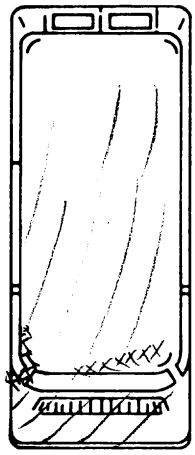

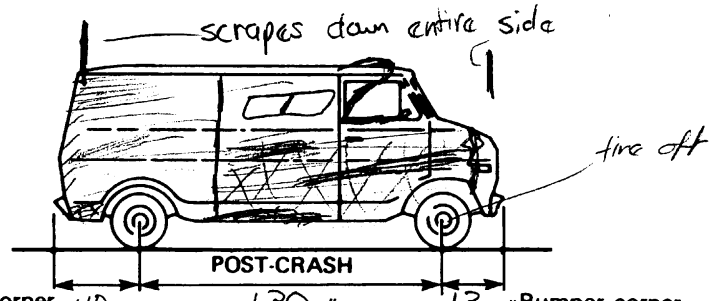

POST-CRASH

Bumper corner 40 " 130 " 13 " Bumper corner

Stringline 42 " 35 " Stringline

NOTES: Sketch new perimeter and cross hatch direct damage and single hatch induced damage on all views. Annotate observations which might be useful in reconstructing the accident (e.g., grass in tire bead, direction of striations, scuff on sidewall, etc.). If pulling trailer, sketch type of trailer and damage received on the back of this page.
Annotate any damage caused by extrication such as component removal by torching, prying, or hydraulic shears.

CDC WORKSHEET

CODES FOR OBJECT CONTACTED

01-30—Vehicle Number

Noncollision
- (31) Overturn—rollover
- (32) Fire or explosion
- (33) Jackknife
- (34) Other intraunit damage (specify): _____
- (35) Noncollision injury
- (38) Other noncollision (specify): _____
- (39) Noncollision—details unknown

Collision with Fixed Object
- (41) Tree (≤4 inches in diameter)
- (42) Tree (>4 inches in diameter)
- (43) Shrubbery or bush
- (44) Embankment
- (45) Breakaway pole or post (any diameter)

Nonbreakaway Pole or Post
- (50) Pole or post (≤4 inches in diameter)
- (51) Pole or post (>4 but ≤12 inches in diameter)
- (52) Pole or post (>12 inches in diameter)
- (53) Pole or post (diameter unknown)
- (54) Concrete traffic barrier
- (55) Impact attenuator
- (56) Other traffic barrier (specify): _____
- (57) Fence
- (58) Wall
- (59) Building
- (60) Ditch or Culvert
- (61) Ground
- (62) Fire hydrant
- (63) Curb
- (64) Bridge
- (68) Other fixed object (specify): _____
- (69) Unknown fixed object

Collision With Nonfixed Object
- (71) Motor vehicle not in transport
- (72) Pedestrian
- (73) Cyclist or cycle
- (74) Other nonmotorist or conveyance (specify): _____
- (75) Vehicle occupant
- (76) Animal
- (77) Train
- (78) Trailer, disconnected in transport
- (88) Other nonfixed object (specify): _____
- (89) Unknown nonfixed object
- (98) Other event (specify): _____
- (99) Unknown event or object

DEFORMATION CLASSIFICATION BY EVENT NUMBER

Accident Event Sequence Number	Object Contacted	(1) (2) Direction of Force (degrees)	Incremental Value of Shift	(3) Deformation Location	(4) Specific Longitudinal or Lateral Location	(5) Specific Vertical or Lateral Location	(6) Type of Damage Distribution	(7) Deformation Extent
01	31	000	00	F	R	A	0	09
02	42	000	00	F	D	G	0	09
03	42	000	00	L	P	E	W	01

U.S. Department of Transportation
National Highway Traffic Safety Administration

INTERIOR VEHICLE FORM

NATIONAL ACCIDENT SAMPLING SYSTEM
CRASHWORTHINESS DATA SYSTEM

form P

1. Primary Sampling Unit Number 71
2. Case Number—Stratum 145B
3. Vehicle Number 01

INTEGRITY

4. Passenger Compartment Integrity 98

(00) No integrity loss

Yes, Integrity Was Lost Through
(01) Windshield
(02) Door (side)
(03) Door/hatch (rear)
(04) Roof
(05) Roof glass
(06) Side window
(07) Rear window
(08) Roof and roof glass
(09) Windshield and door (side)
(10) Windshield and roof
(11) Side and rear window
(98) Other combination of above (specify): windshield, R + L door glass
(99) Unknown

Door, Tailgate Or Hatch Opening sliding door

5. LF 1 6. RF 3 7. LR 0 8. RR 3 9. TG/H 3

not apparently jammed but wouldn't open

(0) No door/gate/hatch
(1) Door/gate/hatch remained closed and operational
(2) Door/gate/hatch came open during collision
(3) Door/gate/hatch jammed shut
(8) Other (specify):
(9) Unknown

Damage/Failure Associated with Door, Tailgate or Hatch Opening in Collision. If IV05-IV09 ≠ 2, Then Code 0.

10. LF 0 11. RF 0 12. LR 0 13. RR 0 14. TG/H 0

(0) No door/gate/hatch or door not opened

Door, Tailgate, or Hatch Came Open During Collision
(1) Door operational (no damage)
(2) Latch/striker failure due to damage
(3) Hinge failure due to damage
(4) Door structure failure due to damage
(5) Door support (i.e., pillar, sill, roof side rail, etc.) failure due to damage
(6) Latch/striker and hinge failure due to damage
(8) Other failure (specify):
(9) Unknown

GLAZING

Glazing Damage from Impact Forces

15. WS 2 16. LF 6 17. RF 6 18. LR 8 19. RR 0
20. BL 0 21. Roof 8 22. Other 6 — R front wing

(0) No glazing damage from impact forces
(2) Glazing in place and cracked from impact forces
(3) Glazing in place and holed from impact forces
(4) Glazing out-of-place (cracked or not) and not holed from impact forces
(5) Glazing out-of-place and holed from impact forces
(6) Glazing disintegrated from impact forces
(7) Glazing removed prior to accident
(8) No glazing
(9) Unknown if damaged

Glazing Damage from Occupant Contact

23. WS 0 24. LF 0 25. RF 0 26. LR 0 27. RR 0
28. BL 0 29. Roof 0 30. Other 0

(0) No occupant contact to glazing or no glazing
(1) Glazing contacted by occupant but no glazing damage
(2) Glazing in place and cracked by occupant contact
(3) Glazing in place and holed by occupant contact
(4) Glazing out-of-place (cracked or not) by occupant contact and not holed by occupant contact
(5) Glazing out-of-place by occupant contact and holed by occupant contact
(6) Glazing disintegrated by occupant contact
(9) Unknown if contacted by occupant

If No Glazing Damage ***And*** No Occupant Contact or No Glazing, Then Code IV 31 Through IV 46 As 0

Type of Window/Windshield Glazing

31. WS 1 32. LF 2 33. RF 2 34. LR 0 35. RR 0
36. BL 0 37. Roof 0 38. Other 2

(0) No glazing contact and no damage, or no glazing
(1) AS-1 — Laminated
(2) AS-2 — Tempered
(3) AS-3 — Tempered-tinted
(4) AS-14 — Glass/Plastic
(8) Other (specify):
(9) Unknown

Window Precrash Glazing Status

39. WS 1 40. LF 2 41. RF 2 42. LR 0 43. RR 0
44. BL 0 45. Roof 0 46. Other 2

(0) No glazing contact and no damage, or no glazing
(1) Fixed
(2) Closed
(3) Partially opened
(4) Fully opened
(9) Unknown

INTRUSION WORK SHEET

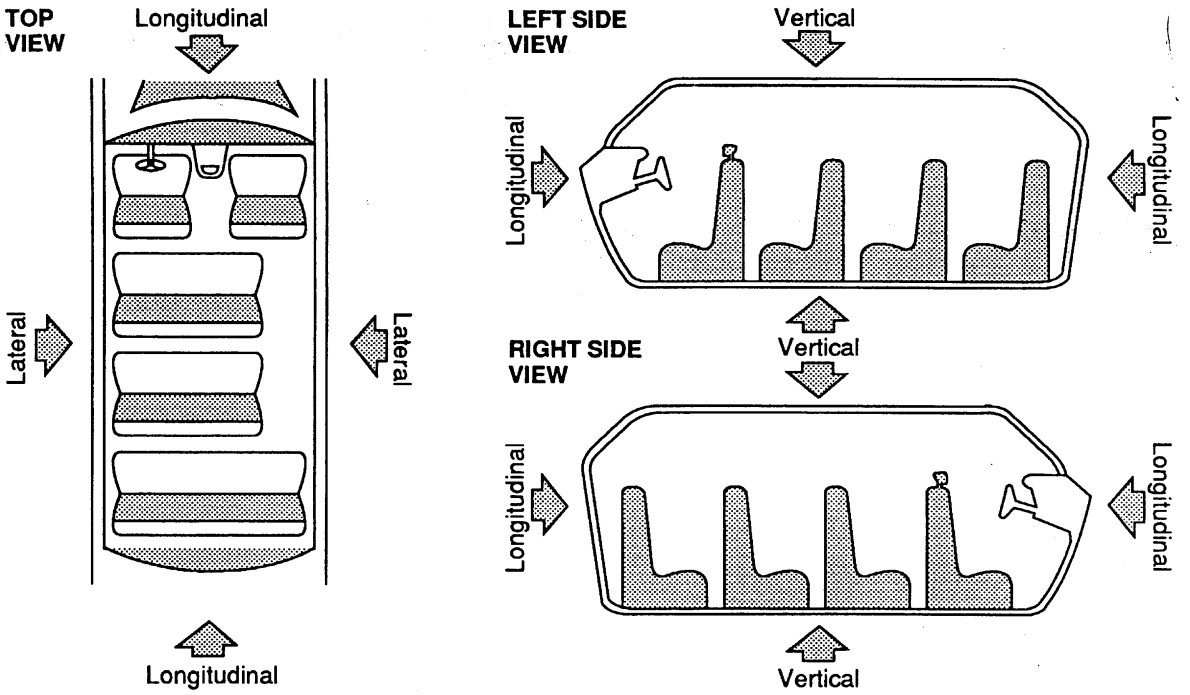

INTRUDED COMPONENT	LOCATION OF INTRUSION	DOMINANT CRUSH DIRECTION	COMPARISON VALUE	–	INTRUDED VALUE	=	INTRUSION	
Dash	11	long	30.5	–	30.5	=	0	to B
"	12	"	30.5	–	30.5	=	0	"
"	13	"	30.5	–	28.5	=	2.0	"
header	11	"	22	–	10	=	12.0	3 "
	12	"	24	–	6	=	18.0	2
	13	"	22	–	11	=	11.0	4
A-pillar top	11	"	23	–	19	=	4.0	8
base	13	"	33	–	2" * (rearward of A-pillar)	=	35.0	1
(R) door	13	lat	35.5	–	28 *	=	7.5	6
Floor	13	vert		–		=	≈ 2"	
toe pan	13	lat	40	–	38	=	2"	
kick panel	13	lat	34	–	27	=	7.0	7
roof	11	vert	54	–	46	=	8.0	5
"	12	"	54	–	50	=	4.0	9
"	13	"	54	–	50	=	4.0	10

OCCUPANT AREA INTRUSION

Note: If no intrusions, leave variables IV 47-IV 86 blank.

	Location of Intrusion	Intruding Component	Magnitude of Intrusion	Dominant Crush Direction
1st	47. 13	48. 06	49. 6	50. 2
2nd	51. 12	52. 15	53. 5	54. 2
3rd	55. 11	56. 15	57. 4	58. 2
4th	59. 13	60. 15	61. 3	62. 2
5th	63. 11	64. 12	65. 3	66. 1
6th	67. 13	68. 10	69. 3	70. 3
7th	71. 13	72. 11	73. 3	74. 3
8th	75. 11	76. 06	77. 2	78. 2
9th	79. 12	80. 12	81. 2	82. 1
10th	83. 13	84. 12	85. 2	86. 1

LOCATION OF INTRUSION

Front Seat
- (11) Left
- (12) Middle
- (13) Right

Second Seat
- (21) Left
- (22) Middle
- (23) Right

Third Seat
- (31) Left
- (32) Middle
- (33) Right

Fourth Seat
- (41) Left
- (42) Middle
- (43) Right

(98) Other enclosed area (specify): _____

(99) Unknown

INTRUDING COMPONENT

Interior Components
- (01) Steering assembly
- (02) Instrument panel left
- (03) Instrument panel center
- (04) Instrument panel right
- (05) Toe pan
- (06) A-pillar
- (07) B-pillar
- (08) C-pillar
- (09) D-pillar
- (10) Door panel
- (11) Side panel/kickpanel
- (12) Roof (or convertible top)
- (13) Roof side rail
- (14) Windshield
- (15) Windshield header
- (16) Window frame
- (17) Floor pan
- (18) Backlight header
- (19) Front seat back
- (20) Second seat back
- (21) Third seat back
- (22) Fourth seat back
- (23) Fifth seat back
- (24) Seat cushion
- (25) Back panel or door surface
- (26) Other interior component (specify): _____

Exterior Components
- (30) Hood
- (31) Outside surface of vehicle (specify): _____
- (32) Other exterior object in the environment (specify): _____
- (33) Unknown exterior object

(98) Intrusion of unlisted component(s) (specify): _____

(99) Unknown

MAGNITUDE OF INTRUSION

- (1) ≥ 1 inch but < 3 inches
- (2) ≥ 3 inches but < 6 inches
- (3) ≥ 6 inches but < 12 inches
- (4) ≥ 12 inches but < 18 inches
- (5) ≥ 18 inches but < 24 inches
- (6) ≥ 24 inches
- (9) Unknown

DOMINANT CRUSH DIRECTION

- (1) Vertical
- (2) Longitudinal
- (3) Lateral
- (9) Unknown

STEERING COLUMN WORKING DIAGRAMS

STEERING COLUMN COLLAPSE

Steering Column Shear Module Movement

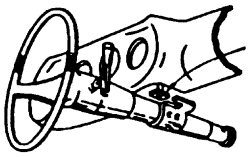

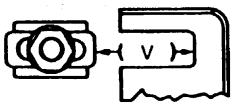

Left ____

Right ____ V = _____"

Direction and Magnitude of Steering Column Movement

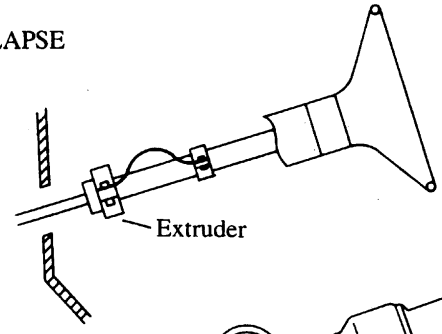

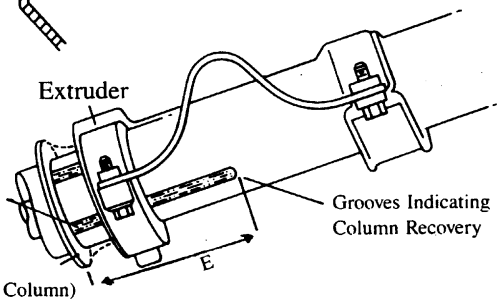

Extruder Retainer (Mini Column) or Flared Tube (Mod Column)

E=____

STEERING COLUMN MOVEMENT

Vertical Movement

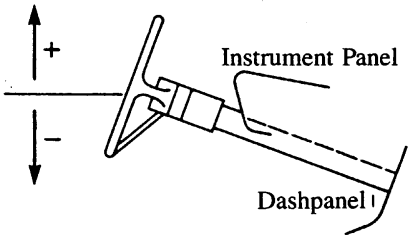

Lateral Movement

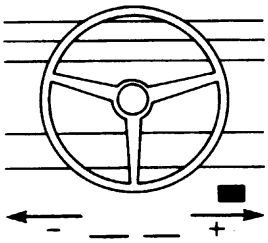

Longitudinal Movement

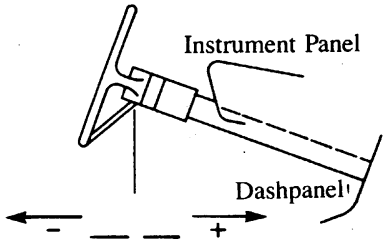

	COMPARISON VALUE	–	DAMAGED VALUE	=	MOVEMENT
VERTICAL		–	31	=	
LATERAL		–	15	=	
LONGITUDINAL		–	21.5	=	

to floor

to © door

to B-pillar

STEERING RIM/SPOKE DEFORMATION

COMPARISON VALUE	–	DAMAGED VALUE	=	DEFORMATION
	–		=	0
	–		=	

STEERING COLUMN

87. Steering Column Type 1

(1) Fixed column
(2) Tilt column
(3) Telescoping column
(4) Tilt and telescoping column
(8) Other column type (specify): _____
(9) Unknown

88. Steering Column Collapse Due to Occupant Loading 98

_____ Code actual measured movement to the nearest inch. See coding manual for measurement technique(s).

(00) No movement, compression, or collapse
(01-49) Actual measured value
(50) 50 inches or greater

Estimated movement from observation
(81) Less than 1 inch
(82) ≥ 1 inch but < 2 inches
(83) ≥ 2 inches but < 4 inches
(84) ≥ 4 inches but < 6 inches
(85) ≥ 6 inches but < 8 inches
(86) Greater than or equal to 8 inches

(97) Apparent movement, value undetermined or cannot be measured or estimated
(98) Nonspecified type column
(99) Unknown

Direction And Magnitude of Steering Column Movement

89. Vertical Movement ⊖ 00

90. Lateral Movement ⊕ 00

91. Longitudinal Movement ⊕ 00

Code the actual measured movement to the nearest inch. See Coding Manual for measurement technique(s)
(+00) No Steering column movement
(±01 – ±49) Actual measured value
(±50) 50 inches or greater

Estimated movement from observation
(±81) ≥ 1 inch but < 3 inches
(±82) ≥ 3 inches but < 6 inches
(±83) ≥ 6 inches but < 12 inches
(±84) ≥ 12 inches

(__97) Apparent movement > 1 inch but cannot be measured or estimated
(__99) Unknown

92. Steering Rim/Spoke Deformation 0

_____ Code actual measured deformation to the nearest inch.

(0) No steering rim deformation
(1-5) Actual measured value
(6) 6 inches or more
(8) Observed deformation cannot be measured
(9) Unknown

93. Location of Steering Rim/Spoke Deformation 00

(00) No steering rim deformation

Quarter Sections
(01) Section A
(02) Section B
(03) Section C
(04) Section D

Half Sections
(05) Upper half of rim/spoke
(06) Lower half of rim/spoke
(07) Left half of rim/spoke
(08) Right half of rim/spoke

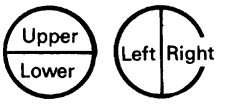

(09) Complete steering wheel collapse
(10) Undetermined location
(99) Unknown

INSTRUMENT PANEL

94. Odometer Reading 107,000

107062 miles—Code mileage to the nearest 1,000 miles

(000) No odometer
(001) Less than 1,500 miles
(300) 299,500 miles or more
(999) Unknown

? 00000

Source: [redacted]

95. Instrument Panel Damage from Occupant Contact 1

(0) No
(1) Yes
(9) Unknown

probable contact though dash has been severly damaged

96. Knee Bolsters Deformed from Occupant Contact 8

(0) No
(1) Yes
(8) Not present
(9) Unknown

97. Did Glove Compartment Door Open During Collision(s) 8

(0) No
(1) Yes
(8) Not present
(9) Unknown

VEHICLE INTERIOR SKETCHES

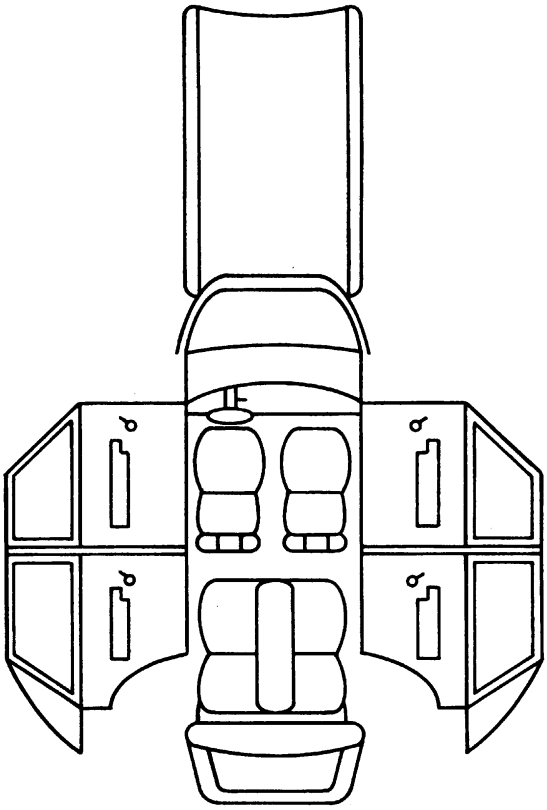

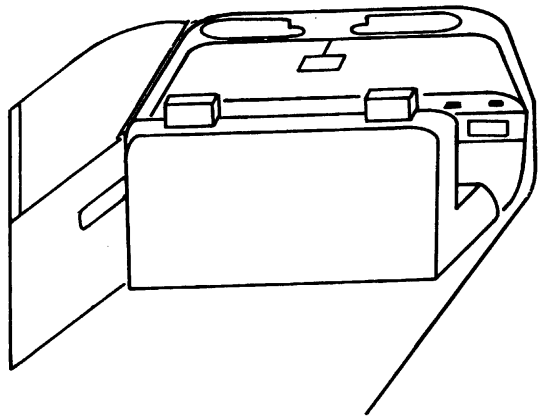

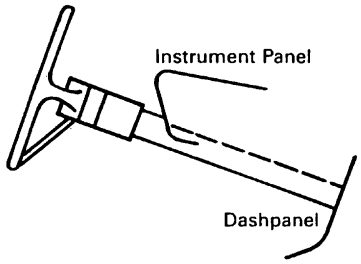

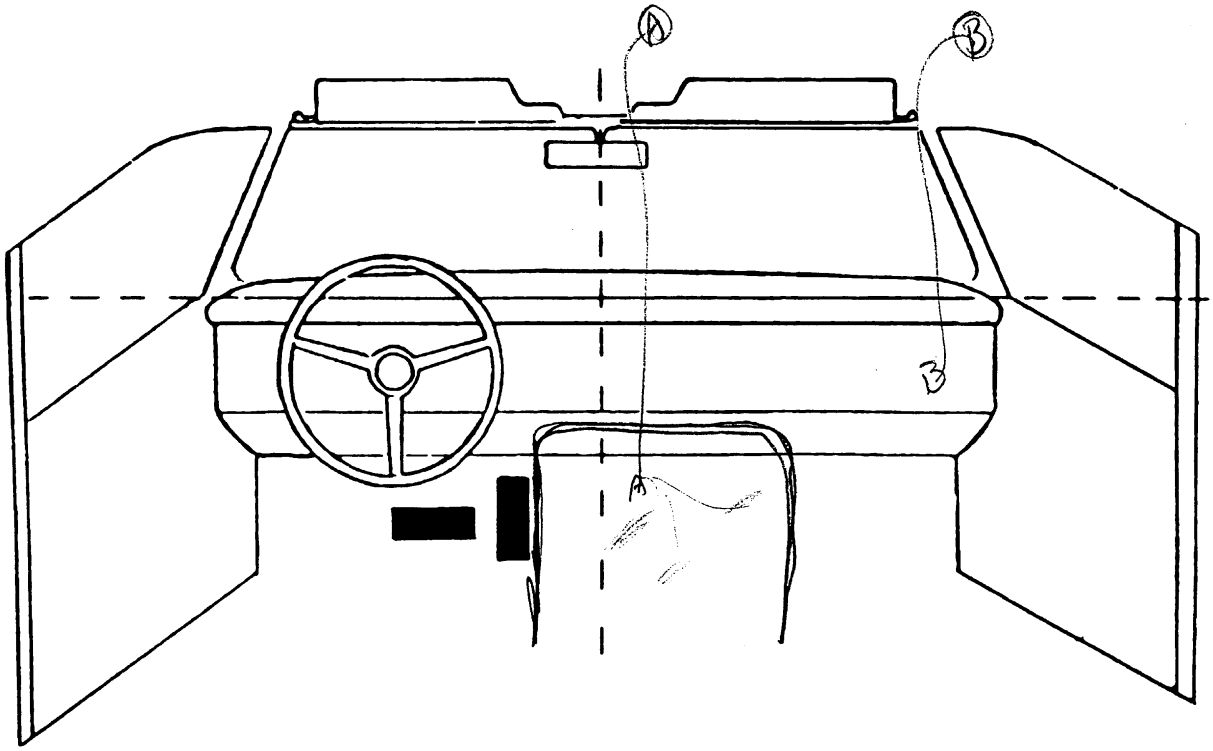

POINTS OF OCCUPANT CONTACT

Contact	Interior Component Contacted	Occupant No. If Known	Body Region If Known	Supporting Physical Evidence	Confidence Level of Contact Point
A	10	01	legs	scuffs scrapes	02
B	11	01	head	cracked	03
C					
D					
E					
F					
G					
H					
I					
J					
K					
L					
M					
N					

CODES FOR INTERIOR COMPONENTS

FRONT
- (01) Windshield
- (02) Mirror
- (03) Sunvisor
- (04) Steering wheel rim
- (05) Steering wheel hub/spoke
- (06) Steering wheel (combination of codes 04 and 05)
- (07) Steering column, transmission selector lever, other attachment
- (08) Add on equipment (e.g., CB, tape deck, air conditioner)
- (09) Left instrument panel and below
- (10) Center instrument panel and below
- (11) Right instrument panel and below
- (12) Glove compartment door
- (13) Knee bolster
- (14) Windshield including one or more of the following: front header, A-pillar, instrument panel, mirror,or steering assembly (driver side only)
- (15) Windshield including one or more of the following: front header, A-pillar, instrument panel, or mirror (passenger side only)
- (16) Other front object (specify): _____

LEFT SIDE
- (20) Left side interior surface, excluding hardware or armrests
- (21) Left side hardware or armrest
- (22) Left A pillar
- (23) Left B pillar
- (24) Other left pillar (specify): _____
- (25) Left side window glass or frame
- (26) Left side window glass including one or more of the following: frame, window sill, A-pillar, B-pillar, or roof side rail
- (27) Other left side object (specify): _____

RIGHT SIDE
- (30) Right side interior surface, excluding hardware or armrests
- (31) Right side hardware or armrest
- (32) Right A pillar
- (33) Right B pillar
- (34) Other right pillar (specify): _____
- (35) Right side window glass or frame
- (36) Right side window glass including one or more of the following: frame, window sill, A-pillar, B-pillar, or roof side rail
- (37) Other right side object (specify): _____

INTERIOR
- (40) Seat, back support
- (41) Belt restraint webbing/buckle
- (42) Belt restraint B-pillar attachment point
- (43) Other restraint system component (specify): _____
- (44) Head restraint system
- (45) Air cushion
- (46) Other occupants (specify): _____
- (47) Interior loose objects
- (48) Child safety seat (specify): _____
- (49) Other interior object (specify): _____

ROOF
- (50) Front header
- (51) Rear header
- (52) Roof left side rail
- (53) Roof right side rail
- (54) Roof or convertible top

FLOOR
- (56) Floor including toe pan
- (57) Floor or console mounted transmission lever, including console
- (58) Parking brake handle
- (59) Foot controls including parking brake

REAR
- (60) Backlight (rear window)
- (61) Backlight storage rack, door, etc.
- (62) Other rear object (specify): _____

CONFIDENCE LEVEL OF CONTACT POINT
- (1) Certain
- (2) Probable
- (3) Possible
- (4) Unknown

AUTOMATIC RESTRAINTS

NOTES: Encode the data for each applicable front seat position. The attributes for the variables may be found below. Restraint systems should be assessed during the vehicle inspection then coded on the Occupant Assessment Form.

		Left	Center	Right
FIRST	Availability	0	0	0
	Function	0	0	0
	Failure	0	0	0

Automatic (Passive) Restraint System Availability

(0) Not equipped/not available
(1) Airbag
(2) Airbag disconnected (specify):

_____

(3) Airbag not reinstalled
(4) 2 point automatic belts
(5) 3 point automatic belts
(6) Automatic belts destroyed or rendered inoperative
(9) Unknown

Automatic (Passive) Restraint Function

(0) Not equipped/not available

Automatic Belt
(1) Automatic belt in use
(2) Automatic belt not in use
(3) Automatic belt use unknown

Air Bag
(4) Airbag deployed during accident
(5) Airbag deployed inadvertently just prior to accident
(6) Deployed, accident sequence undetermined
(7) Nondeployed
(8) Unknown if deployed
(9) Unknown

Did Automatic (Passive) Restraint Fail

(0) Not equipped/not available
(1) No
(2) Yes (specify): _____
(9) Unknown

MANUAL RESTRAINTS

NOTES: Encode the applicable data **for each seat position** in the vehicle. The attributes for the variables may be found below. Restraint systems should be assessed during the vehicle inspection then coded on the Occupant Assessment Form.

If a child safety seat is present, encode the data on the back of this page.

If the vehicle has automatic restraints available, encode the appropriate data on the back of the previous page.

		Left	Center	Right
FIRST	Availability	4	0	4
	Use	0	0	0
	Failure Modes	0	0	0
SECOND	Availability			
	Use			
	Failure Modes			
THIRD	Availability			
	Use			
	Failure Modes			
OTHER	Availability			
	Use			
	Failure Modes			

Manual (Active) Belt System Availability

(0) Not available
(1) Belt removed/destroyed
(2) Shoulder belt
(3) Lap belt
(4) Lap and shoulder belt
(5) Belt available — type unknown
(8) Other belt (specify):

_____

(9) Unknown

Manual (Active) Belt System Use

(00) None used, not available, or belt removed/destroyed
(01) Inoperative (specify):

_____

(02) Shoulder belt
(03) Lap belt
(04) Lap and shoulder belt
(05) Belt used — type unknown

_____

(08) Other belt used (specify):

_____

(12) Shoulder belt used with child safety seat
(13) Lap belt used with child safety seat
(14) Lap and shoulder belt used with child safety seat
(15) Belt used with child safety seat — type unknown
(18) Other belt used with child safety seat (specify):

_____

(99) Unknown if belt used

Manual (Active) Belt Failure Modes During Accident

(0) No manual belt used or not available
(1) No manual belt failure(s)
(2) Manual belt failure(s) (encode all that apply above)
[A] Torn webbing (stretched webbing not included)
[B] Broken buckle or latchplate
[C] Upper anchorage separated
[D] Other achorage separated (specify):

_____

[E] Broken retractor
[F] Other manual belt failure (specify):

_____

(9) Unknown

CHILD SAFETY SEAT FIELD ASSESSMENT

When a child safety seat is present enter the occupant's number in the first row and complete the column below the occupant's number using the codes listed below. Complete a column for each child safety seat present.

Occupant Number						
1. Type of Child Safety Seat						
2. Child Safety Seat Orientation						
3. Child Safety Seat Harness Usage						
4. Child Safety Seat Shield Usage						
5. Child Safety Seat Tether Usage						
6. Child Safety Seat Make/Model	Specify Below for Each Child Safety Seat					

1. Type of Child Safety Seat

   (0) No child safety seat
   (1) Infant seat
   (2) Toddler seat
   (3) Convertible seat
   (4) Booster seat
   (7) Other type child safety seat (specify):

   _____

   (8) Unknown child safety seat type
   (9) Unknown if child safety seat used

2. Child Safety Seat Orientation

   (00) No child safety seat

   Designed for Rear Facing for This Age/Weight
   (01) Rear facing
   (02) Forward facing
   (03) Other orientation (specify):

   _____

   (04) Unknown orientation

   Designed for Forward Facing for This Age/Weight
   (11) Rear facing
   (12) Forward facing
   (18) Other orientation (specify):

   _____

   (19) Unknown orientation

   Unknown Design or Orientation for This Age/Weight, or Unknown Age/Weight
   (21) Rear facing
   (22) Forward facing
   (28) Other orientation (specify):

   _____

   (29) Unknown orientation

   (99) Unknown if child safety seat used

3. Child Safety Seat Harness Usage

4. Child Safety Seat Shield Usage

5. Child Safety Seat Tether Usage

   Note: Options Below Are Used for Variables 3-5.

   (00) No child safety seat

   Not Designed with Harness/Shield/Tether
   (01) After market harness/shield/tether added, not used
   (02) After market harness/shield/tether used
   (03) Child safety seat used, but no after market harness/shield/tether added
   (09) Unknown if harness/shield/tether added or used

   Designed with Harness/Shield/Tether
   (11) Harness/shield/tether not used
   (12) Harness/shield/tether used
   (19) Unknown if harness/shield/tether used

   Unknown if Designed with Harness/Shield/Tether
   (21) Harness/shield/tether not used
   (22) Harness/shield/tether used
   (29) Unknown if harness/shield/tether used

   (99) Unknown if child safety seat used

6. Child Safety Seat Make/Model
   (Specify make/model and occupant number)

   _____

   _____

   _____

   _____

HEAD RESTRAINTS/SEAT EVALUATION

NOTES: Encode the applicable data for **each seat position** in the vehicle. The attributes for these variables may be found at the bottom of the page. Head restraint type/damage and seat type/performance should be assessed during the vehicle inspection then coded on the Occupant Assessment Form.

		Left	Center	Right
FIRST	Head Restraint Type/Damage	0	0	0
	Seat Type	08	0	08
	Seat Performance	1	0	2H
SECOND	Head Restraint Type/Damage			
	Seat Type			
	Seat Performance			
THIRD	Head Restraint Type/Damage			
	Seat Type			
	Seat Performance			
OTHER	Head Restraint Type/Damage			
	Seat Type			
	Seat Performance			

Head Restraint Type/Damage by Occupant at This Occupant Position

(0) No head restraints
(1) Integral — no damage
(2) Integral — damaged during accident
(3) Adjustable — no damage
(4) Adjustable — damaged during accident
(5) Add-on — no damage
(6) Add-on — damaged during accident
(8) Other (specify): _____
(9) Unknown

Seat Type (This Occupant Position)

(00) Occupant not seated or no seat
(01) Bucket
(02) Bucket with folding back
(03) Bench
(04) Bench with separate back cushions
(05) Bench with folding back(s)
(06) Split bench with separate back cushions
(07) Split bench with folding back(s)
(08) Pedestal (i.e., van type)
(09) Other seat type (specify): _____
(99) Unknown

Seat Performance (This Occupant Position)

(0) Occupant not seated or no seat
(1) No seat performance failure(s)

(2) Seat performance failure(s)
(Encode all that apply)

[A] Seat adjusters failed
[B] Seat back folding locks failed
[C] Seat tracks failed
[D] Seat anchors failed
[E] Deformed by impact of passenger from rear
[F] Deformed by impact of passenger from front
[G] Deformed by own inertial forces
[H] Deformed by passenger compartment intrusion (specify):
(R) door pushed seat laterally
[I] Other (specify): _____

(9) Unknown

DESCRIBE ANY INDICATION OF ABNORMAL OCCUPANT POSTURE (I.E. UNUSUAL OCCUPANT CONTACT PATTERN)

EJECTION/ENTRAPMENT DATA

Complete the following if the researcher has any indications that an occupant was either ejected from or entrapped in the vehicle. Code the appropriate data on the Occupant Assessment Form.

EJECTION No [ ] Yes [X]

Describe indications of ejection and body parts involved in partial ejection(s):

Occupant Number	01					
Ejection	3					
Ejection Area	1 or 3					
Ejection Medium	3 or 4					
Medium Status	3 or 2					

Ejection
(1) Complete ejection
(2) Partial ejection
(3) Ejection, unknown degree
(9) Unknown

Ejection Area
(1) Windshield
(2) Left front
(3) Right front
(4) Left rear
(5) Right rear
(6) Rear
(7) Roof
(8) Other area (e.g., back of pickup, etc.) (specify): _____
(9) Unknown

Ejection Medium
(1) Door/hatch/tailgate
(2) Nonfixed roof structure
(3) Fixed glazing
(4) Nonfixed glazing (specify): (R) door glass
(5) Integral structure
(8) Other medium (specify): _____
(9) Unknown

Medium Status (Immediately Prior to Impact)
(1) Open
(2) Closed
(3) Integral structure
(9) Unknown

ENTRAPMENT No [X] Yes [ ]

Describe entrapment mechanism: _____

Component(s): _____

(Note in vehicle interior diagram)

U.S. Department of Transportation
National Highway Traffic Safety Administration

Form Approved
O.M.B. No. 2127-0021
NATIONAL ACCIDENT SAMPLING SYSTEM
CRASHWORTHINESS DATA SYSTEM

OCCUPANT INJURY FORM

1. Primary Sampling Unit Number 7 1
2. Case Number–Stratum 1 4 5 B
3. Vehicle Number 0 1
4. Occupant Number 0 1

INJURY DATA

Record below the actual injuries sustained by this occupant that were identified from the official and unofficial data sources. Remember not to double count an injury just because it was identified from two different sources. If greater than twenty injuries have been documented, encode the balance on the Occupant Injury Supplement.

	Source of Injury Data	O.I.C.–A.I.S. Body Region	Aspect	Lesion	System Organ	A.I.S. Severity	Injury Source	Injury Source Confidence Level	Direct/ Indirect Injury	Occupant Area Intrusion No.
1st	5. 8	6. F	7. S	8. L	9. I	10. 1	11. 97	12. 9	13. 7	14. 99
2nd	15.	16.	17.	18.	19.	20.	21.	22.	23.	24.
3rd	25.	26.	27.	28.	29.	30.	31.	32.	33.	34.
4th	35.	36.	37.	38.	39.	40.	41.	42.	43.	44.
5th	45.	46.	47.	48.	49.	50.	51.	52.	53.	54.
6th	55.	56.	57.	58.	59.	60.	61.	62.	63.	64.
7th	65.	66.	67.	68.	69.	70.	71.	72.	73.	74.
8th	75.	76.	77.	78.	79.	80.	81.	82.	83.	84.
9th	85.	86.	87.	88.	89.	90.	91.	92.	93.	94.
10th	95.	96.	97.	98.	99.	100.	101.	102.	103.	104.
11th	105.	106.	107.	108.	109.	110.	111.	112.	113.	114.
12th	115.	116.	117.	118.	119.	120.	121.	122.	123.	124.
13th	125.	126.	127.	128.	129.	130.	131.	132.	133.	134.
14th	135.	136.	137.	138.	139.	140.	141.	142.	143.	144.
15th	145.	146.	147.	148.	149.	150.	151.	152.	153.	154.
16th	155.	156.	157.	158.	159.	160.	161.	162.	163.	164.
17th	165.	166.	167.	168.	169.	170.	171.	172.	173.	174.
18th	175.	176.	177.	178.	179.	180.	181.	182.	183.	184.
19th	185.	186.	187.	188.	189.	190.	191.	192.	193.	194.
20th	195.	196.	197.	198.	199.	200.	201.	202.	203.	204.

HS Form 433B
1/88

This report is authorized by P.L. 89-563, Title 1, Section 106, 108, and 112. While you are not required to respond, your cooperation is needed to make the results of this data collection effort comprehensive, accurate, and timely.

OCCUPANT INJURY DATA SUPPLEMENT

	Source of Injury Data	O.I.C. – A.I.S.					Injury Source	Injury Source Confidence Level	Direct/ Indirect Injury	Occupant Area Intrusion No.
		Body Region	Aspect	Lesion	System Organ	A.I.S. Severity				
21st	—	—	—	—	—	—	— —	—	—	— —
22nd	—	—	—	—	—	—	— —	—	—	— —
23rd	—	—	—	—	—	—	— —	—	—	— —
24th	—	—	—	—	—	—	— —	—	—	— —
25th	—	—	—	—	—	—	— —	—	—	— —
26th	—	—	—	—	—	—	— —	—	—	— —
27th	—	—	—	—	—	—	— —	—	—	— —
28th	—	—	—	—	—	—	— —	—	—	— —
29th	—	—	—	—	—	—	— —	—	—	— —
30th	—	—	—	—	—	—	— —	—	—	— —
31st	—	—	—	—	—	—	— —	—	—	— —
32nd	—	—	—	—	—	—	— —	—	—	— —
33rd	—	—	—	—	—	—	— —	—	—	— —
34th	—	—	—	—	—	—	— —	—	—	— —
35th	—	—	—	—	—	—	— —	—	—	— —
36th	—	—	—	—	—	—	— —	—	—	— —
37th	—	—	—	—	—	—	— —	—	—	— —
38th	—	—	—	—	—	—	— —	—	—	— —
39th	—	—	—	—	—	—	— —	—	—	— —
40th	—	—	—	—	—	—	— —	—	—	— —
41st	—	—	—	—	—	—	— —	—	—	— —
42nd	—	—	—	—	—	—	— —	—	—	— —
43rd	—	—	—	—	—	—	— —	—	—	— —
44th	—	—	—	—	—	—	— —	—	—	— —
45th	—	—	—	—	—	—	— —	—	—	— —

OFFICIAL INJURY DATA—SOFT TISSUE INJURIES

Indicate the *Location, Lesion, Detail* (size, depth, fracture type, head injury clinical signs and neurological deficits), and *Source* of all injuries indicated by official sources (or from PAR or other unofficial sources if medical records and interviewee data are unavailable.)

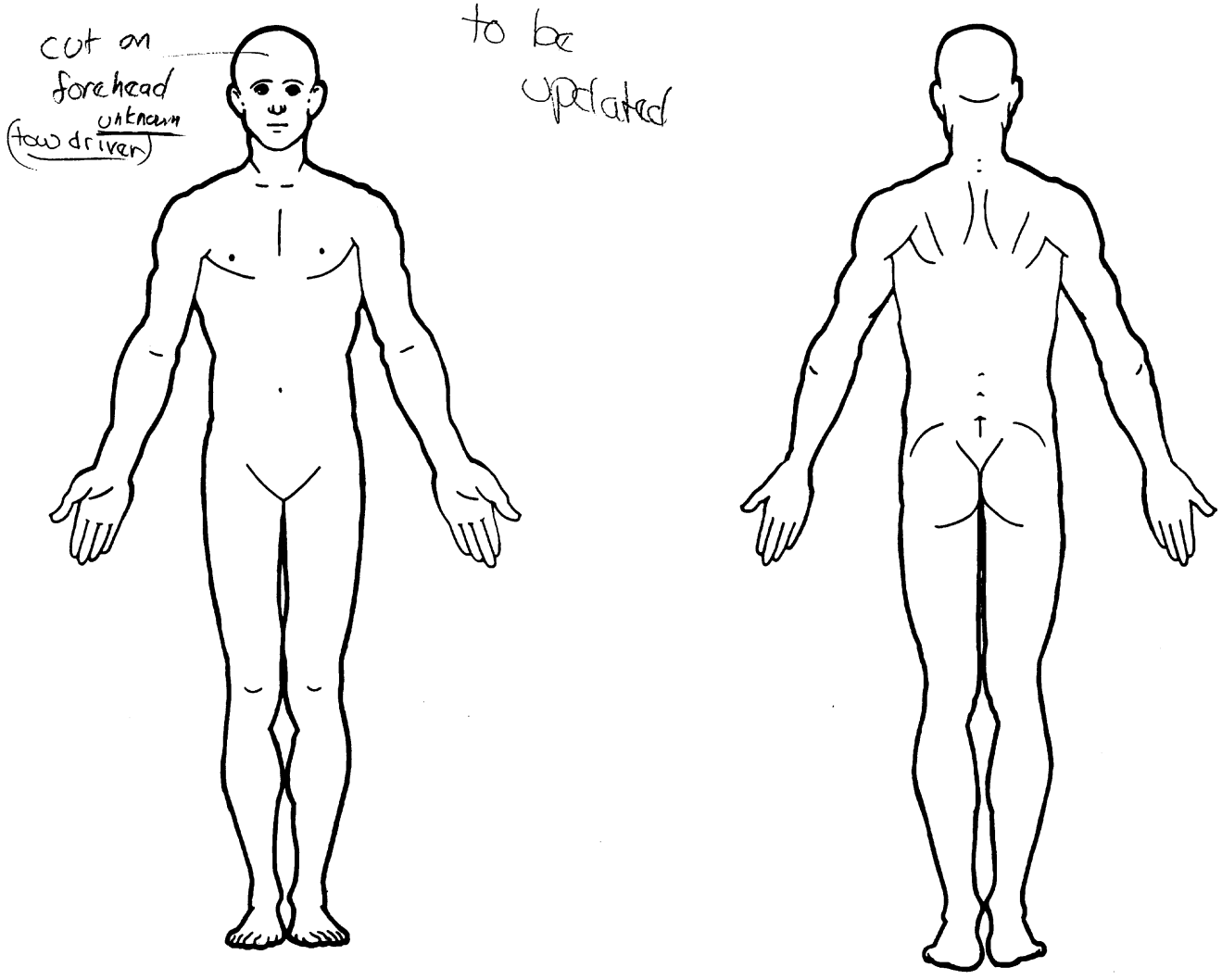

SOURCE OF INJURY DATA

OFFICIAL

(1) Autopsy records with or without hospital medical records
(2) Hospital medical records other than emergency room (eg. discharge summary)
(3) Emergency room records only (including associated X-rays or other lab reports)
(4) Private physician, walk-in or emergency clinic

UNOFFICIAL

(5) Lay coroner report
(6) E.M.S. personnel
(7) Interviewee
(8) Other source (specify): tow driver
(9) Police

INJURY SOURCE

FRONT

(01) Windshield
(02) Mirror
(03) Sunvisor
(04) Steering wheel rim
(05) Steering wheel hub/spoke
(06) Steering wheel (combination of codes 04 and 05)
(07) Steering column, transmission selector lever, other attachment
(08) Add-on equipment (e.g., CB, tape deck, air conditioner)
(09) Left instrument panel and below
(10) Center instrument panel and below
(11) Right instrument panel and below
(12) Glove compartment door
(13) Knee bolster
(14) Windshield including one or more of the following: front header, A-pillar, instrument panel, mirror, or steering assembly (driver side only)
(15) Windshield including one or more of the following: front header, A-pillar, instrument panel, or mirror (passenger side only)
(16) Other front object (specify): _____

LEFT SIDE

(20) Left side interior surface, excluding hardware or armrests
(21) Left side hardware or armrest
(22) Left A pillar
(23) Left B pillar
(24) Other left pillar (specify): _____
(25) Left side window glass or frame
(26) Left side window glass including one or more of the following: frame, window sill, A-pillar, B-pillar, or roof side rail
(27) Other left side object (specify): _____

RIGHT SIDE

(30) Right side interior surface, excluding hardware or armrests
(31) Right side hardware or armrest
(32) Right A pillar
(33) Right B pillar
(34) Other right pillar (specify): _____
(35) Right side window glass or frame
(36) Right side window glass including one or more of the following: frame, window sill, A-pillar, B-pillar, roof side rail
(37) Other right side object (specify): _____

INTERIOR

(40) Seat, back support
(41) Belt restraint webbing/buckle
(42) Belt restraint B-pillar attachment point
(43) Other restraint system component (specify): _____
(44) Head restraint system
(45) Air cushion
(46) Other occupants (specify): _____
(47) Interior loose objects
(48) Child safety seat (specify): _____
(49) Other interior object (specify): _____

ROOF

(50) Front header
(51) Rear header
(52) Roof left side rail
(53) Roof right side rail
(54) Roof or convertible top

FLOOR

(56) Floor including toe pan
(57) Floor or console mounted transmission lever, including console
(58) Parking brake handle
(59) Foot controls including parking brake

REAR

(60) Backlight (rear window)
(61) Backlight storage rack, door, etc.
(62) Other rear object (specify): _____

EXTERIOR OF OCCUPANT'S VEHICLE

(65) Hood
(66) Outside hardware (e.g., outside mirror, antenna)
(67) Other exterior surface or tires (specify): _____
(68) Unknown exterior objects

EXTERIOR OF OTHER MOTOR VEHICLE

(70) Front bumper
(71) Hood edge
(72) Other front of vehicle (specify): _____
(73) Hood
(74) Hood ornament
(75) Windshield, roof rail, A-pillar
(76) Side surface
(77) Side mirrors
(78) Other side protrusions (specify): _____
(79) Rear surface
(80) Undercarriage
(81) Tires and wheels
(82) Other exterior of other motor vehicle (specify): _____
(83) Unknown exterior of other motor vehicle

OTHER VEHICLE OR OBJECT IN THE ENVIRONMENT

(84) Ground
(85) Other vehicle or object (specify) _____
(86) Unknown vehicle or object

NONCONTACT INJURY

(90) Fire in vehicle
(91) Flying glass
(92) Other noncontact injury source (specify) _____
(97) Injured, unknown source

INJURY SOURCE CONFIDENCE LEVEL

(1) Certain
(2) Probable
(3) Possible
(9) Unknown

DIRECT/INDIRECT INJURY

(1) Direct contact injury
(2) Indirect contact injury
(3) Noncontact injury
(7) Injured, unknown source

OCCUPANT INJURY CLASSIFICATION

O.I.C. Body Region

(M) Abdomen
(Q) Ankle–foot
(A) Arm (upper)
(B) Back–thoracolumbar spine
(C) Chest
(E) Elbow
(F) Face
(R) Forearm
(H) Head–skull
(U) Injured, unknown region
(K) Knee
(L) Leg (lower)
(Y) Lower limb(s) (whole or unknown part)
(N) Neck–cervical spine
(P) Pelvic–hip
(S) Shoulder
(T) Thigh
(X) Upper limb(s) (whole or unknown part)
(O) Whole body
(W) Wrist–hand

Aspect of Injury

(A) Anterior–front
(C) Central
(I) Inferior–lower
(U) Injured, unknown aspect
(L) Left
(P) Posterior–back
(R) Right
(S) Superior–upper
(W) Whole region

Lesion

(A) Abrasion
(M) Amputation
(V) Avulsion
(B) Burn
(K) Concussion
(C) Contusion
(N) Crush
(G) Detachment, separation
(D) Dislocation
(F) Fracture
(Z) Fracture and dislocation
(U) Injured, unknown lesion
(L) Laceration
(O) Other
(P) Perforation, puncture
(R) Rupture
(S) Sprain
(T) Strain
(E) Total severance, transection

System/Organ

(W) All systems in region
(A) Arteries–veins
(B) Brain
(D) Digestive
(E) Ears
(O) Eye
(H) Heart
(U) Injured, unknown system
(I) Integumentary
(J) Joints
(K) Kidneys
(L) Liver
(M) Muscles
(N) Nervous system
(P) Pulmonary–lungs
(R) Respiratory
(S) Skeletal
(C) Spinal cord
(Q) Spleen
(T) Thyroid, other endocrine gland
(G) Urogenital
(V) Vertebrae

Abbreviated Injury Scale

(1) Minor injury
(2) Moderate injury
(3) Serious injury
(4) Severe injury
(5) Critical injury
(6) Maximum (untreatable)
(7) Injured, unknown severity

OFFICIAL INJURY DATA—SKELETAL INJURIES

Indicate the *Location, Lesion, Detail* (size, depth, fracture type, head injury clinical signs and neurological deficits), and *Source* of all injuries indicated by official sources (or from PAR or other unofficial sources if medical records and interviewee data are unavailable.)

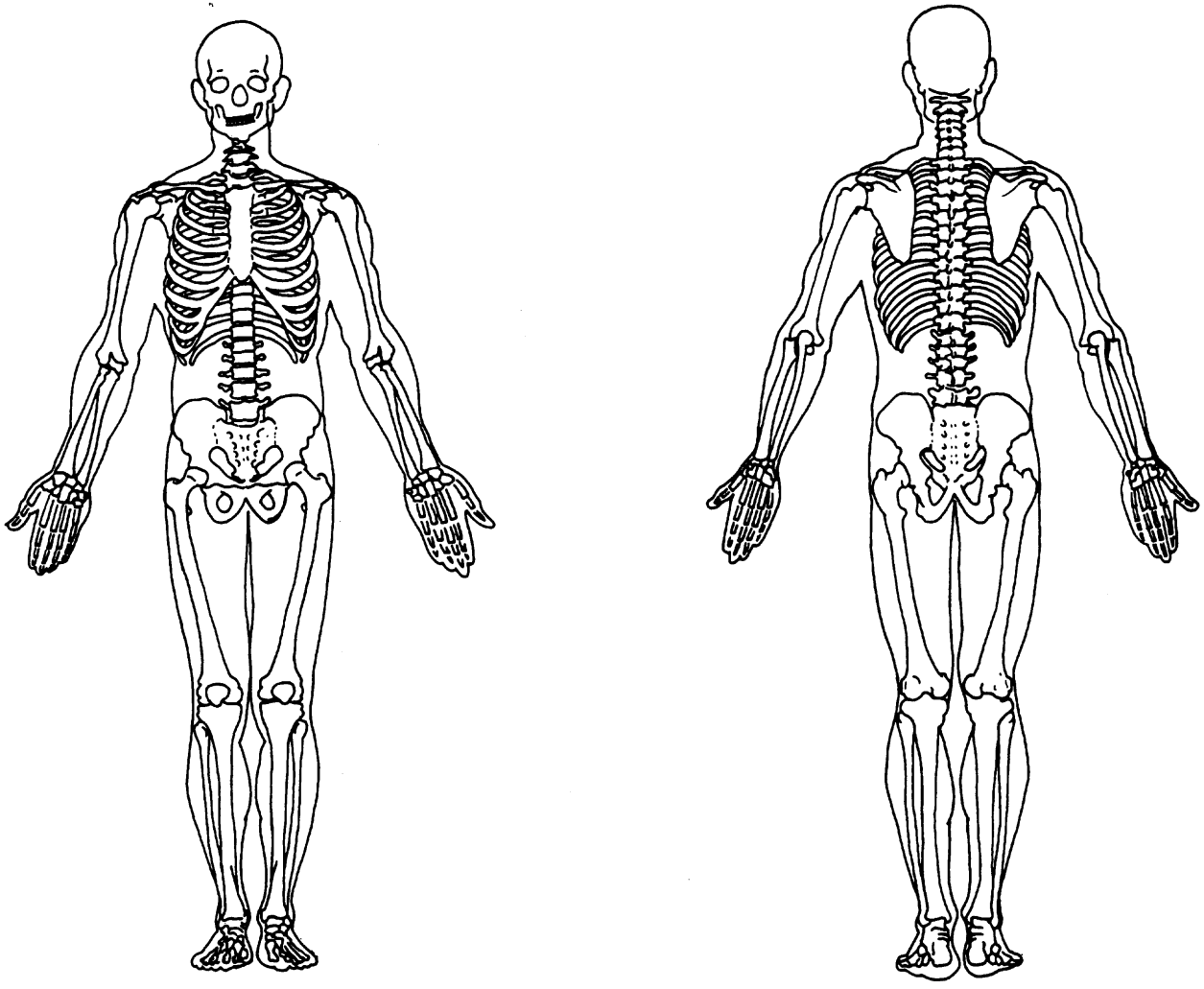

OFFICIAL INJURY DATA – INTERNAL INJURIES

Indicate the *Location, Lesion, Detail* (size, depth, fracture type, head injury clinical signs and neurological deficits), and *Source* of all injuries indicated by official sources (or from PAR or other unofficial sources if medical records and interviewee data are unavailable.)

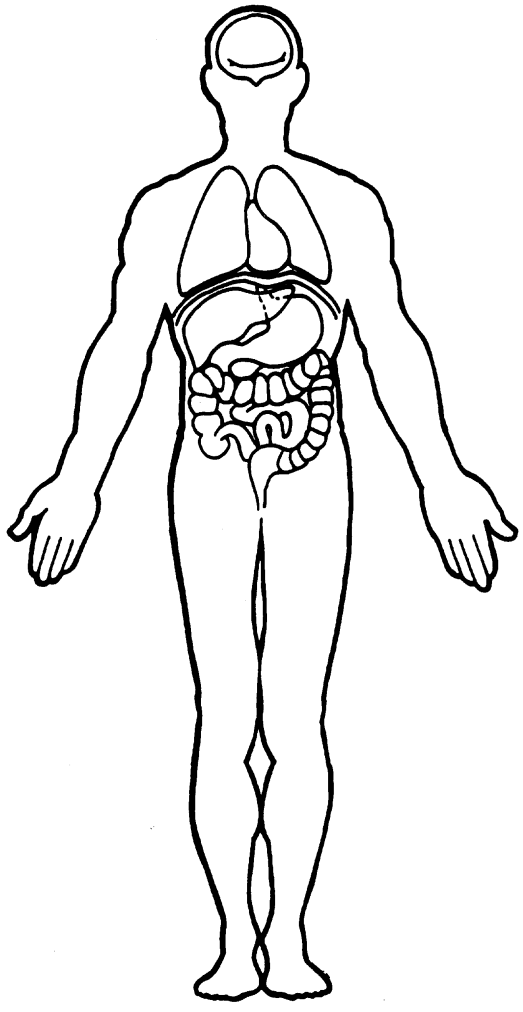

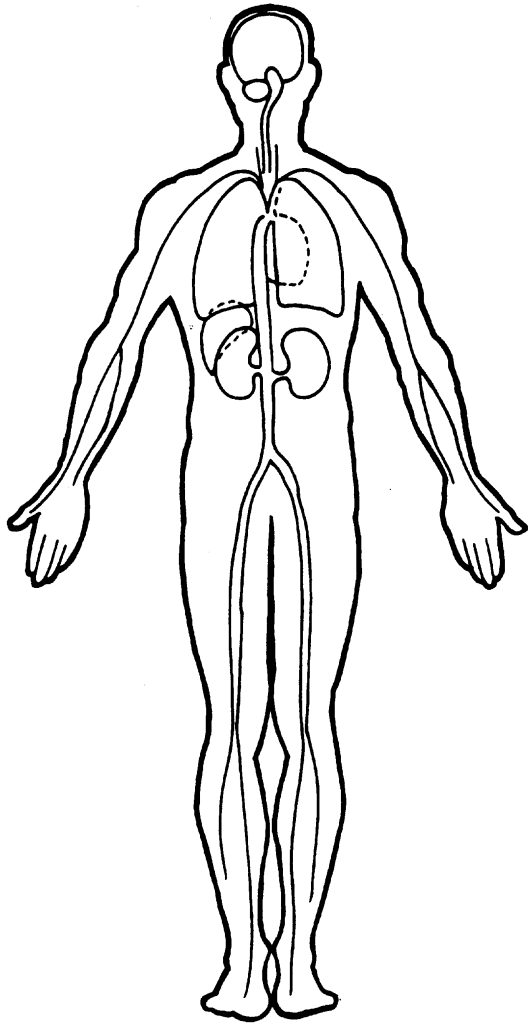

U.S. Department of Transportation
National Highway Traffic Safety Administration

UPDATE FORM

NATIONAL ACCIDENT SAMPLING SYSTEM
CRASHWORTHINESS DATA SYSTEM

1. Primary Sampling Unit Number 7 1
2. Case Number – Stratum 1 4 5 B
3. Vehicle Number 0 1
4. Occupant Number 0 1

Driver or Occupant Name: _____

Address: _____

Other Information: _____

(Sanitize this section prior to Update submission.)

INJURY DATA CODED ON INITIAL SUBMISSION

	Source of Injury Data	O.I.C.–A.I.S. Body Region	Aspect	Lesion	System Organ	A.I.S. Severity	Injury Source	Injury Source Confidence Level	Direct/ Indirect Injury	Occupant Area Intrusion No.
1st	5. S (tow driver)	6. F	7. S	8. L	9. I	10. 1	11. 9 7	12. 9	13. 7	14. 9 9
2nd	15.	16.	17.	18.	19.	20.	21.	22.	23.	24.
3rd	25.	26.	27.	28.	29.	30.	31.	32.	33.	34.
4th	35.	36.	37.	38.	39.	40.	41.	42.	43.	44.
5th	45.	46.	47.	48.	49.	50.	51.	52.	53.	54.
6th	55.	56.	57.	58.	59.	60.	61.	62.	63.	64.
7th	65.	66.	67.	68.	69.	70.	71.	72.	73.	74.
8th	75.	76.	77.	78.	79.	80.	81.	82.	83.	84.
9th	85.	86.	87.	88.	89.	90.	91.	92.	93.	94.
10th	95.	96.	97.	98.	99.	100.	101.	102.	103.	104.

NOTE: If necessary, keep copy of original Occupant Injury form and submit as part of update.

UPDATED CASE INFORMATION

	INITIAL SUBMISSION	FINAL
GV12. Alcohol Test Results for Driver	2 9	
OA05. Occupant's Age	4 3	
OA06. Occupant's Sex	1	
OA07. Occupant's Height	9 9	
OA08. Occupant's Weight	9 9 9	
OA17. Manual (Active) Belt System Availability	4	
OA18. Manual (Active) Belt System Use	0 0	
OA21. Automatic (Passive) Restraint System Availability	0	
OA22. Automatic (Passive) Restraint Function	0	

	INITIAL SUBMISSION	FINAL
OA35. Treatment – Mortality	0 1	
OA36. Type of Medical Facility (for Initial Treatment)	0	
OA37. Hospital Stay	0 0	
OA38. Working Days Lost	6 2	
OA39. Time to Death	0 1	
OA40. 1st Medically Reported Cause of Death	9 9	
OA41. 2nd Medically Reported Cause of Death	0 0	
OA42. 3rd Medically Reported Cause of Death	0 0	
OA43. Number of Recorded Injuries for This Occupant	0 1	0 3

HS Form 433C
1/88

INJURY DATA

Record below the actual injuries sustained by this occupant that were identified from the unofficial and official sources prior to initial case submission **and from subsequently** acquired medical data. Remember not to double count an injury just because it was identified from two different sources.

	Source of Injury Data	O.I.C.—A.I.S. Body Region	Aspect	Lesion	System Organ	A.I.S. Severity	Injury Source	Injury Source Confidence Level	Direct/ Indirect Injury	Occupant Area Intrusion No.
1st	5. 2	6. U	7. U	8. U	9. U	10. 7	11. 97	12. 9	13. 7	14. 00
2nd	15. 2	16. U	17. U	18. U	19. U	20. 7	21. 97	22. 9	23. 7	24. 00
3rd	25. 8	26. F	27. S	28. L	29. I	30. 1	31. 97	32. 9	33. 7	34. 00
4th	35.	36.	37.	38.	39.	40.	41.	42.	43.	44.
5th	45.	46.	47.	48.	49.	50.	51.	52.	53.	54.
6th	55.	56.	57.	58.	59.	60.	61.	62.	63.	64.
7th	65.	66.	67.	68.	69.	70.	71.	72.	73.	74.
8th	75.	76.	77.	78.	79.	80.	81.	82.	83.	84.
9th	85.	86.	87.	88.	89.	90.	91.	92.	93.	94.
10th	95.	96.	97.	98.	99.	100.	101.	102.	103.	104.
11th	105.	106.	107.	108.	109.	110.	111.	112.	113.	114.
12th	115.	116.	117.	118.	119.	120.	121.	122.	123.	124.
13th	125.	126.	127.	128.	129.	130.	131.	132.	133.	134.
14th	135.	136.	137.	138.	139.	140.	141.	142.	143.	144.
15th	145.	146.	147.	148.	149.	150.	151.	152.	153.	154.
16th	155.	156.	157.	158.	159.	160.	161.	162.	163.	164.
17th	165.	166.	167.	168.	169.	170.	171.	172.	173.	174.
18th	175.	176.	177.	178.	179.	180.	181.	182.	183.	184.
19th	185.	186.	187.	188.	189.	190.	191.	192.	193.	194.
20th	195.	196.	197.	198.	199.	200.	201.	202.	203.	204.

If greater than 20 injuries, code additional on Occupant Injury Data Supplement.

OCCUPANT INJURY DATA SUPPLEMENT

	Source of Injury Data	O.I.C.–A.I.S. Body Region	Aspect	Lesion	System Organ	A.I.S. Severity	Injury Source	Injury Source Confidence Level	Direct/ Indirect Injury	Occupant Area Intrusion No.
21st	—	—	—	—	—	—	— —	—	—	— —
22nd	—	—	—	—	—	—	— —	—	—	— —
23rd	—	—	—	—	—	—	— —	—	—	— —
24th	—	—	—	—	—	—	— —	—	—	— —
25th	—	—	—	—	—	—	— —	—	—	— —
26th	—	—	—	—	—	—	— —	—	—	— —
27th	—	—	—	—	—	—	— —	—	—	— —
28th	—	—	—	—	—	—	— —	—	—	— —
29th	—	—	—	—	—	—	— —	—	—	— —
30th	—	—	—	—	—	—	— —	—	—	— —
31st	—	—	—	—	—	—	— —	—	—	— —
32nd	—	—	—	—	—	—	— —	—	—	— —
33rd	—	—	—	—	—	—	— —	—	—	— —
34th	—	—	—	—	—	—	— —	—	—	— —
35th	—	—	—	—	—	—	— —	—	—	— —
36th	—	—	—	—	—	—	— —	—	—	— —
37th	—	—	—	—	—	—	— —	—	—	— —
38th	—	—	—	—	—	—	— —	—	—	— —
39th	—	—	—	—	—	—	— —	—	—	— —
40th	—	—	—	—	—	—	— —	—	—	— —
41st	—	—	—	—	—	—	— —	—	—	— —
42nd	—	—	—	—	—	—	— —	—	—	— —
43rd	—	—	—	—	—	—	— —	—	—	— —
44th	—	—	—	—	—	—	— —	—	—	— —
45th	—	—	—	—	—	—	— —	—	—	— —

BEST AVAILABLE

OFFICIAL INJURY DATA—SOFT TISSUE INJURIES

Indicate the *Location, Lesion, Detail* (size, depth, fracture type, head injury clinical signs and neurological deficits), and *Source* of all injuries indicated by official sources (or from PAR or other unofficial sources if medical records and interviewee data are unavailable.)

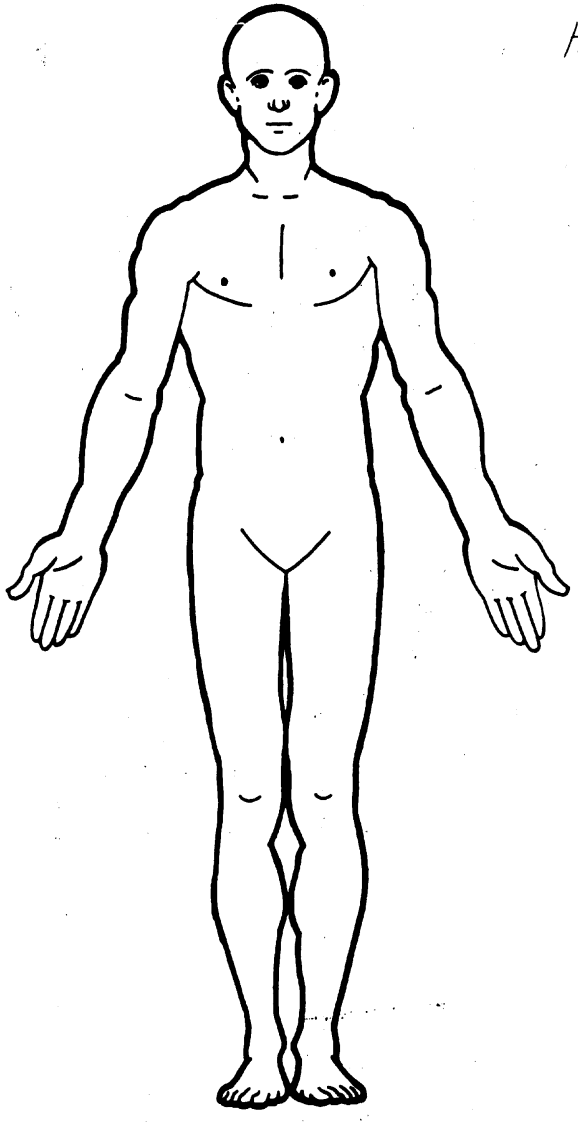

Hemorrhage due to
massive internal Injuries
nonspecific

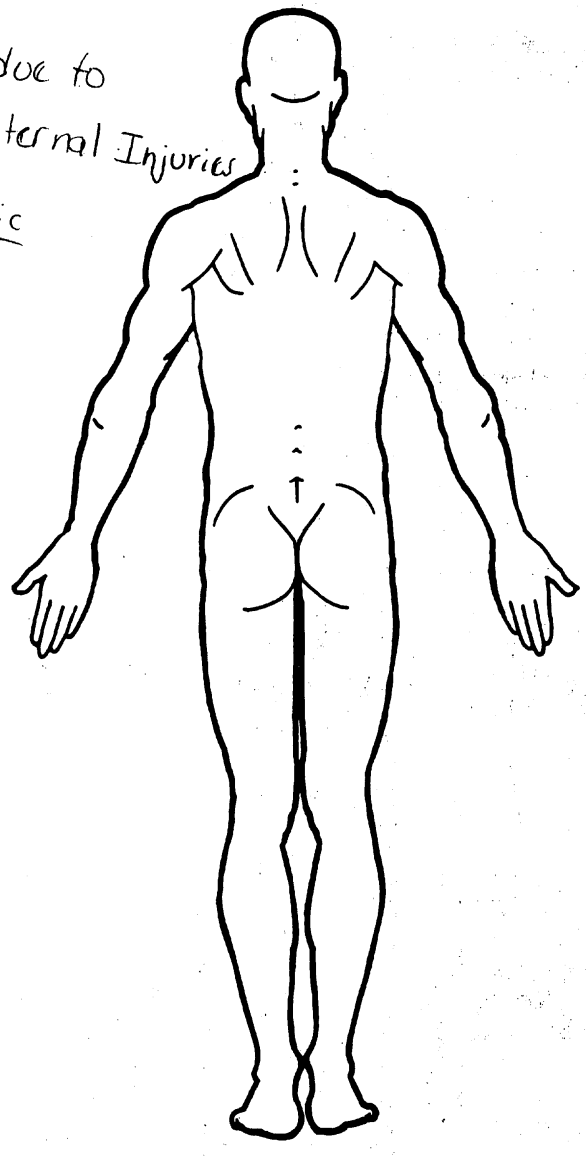

SOURCE OF INJURY DATA

OFFICIAL

(1) Autopsy records with or without hospital medical records
(2) Hospital medical records other than emergency room (eg. discharge summary)
(3) Emergency room records only (including associated X-rays or other lab reports)
(4) Private physician, walk-in or emergency clinic

UNOFFICIAL

(5) Lay coroner report
(6) E.M.S. personnel
(7) Interviewee
(8) Other source (specify): _____
(9) Police

INJURY SOURCE

FRONT

(01) Windshield
(02) Mirror
(03) Sunvisor
(04) Steering wheel rim
(05) Steering wheel hub/spoke
(06) Steering wheel (combination of codes 04 and 05)
(07) Steering column, transmission selector lever, other attachment
(08) Add-on equipment (e.g., CB, tape deck, air conditioner)
(09) Left instrument panel and below
(10) Center instrument panel and below
(11) Right instrument panel and below
(12) Glove compartment door
(13) Knee bolster
(14) Windshield including one or more of the following: front header, A-pillar, instrument panel, mirror, or steering assembly (driver side only)
(15) Windshield including one or more of the following: front header, A-pillar, instrument panel, or mirror (passenger side only)
(16) Other front object (specify): _____

LEFT SIDE

(20) Left side interior surface, excluding hardware or armrests
(21) Left side hardware or armrest
(22) Left A pillar
(23) Left B pillar
(24) Other left pillar (specify): _____
(25) Left side window glass or frame
(26) Left side window glass including one or more of the following: frame, window sill, A-pillar, B-pillar, or roof side rail
(27) Other left side object (specify): _____

RIGHT SIDE

(30) Right side interior surface, excluding hardware or armrests
(31) Right side hardware or armrest
(32) Right A pillar
(33) Right B pillar
(34) Other right pillar (specify): _____
(35) Right side window glass or frame
(36) Right side window glass including one or more of the following: frame, window sill, A-pillar, B-pillar, roof side rail
(37) Other right side object (specify): _____

INTERIOR

(40) Seat, back support
(41) Belt restraint webbing/buckle
(42) Belt restraint B-pillar attachment point
(43) Other restraint system component (specify): _____
(44) Head restraint system
(45) Air cushion
(46) Other occupants (specify): _____
(47) Interior loose objects
(48) Child safety seat (specify): _____
(49) Other interior object (specify): _____

ROOF

(50) Front header
(51) Rear header
(52) Roof left side rail
(53) Roof right side rail
(54) Roof or convertible top

FLOOR

(56) Floor including toe pan
(57) Floor or console mounted transmission lever, including console
(58) Parking brake handle
(59) Foot controls including parking brake

REAR

(60) Backlight (rear window)
(61) Backlight storage rack, door, etc.
(62) Other rear object (specify): _____

EXTERIOR OF OCCUPANT'S VEHICLE

(65) Hood
(66) Outside hardware (e.g., outside mirror, antenna)
(67) Other exterior surface or tires (specify): _____
(68) Unknown exterior objects

EXTERIOR OF OTHER MOTOR VEHICLE

(70) Front bumper
(71) Hood edge
(72) Other front of vehicle (specify): _____
(73) Hood
(74) Hood ornament
(75) Windshield, roof rail, A-pillar
(76) Side surface
(77) Side mirrors
(78) Other side protrusions (specify): _____
(79) Rear surface
(80) Undercarriage
(81) Tires and wheels
(82) Other exterior of other motor vehicle (specify): _____
(83) Unknown exterior of other motor vehicle

OTHER VEHICLE OR OBJECT IN THE ENVIRONMENT

(84) Ground
(85) Other vehicle or object (specify) _____
(86) Unknown vehicle or object

NONCONTACT INJURY

(90) Fire in vehicle
(91) Flying glass
(92) Other noncontact injury source (specify) _____
(97) Injured, unknown source

INJURY SOURCE CONFIDENCE LEVEL

(1) Certain
(2) Probable
(3) Possible
(9) Unknown

DIRECT/INDIRECT INJURY

(1) Direct contact injury
(2) Indirect contact injury
(3) Noncontact injury
(7) Injured, unknown source

OCCUPANT INJURY CLASSIFICATION

O.I.C. Body Region

(M) Abdomen
(Q) Ankle–foot
(A) Arm (upper)
(B) Back–thoracolumbar spine
(C) Chest
(E) Elbow
(F) Face
(R) Forearm
(H) Head–skull
(U) Injured, unknown region
(K) Knee
(L) Leg (lower)
(Y) Lower limb(s) (whole or unknown part)
(N) Neck–cervical spine
(P) Pelvic–hip
(S) Shoulder
(T) Thigh
(X) Upper limb(s) (whole or unknown part)
(O) Whole body
(W) Wrist–hand

Aspect of Injury

(A) Anterior–front
(C) Central
(I) Inferior–lower
(U) Injured, unknown aspect
(L) Left
(P) Posterior–back
(R) Right
(S) Superior–upper
(W) Whole region

Lesion

(A) Abrasion
(M) Amputation
(V) Avulsion
(B) Burn
(K) Concussion
(C) Contusion
(N) Crush
(G) Detachment, separation
(D) Dislocation
(F) Fracture
(Z) Fracture and dislocation
(U) Injured, unknown lesion
(L) Laceration
(O) Other
(P) Perforation, puncture
(R) Rupture
(S) Sprain
(T) Strain
(E) Total severance, transection

System/Organ

(W) All systems in region
(A) Arteries–veins
(B) Brain
(D) Digestive
(E) Ears
(O) Eye
(H) Heart
(U) Injured, unknown system
(I) Integumentary
(J) Joints
(K) Kidneys
(L) Liver
(M) Muscles
(N) Nervous system
(P) Pulmonary–lungs
(R) Respiratory
(S) Skeletal
(C) Spinal cord
(Q) Spleen
(T) Thyroid, other endocrine gland
(G) Urogenital
(V) Vertebrae

Abbreviated Injury Scale

(1) Minor injury
(2) Moderate injury
(3) Serious injury
(4) Severe injury
(5) Critical injury
(6) Maximum (untreatable)
(7) Injured, unknown severity

BEST AVAILABLE

OFFICIAL INJURY DATA—SKELETAL INJURIES

Indicate the *Location, Lesion, Detail* (size, depth, fracture type, head injury clinical signs and neurological deficits), and *Source* of all injuries indicated by official sources (or from PAR or other unofficial sources if medical records and interviewee data are unavailable.)

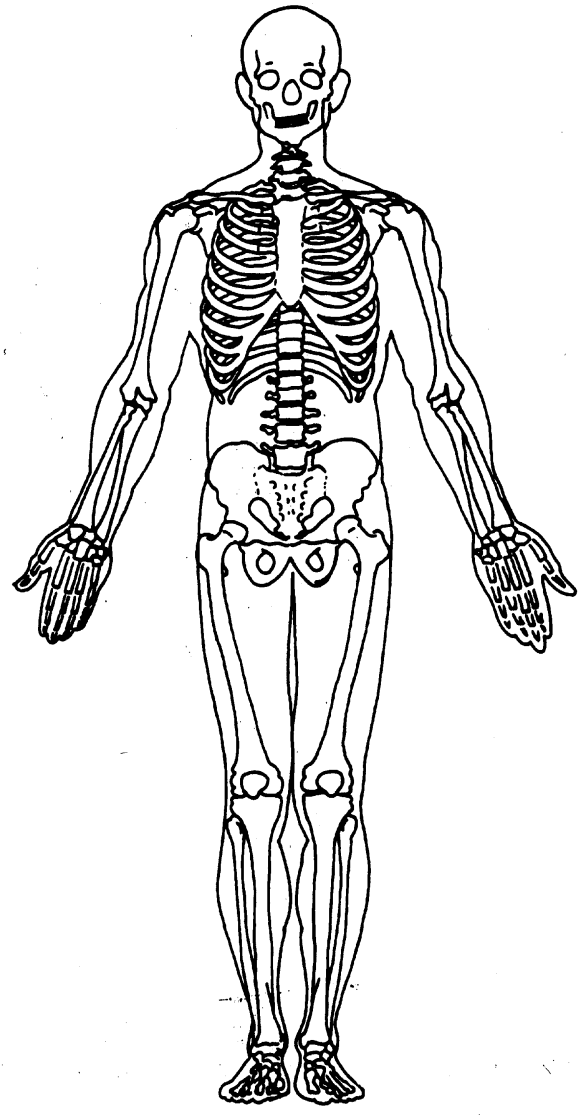

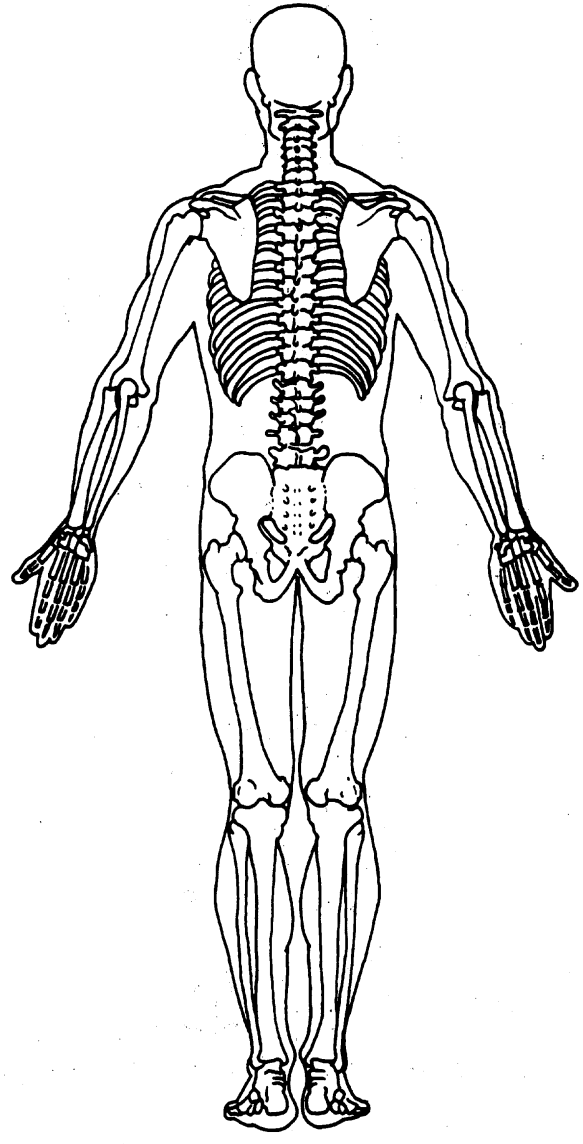

OFFICIAL INJURY DATA—INTERNAL INJURIES

Indicate the *Location, Lesion, Detail* (size, depth, fracture type, head injury clinical signs and neurological deficits), and *Source* of all injuries indicated by official sources (or from PAR or other unofficial sources if medical records and interviewee data are unavailable.)

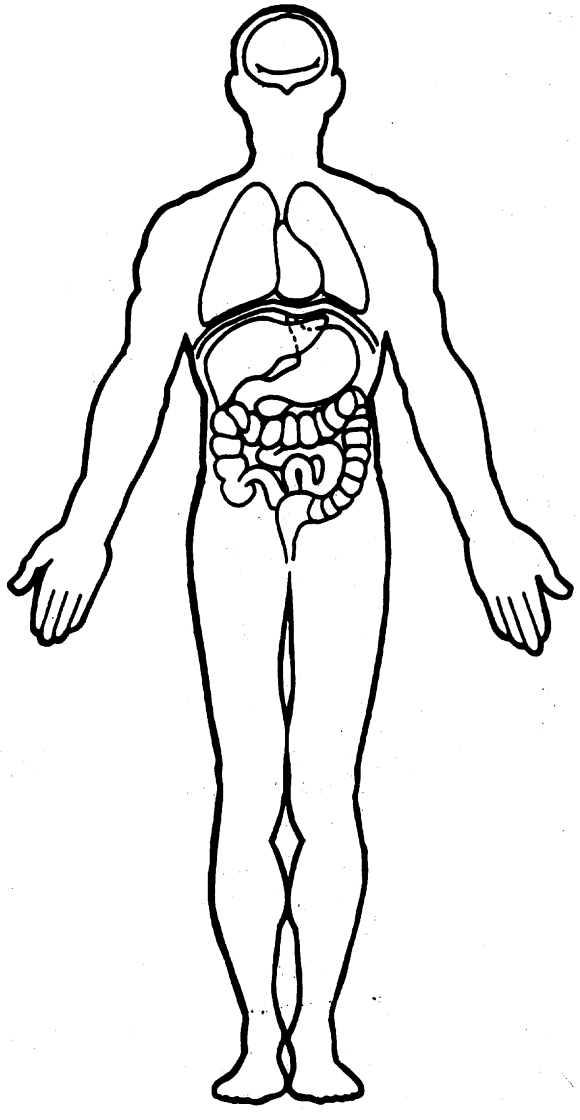

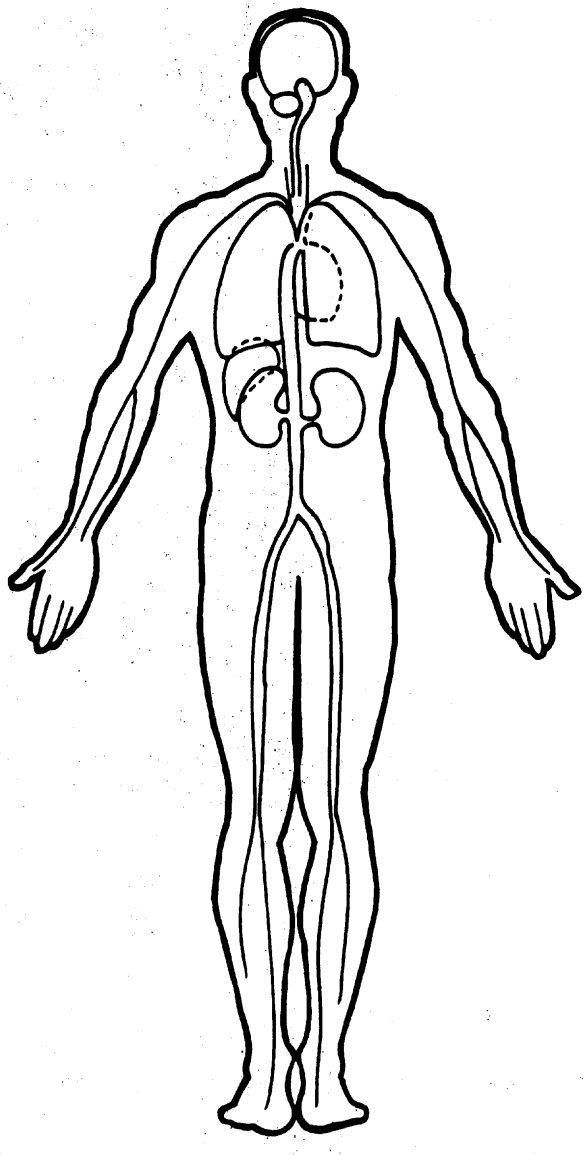

BEST AVAILABLE

1988 ACCIDENT FORM

1. PSU Number 71 2. Case Number 145B

IDENTIFICATION

3. No. of G.V. Forms Sub. 01 4. Accident Date [redacted]88 5. Accident Time 2119

SPECIAL STUDIES INDICATORS

6. WINDSHIELD 0 7. SS13 0 8. SS14 0 9. SS15 0 10. SS16 0

NUMBER OF EVENTS 11. Number of Recorded Events in Accident 03

ACCIDENT EVENTS

Accident Sequence Number	Vehicle Number	Class of Vehicle	General Area of Damage	Veh. Num. or Obj. Cont.	Class of Vehicle	General Area of Damage
012. 01	013. 01	014. 14	015. N	016. 31	017. 00	018. N
019. 02	020. 01	021. 14	022. F	023. 42	024. 00	025. 0
026. 03	027. 01	028. 14	029. L	030. 42	031. 00	032. 0

1988 GENERAL VEHICLE FORM

1. PSU Number 71
2. Case Number 145B
3. Vehicle Number 01

VEHICLE IDENTIFICATION

4. Model Year	81	5. Make	12
6. Model	474	7. Body Type	21
8. VIN	1FTHE34G8BH[redacted]		

OFFICIAL RECORDS

9. Police Reported Disposition	1	10. Police Reported Travel Speed	99
11. Police Rep. Alcohol/Drug Pres.	7	12. Alcohol Test Result for Driver	29

ACCIDENT RELATED

13. Speed Limit	55	14. Attempted Avoid. Manuever	01
15. Accident Type	06		

1988 GENERAL VEHICLE FORM

1. PSU Number 71
2. Case Number 145B
3. Vehicle Number 01

OCCUPANT RELATED

16. Driver Presence in Vehicle 1
17. No. Occupants This Vehicle 01
18. No. Occupant Forms Submitted 01

VEHICLE WEIGHT ITEMS

19. Vehicle Curb Weight 044
20. Vehicle Cargo Weight 01

RECONSTRUCTION DATA

21. Towed Trailing Unit 0
22. Trajectory Data Documented 0
23. Post Col. Cond. of Tree/Pole 0
24. Rollover 2

OVERRIDE/UNDERRIDE (this vehicle)

25. F 0 26. R 0

HEADING ANGLE AT IMPACT FOR HIGHEST DELTA V

27. Heading Angle This Vehicle 997
28. Heading Angle Other Vehicle 997
29. Basis for Total Delta V 5

1988 GENERAL VEHICLE FORM

1. PSU Number 71
2. Case Number 145B
3. Vehicle Number 01

COMPUTER GENERATED DELTA V

30. Total Delta V 99
31. Longitudinal Component of Delta V 99
32. Lateral Component of Delta V 99
33. Energy Absorption 9999
34. Confidence in Reconstruction Program Results 0
35. Type of Vehicle Inspection 1

GG0191 2 If ALCOHOL TEST GV12 equals 05-49, then ALCOHOL/DRUG PRESENCE
GG0192 GV11 should equal 1, 3 or 4.

1988 VEHICLE EXTERIOR FORM

1. PSU Number 71
2. Case Number 145B
3. Vehicle Number 01

COLLISION DEFORMATION CLASSIFICATION
HIGHEST DELTA "V"

Accident Sequence Number	Object Contacted	Direction of Force	Deform. Location	Specific Longitud. or lat. Location	Specific Vertical or Lateral Location	Type of Damage Distrib.	Deform. Extent
4. 01	5. 31	6. 00	7. F	8. R	9. A	10. O	11. 09

SECOND HIGHEST DELTA "V"

12. 02	13. 42	14. 00	15. F	16. D	17. G	18. W	19. 09

1988 VEHICLE EXTERIOR FORM

1. PSU Number 71
2. Case Number 145B
3. Vehicle Number 01

CRUSH PROFILE
HIGHEST DELTA "V"

20.	21.						22.
L	C1	C2	C3	C4	C5	C6	+/-D
075	00	00	00	00	01	19	000

SECOND HIGHEST DELTA "V"

23.	24.						25.
L	C1	C2	C3	C4	C5	C6	+/-D

26. CDCS Documented but not coded 1 27. Researchers Assess. Veh. Disp. 1

28. Original Wheelbase 138.0

1988 VEHICLE INTERIOR FORM

1. PSU Number 71
2. Case Number 145B
3. Vehicle Number 01

INTEGRITY

4. Passenger Compartment 98

Door, Tailgate or Hatch opening

5. LF 1 6. RF 3 7. LR 0 8. RR 3 9. TG/H 3

Damage/Failure Associated with Door, Tailgate or Hatch Opening in Collision

10. LF 0 11. RF 0 12. LR 0 13. RR 0 14. TG/H 0

1988 VEHICLE INTERIOR FORM

1. PSU Number 71
2. Case Number 145B
3. Vehicle Number 01

GLAZING

Glazing Damage

15. WS 2 16. LF 6 17. RF 6 18. LR 8 19. RR 0
20. BL 0 21. Roof 8 22. Other 6

Glazing Damage from Occupant Contact

23. WS 0 24. LF 0 25. RF 0 26. LR 0 27. RR 0
28. BL 0 29. Roof 0 30. Other 0

1988 VEHICLE INTERIOR FORM

1. PSU Number 71
2. Case Number 145B
3. Vehicle Number 01

GLAZING (Cont.)

Type of Window/Windshield Glazing

31. WS 1 32. LF 2 33. RF 2 34. LR 0 35. RR 0
36. BL 0 37. Roof 0 38. Other 2

Window Precrash Glazing Status

39. WS 1 40. LF 2 41. RF 2 42. LR 0 43. RR 0
44. BL 0 45. Roof 0 46. Other 2

1988 VEHICLE INTERIOR FORM

1. PSU Number 71
2. Case Number 145B
3. Vehicle Number 01

OCCUPANT AREA INTRUSION

Location of Intrusion	Intruding Component	Magnitude of Intrusion	Dominant Crush Direction
47. 13	48. 06	49. 6	50. 2
51. 12	52. 15	53. 5	54. 2
55. 11	56. 15	57. 4	58. 2
59. 13	60. 15	61. 3	62. 2
63. 11	64. 12	65. 3	66. 1
67. 13	68. 10	69. 3	70. 3
71. 13	72. 11	73. 3	74. 3
75. 11	76. 06	77. 2	78. 2
79. 12	80. 12	81. 2	82. 1
83. 13	84. 12	85. 2	86. 1

1988 VEHICLE INTERIOR FORM

1. PSU Number 71
2. Case Number 145B
3. Vehicle Number 01

STEERING COLUMN

87. Steering Column Type 1
88. Steering Column Collapse 98
89. Vertical Movement(+/-) 00
90. Lateral Movement(+/-) 00
91. Longitudinal Movement(+/-) 00
92. Steering Rim/Spoke Deform 0
93. Location of Rim/Spoke Deform 00

INSTRUMENT PANEL

94. Odometer Reading 107,000
95. Instrument Panel Damage 1
96. Knee Bolsters Deformed 8
97. Glove Door Open 8

1988 OCCUPANT ASSESSMENT FORM

1. PSU Number 71
2. Case Number 145B
3. Vehicle Number 01
4. Occupant Number 01

OCCUPANT'S CHARACTERISTICS

5. Age 43 6. Sex 1 7. Height 99 8. Weight 999 9. Role 1
10. Seat Position 11 11. Posture 9

EJECTION/ENTRAPMENT

12. Ejection 2 13. Ejection Area 3 14. Ejection Medium 4
15. Medium Status 2 16. Entrapment 0

1988 OCCUPANT ASSESSMENT FORM

1. PSU Number 71
2. Case Number 145B
3. Vehicle Number 01
4. Occupant Number 01

RESTRAINT SYSTEM AND SEAT EVALUATION

17. Belt System Availability	4	18. Belt System Use	00
19. Proper Use of Belt	0	20. Belt Failure Modes During Impact	0
21. Restraint System Availability	0	22. Restraint Function	0
23. Did Restraint Fail	0	24. Police Reported Restraint Use	0
25. Head Restraint Type/Damage by Occupant at this Position			0
26. Seat Type	08	27. Seat Performance	1

1988 OCCUPANT ASSESSMENT FORM

1. PSU Number 71
2. Case Number 145B
3. Vehicle Number 01
4. Occupant Number 01

CHILD SAFETY SEAT

28. Child/Safety Seat Make/Model	000
29. Type of Child Safety Seat	0
30. Orientation	00
31. Harness	00
32. Shield	00
33. Tether	00

1988 OCCUPANT ASSESSMENT FORM

1. PSU Number 71
2. Case Number 145B
3. Vehicle Number 01
4. Occupant Number 01

INJURY CONSEQUENCES

34. Severity (Police Rating)	4	35. Treatment - Mortality	1
36. Type of Med. Facility (Initial)	0	37. Hospital Stay	00
38. Working Days Lost	62	39. Time to Death	01

MEDICALLY REPORTED CAUSE OF DEATH

40. Cause #1 99 41. Cause #2 00 42. Cause #3 00
43. Number of Recorded Injuries 01

1988 OCCUPANT INJURY FORM

1. PSU NUMBER 71
2. CASE NUMBER 145B
3. VEHICLE NUMBER 01
4. OCCUPANT NUMBER 01

INJURY DATA

SOURCE OF INJURY DATA	BODY REGION	ASPECT	LESION	SYSTEM ORGAN	A.I.S. SEVERITY	INJURY SOURCE	INJURY SOURCE CONFID. LEVEL	DIR./ INDIR. INJURY	OCC. AREA INTR. NO.
01. 8	F	S	L	I	1	97	9	7	99

EC0021 2 If INTRUDING COMPONENT IV48 equals 06, 07, 10, 11 or 13, then at
EC0022 least one (DEFORMATION LOCATION (EV07(n) should equal 9 or
EC0023 blank) or (EV07(n) should equal R or L and LONGITUDINAL LOCATION
EC0024 EV08(n) should equal D, P, Y, or Z)).
VEH NUM = 01 OCCUPANT NUM = 01

HT0051 2 If TREATMENT OA35 equals 1, then at least one A.I.S. SEVERITY
HT0052 OI10(n) should be 2-7.

1988 NATIONAL ACCIDENT SAMPLING SYSTEM

ERROR SUMMARY SCREEN [redacted] 1988

CURRENT VERSION: 1.12

FORM NAME	NUMBER OF DOLLAR SIGNS	NUMBER OF LEVEL 1 ERRORS	NUMBER OF LEVEL 2 ERRORS	VERSION NUMBER CONSISTENT
Accident	0	0	0	Y
General Vehicle	0	0	1	Y
Vehicle Exterior	0	0	0	Y
Vehicle Interior	0	0	0	Y
Occupant Assessment	0	0	0	Y
Occupant Injury	0	0	0	Y
Total Inter Errors		0	2	
Total Case Errors	0	0	3	

```
*****************************************************************************

 GG0191  2  If ALCOHOL TEST GV12 equals 05-49, then ALCOHOL/DRUG PRESENCE
 GG0192     GV11 should equal 1, 3 or 4.

*****************************************************************************

*****************************************************************************

*****************************************************************************

*****************************************************************************

*****************************************************************************

71145B00000001[redacted]8881.1310000000000121190000003[redacted]88[redacted]88
71145B00010012[redacted]8881.1310000000000114N3100N
71145B00020012[redacted]8881.1310000000000114F42000
71145B00030012[redacted]8881.1310000000000114L42000
71145B01000021      1.13 00000100081124742 11FTHE3468BHA[redacted]199729550106101010440100020099799759 99 99999901
71145B01000031      1.13 000000000013100FRA009024200FDGW09075000000000119 000                    111380
71145B01000041      1.13 00000000098130330000026680086000000001220000212200002
71145B01000042      1.13 0000000001306621215521115421315321112311310331311331106221212211312211 98 00 00 00000107188
71145B01010051      1.13 00000000043199999111923420400000000008100000000000041000620199000003
71145B01010161      1.13 0000000002UUUU7979700
71145B01010261      1.13 0000000002UUUU7979700
71145B01010361      1.13 0000000008FSLI1979700
71145B88888888[redacted]881.121000000000YY0101YYY0101Y000000000000000000000000000000000000000000
71145B99999999[redacted]881.121000000000000000000000000100000000000000000000000000000000000000000000
                  1988 NATIONAL ACCIDENT SAMPLING SYSTEM
```

ERROR SUMMARY SCREEN [redacted], 1989

CURRENT VERSION: 1.13

FORM NAME	NUMBER OF DOLLAR SIGNS	NUMBER OF LEVEL 1 ERRORS	NUMBER OF LEVEL 2 ERRORS	VERSION NUMBER CONSISTENT
Accident	0	0	0	Y
General Vehicle	0	0	1	Y
Vehicle Exterior	0	0	0	Y
Vehicle Interior	0	0	0	Y
Occupant Assessment	0	0	0	Y
Occupant Injury	0	0	0	Y
Total Inter Errors		0	1	
Total Case Errors	0	0	2	

U.S. Department of Transportation
National Highway Traffic Safety Administration

SLIDE INDEX

NATIONAL ACCIDENT SAMPLING SYSTEM
CRASHWORTHINESS DATA SYSTEM

Primary Sampling Unit Number 71 Case Number–Stratum 1450

Slide No.	Vehicle No.	Direction of Picture	Description of Slide Subject Matter
1-3	1	W	Forward travel V1
4-6	1	SW	V1 exits left side of roadway
7-8	1	W to S	V1 goes up roadside embankment
9-10	1	W	V1 becomes airborn (#9 End LF)
11-12	1	W	V1 Impacts ground (gouge) 1st POI, + tree (2nd POI), Approx final rest
13	1	S	V1 rolls back onto wheels strikes 2nd tree (3rd POI)
14	1	E	reverse Final rest
15	1	E	" V1 airborn
16-17	1	E	" End LF, V1 goes up embankment
18-20	1	E	" V1 exits left roadside
21-22	1	E	" Forward travel
23-58	1	–	Exterior V1
25-40	1	–	1st POI w/ ground
47-51	1	–	3rd POI w/ tree
53-56	1	–	2nd POI w/ tree
57-66	1	–	Interior V1
66	1	–	nonspecified type steer column

slide #11 spray can indicates original position of rock

slide #11 spray can indicates original position of rock

HS Form 434B
1/88

Slide No.	Vehicle No.	Direction of Picture	Description of Slide Subject Matter

PSU 71-145B (1988) #1

PSU 71-145B (1988) #2

PSU 71-145B (1988) #3

PSU 71-145B (1988) #4

PSU 71-145B (1988) #5

PSU 71-145B (1988) #6

PSU 71-145B (1988) #7

PSU 71-145B (1988) #8

PSU 71-145B (1988) #9

PSU 71-145B (1988) #10

PSU 71-145B (1988) #11

PSU 71-145B (1988) #12

PSU 71-145B (1988) #13

PSU 71-145B (1988) #14

PSU 71-145B (1988) #15

PSU 71-145B (1988) #16

PSU 71-145B (1988) #17

PSU 71-145B (1988) #18

PSU 71-145B (1988) #19

PSU 71-145B (1988) #20

PSU 71-145B (1988) #21

PSU 71-145B (1988) #22

PSU 71-145B (1988) #23

PSU 71-145B (1988) #24

PSU 71-145B (1988) #25

PSU 71-145B (1988) #26
Best Available

PSU 71-145B (1988) #27
Best Available

PSU 71-145B (1988) #28

PSU 71-145B (1988) #29

PSU 71-145B (1988) #30

PSU 71-145B (1988) #31
Best Available

PSU 71-145B (1988) #32

PSU 71-145B (1988) #33

PSU 71-145B (1988) #34

PSU 71-145B (1988) #35

PSU 71-145B (1988) #36

PSU 71-145B (1988) #37

PSU 71-145B (1988) #38

PSU 71-145B (1988) #39

PSU 71-145B (1988) #40

PSU 71-145B (1988) #41

PSU 71-145B (1988) #42

PSU 71-145B (1988) #43

PSU 71-145B (1988) #44

PSU 71-145B (1988) #45

PSU 71-145B (1988) #46

PSU 71-145B (1988) #47

PSU 71-145B (1988) #48

PSU 71-145B (1988) #49

PSU 71-145B (1988) #50

PSU 71-145B (1988) #51

PSU 71-145B (1988) #52

PSU 71-145B (1988) #53

PSU 71-145B (1988) #54

PSU 71-145B (1988) #55

PSU 71-145B (1988) #56

PSU 71-145B (1988) #57

PSU 71-145B (1988) #58

PSU 71-145B (1988) #59

PSU 71-145B (1988) #60

PSU 71-145B (1988) #61

PSU 71-145B (1988) #62

PSU 71-145B (1988) #63

PSU 71-145B (1988) #64

PSU 71-145B (1988) #65

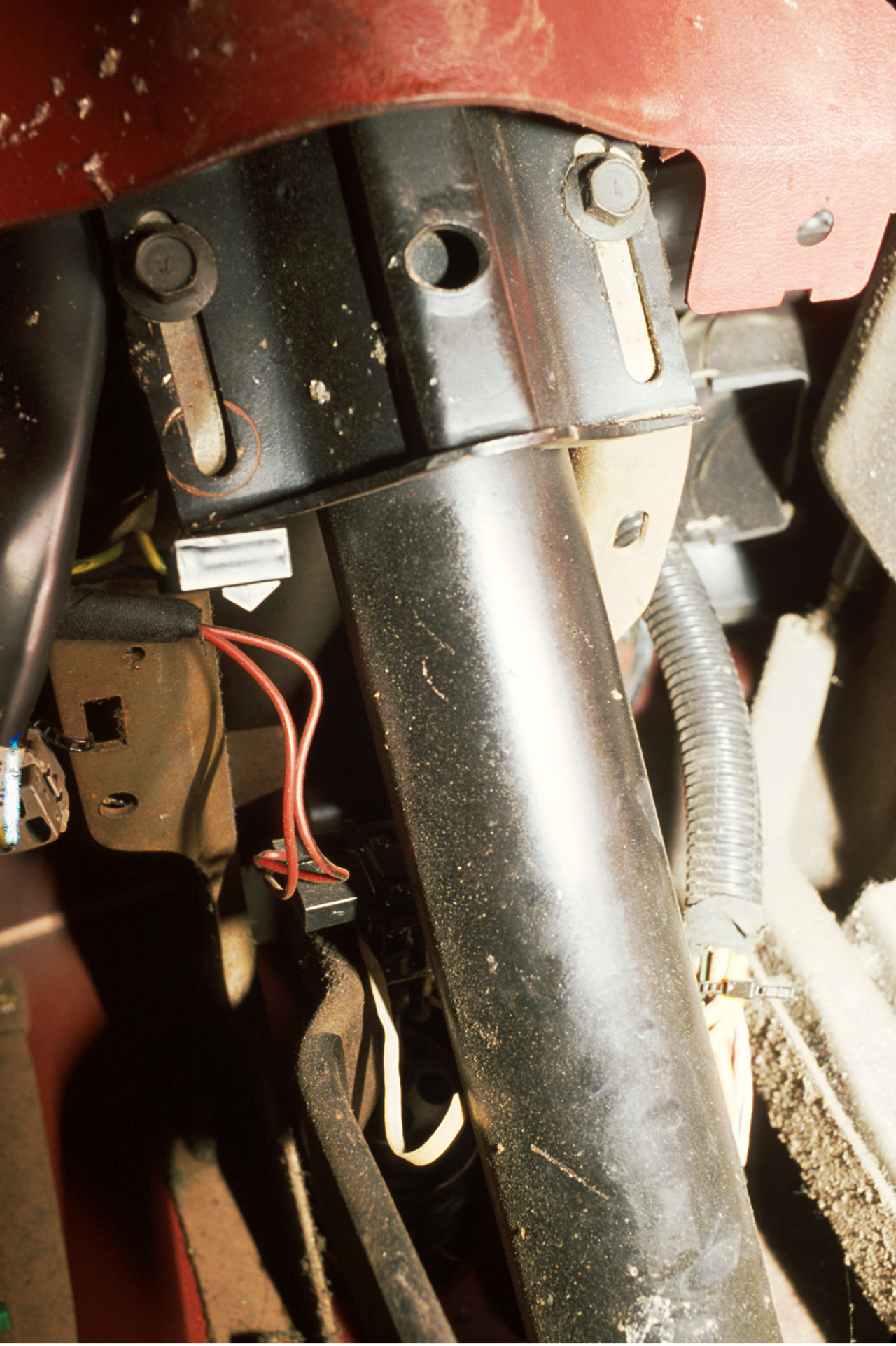

PSU 71-145B (1988) #66