U.S. Department
of Transportation

**National Highway
Traffic Safety
Administration**

400 Seventh Street, S.W.
Washington, D.C. 20590

Dear Crash Data Researchers/Users:

Thank you for choosing crash data from the National Highway Traffic Safety Administration (NHTSA) for your research or other use. The information contained in this motor vehicle crash report is collected, maintained and distributed in accordance with Public Law 89-564. In accordance with this Public Law, NHTSA is required not to release any case information until completion of quality control procedures. These procedures include a review of the case material to extract all names, licenses and registration numbers, non-coded interview material, non-research related researcher comments in the margins, non-factual data, and the production number portion of the vehicle identification number (VIN).

If you requested NHTSA to query its database files in order to identify a specific crash, then that query was made using non-personal descriptors you provided for use in our search. This motor vehicle crash may have been identified from a data search and matches the general, non-personal descriptors you provided, but we cannot confirm that this is the specific crash report you requested.

If you have any questions with regard to the above procedures, please contact the Field Operations Branch, Crash Investigation Division, National Center for Statistics and Analysis at 202-366-4820. Again, please be advised that we cannot confirm that this is the case that you have specifically requested nor can we certify the information to be correct.

*** *** ***

Get it together!
SAFETY BELTS SAVE LIVES

AUTO SAFETY HOTLINE
(800) 424-9393
Wash. D.C. Area 366-0123

BEST AVAILABLE

U.S. Department of Transportation
National Highway Traffic Safety Administration

CASE SUMMARY

NATIONAL ACCIDENT SAMPLING SYSTEM
CRASHWORTHINESS DATA SYSTEM

PSU 42 CASE NO. 080A TYPE OF ACCIDENT Intersection type, vehicle to vehicle

A. DESCRIPTION OF THE ACCIDENT SEQUENCE AND ACCIDENT PECULIARITIES

(Provide a summary of the accident sequence as well as any particular event of the accident that is noteworthy. Injury mechanism and vehicle crashworthiness is the focus, not driver culpability. Do not include any personal identifiers. Use reverse side if needed.)

Vehicle #1 was southbound. Vehicle #2 was eastbound. Vehicle #3 was stopped at light facing northbound. Vehicle #1 failed to yield to red light and entered intersection striking vehicle #2 on left side. After impact vehicle #2 rotated 180° and struck a light pole on south east corner with its rear end. Vehicle #1 rotated 270° counterclockwise and struck stationary vehicle #3 with it's left side. Vehicle #1 then rotated to its final rest point on roadway. Vehicle #3 rotated about 150° and struck a light pole with it's front end.

B. VEHICLE PROFILE(S)

Vehicle No.	Class of Vehicle	Year/Make/Model	Most Severe Damage		Component Failure
			Damage Plane	Severity Description	
01	Compact	1990 Buick Skylark	Front	Severe	None
02	Intermediate	1990 Nissan Maxima	Left	Severe	None
03	Subcompact	1990 Toyota Corolla	Front	Severe	None

C. PERSON PROFILE(S)

Vehicle No.	Person Role	Seat Position	Restraint Use	Most Severe Injury			
				Body Region	Lesion	AIS	Injury Source
01	Driver	Left front	Lap and shoulder				
02	Driver	Left front	None				
02	Passenger	Right front	None				
02	Passenger	Right rear	None				
03	Driver	Left front	Lap and shoulder				

DO NOT SANITIZE THIS FORM

U.S. Department of Transportation
National Highway Traffic Safety Administration

NATIONAL ACCIDENT SAMPLING SYSTEM
CRASHWORTHINESS DATA SYSTEM

ACCIDENT COLLISION DIAGRAM

PSU No. 42
Case Number – Stratum 080A

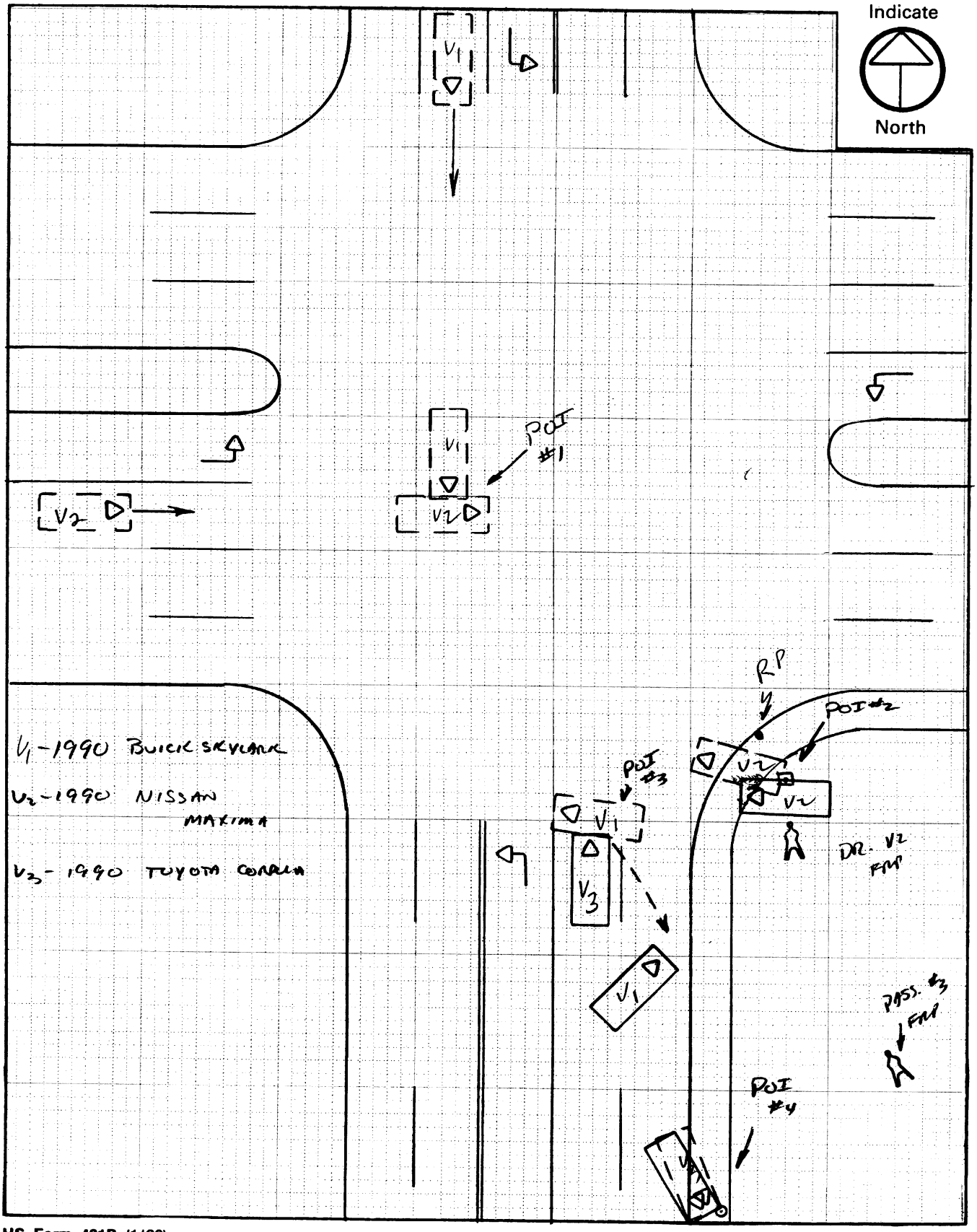

HS Form 431B (1/90)

U.S. Department of Transportation
National Highway Traffic Safety Administration

NATIONAL ACCIDENT SAMPLING SYSTEM
CRASHWORTHINESS DATA SYSTEM

ACCIDENT COLLISION DIAGRAM

PSU No. 4 2

Case Number–Stratum 0 8 0 A

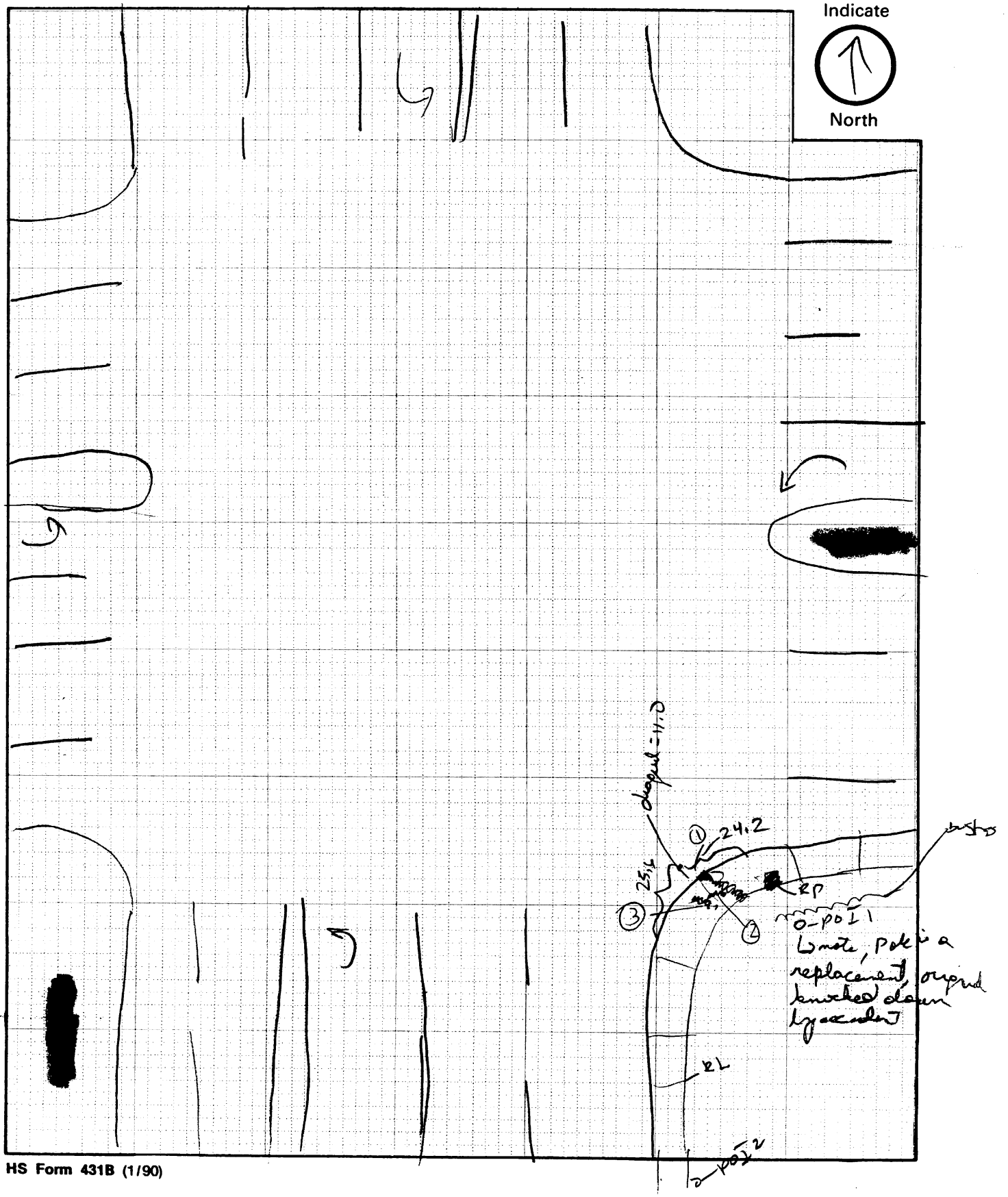

HS Form 431B (1/90)

U.S. Department of Transportation
National Highway Traffic Safety Administration

ACCIDENT COLLISION MEASUREMENT TABLE

NATIONAL ACCIDENT SAMPLING SYSTEM
CRASHWORTHINESS DATA SYSTEM

Primary Sampling Unit Number 42 Case Number – Stratum 0 8 0 A

ACCIDENT COLLISION DIAGRAM

LEVEL I
PHYSICAL EVIDENCE ABSENT

To be accomplished when there is no physical evidence present at the scene:

*approximate vehicle orientation at impact and final rest

*applicable road/roadway delineation (e.g., curbs/edge lines, lane markings, median markings, pavement markings, etc.)

*applicable traffic controls (e.g., speed limit)

*north arrow placed on diagram

*sketch required

LEVEL II
PHYSICAL EVIDENCE PRESENT

In addition to the Level I tasks noted above, the following must be

LEVEL II (Cont'd)
accomplished when physical evidence is present:

*document reference point and reference line relative to physical features present at the scene

*scaled documentation of all accident induced physical evidence

*scaled documentation of all roadside objects contacted

*roadway surface type and condition of applicable roadways

*grade measurements for all applicable roadways

*scaled representations of the vehicle(s) at pre-impact, impact, and final rest based upon either:

a) physical evidence, or

b) reconstructed accident dynamics

CRASH DATA

	VEH. #1	VEH. #2	VEH. #3
Heading Angle			
Surface Type			
Surface Condition			
Grade Measurement (v/h)			

Reference Point: Power pole [redacted] SE wing 1.4 dia

Reference Line: E edge sidewalk 5'7" wide

Item	Distance and Direction from Reference Point	Distance and Direction from Reference Line
RP	0 ~~9'6" E~~	9.6E
RL		
Begin mark 1	7'9" S	4" W
Begin mark 2	8'6" S	3'3" E
Begin mark 3	10'9" S	~~8~~ 11" E
end 1	6'7" S	5'7E } end sidewalk
end 2	6'7" S	5'7E } end sidewalk
end 3	9'9" S	2'1" E
POI 1 base dia 2.0 pole dia 10"	7'6" S	13.9 E
POI 2 base dia 1'6"	7'1' 3" S	10" W

HS Form 431A (1/90)

Item	Distance and Direction from Reference Point	Distance and Direction from Reference Line

[redacted]

U.S. Department of Transportation
National Highway Traffic Safety Administration

EXTERIOR VEHICLE FORM

NATIONAL ACCIDENT SAMPLING SYSTEM
CRASHWORTHINESS DATA SYSTEM

1. Primary Sampling Unit Number: 42	3. Vehicle Number: 01
2. Case Number – Stratum: 080 A	

VEHICLE IDENTIFICATION

VIN 1G4NV54U1LM[redacted] Model Year 1990

Vehicle Make (specify): Buick Vehicle Model (specify): Skylark

LOCATOR

Locate the end of the damage with respect to the vehicle longitudinal center line or bumper corner for end impacts or an undamaged axle for side impacts.

Specific Impact No.	Location of Direct Damage	Location of Field L	Location of Maximum Crush
01	Entire front	Entire front	C1
02	Begins 82.5" forw. of R axle (extends to rear)	Begins 109.2" forw. of R axle	

CRUSH PROFILE

NOTES: Identify the plane at which the C-measurements are taken (e.g., at bumper, above bumper, at sill, above sill, etc.) and label adjustments (e.g., free space).

Measure C1 to C6 from driver to passenger side in front or rear impacts and rear to front in side impacts.

Free space value is defined as the distance between the baseline and the original body contour taken at the individual C locations. This may include the following: bumper lead, bumper taper, side protrusion, side taper, etc. Record the value for each C-measurement and maximum crush.

Use as many lines/columns as necessary to describe each damage profile.

Specific Impact Number	Plane of C-Measurements	Direct Damage Width (CDC)	Direct Damage Max Crush	Field L	C_1	C_2	C_3	C_4	C_5	C_6	±D
01	Front bumper	62.0"	C1	47.0	30.5	24.0	20.6	19.7	18.0	18.5	00
	Free Space?										
	Actual Crush										
2	Mid door	36.0"		62.7	11.0	17.0	20.0	19.6	Tire	2.0	
–	Stnd. adj.										
–	Free space										

HS Form 435A (Rev. 1/90)

Taken to bumper supports (bumper off.)
Field L

VEHICLE DAMAGE SKETCH

TIRE—WHEEL DAMAGE

a. Rotation physically restricted		b. Tire deflated	
RF	1	RF	1
LF	1	LF	2
RR	2	RR	2
LR	2	LR	2

(1) Yes (2) No (8) NA (9) Unk.

TYPE OF TRANSMISSION

☐ Manual ☑ Automatic

ORIGINAL SPECIFICATIONS

Wheelbase	103.4
Overall Length	180.0
Maximum Width	66.6
Curb Weight	2625
Average Track	55.6 / 55.2
Front Overhang	
Rear Overhang	
Engine Size: cyl./ displ.	4cl / 2.5l
Undeformed End Width	

WHEEL STEER ANGLES
(For locked front wheels or displaced rear axles only)

RF ± ___ ___ ° see sl/rdg
LF ± 0 0 °
RR ± ___ ___ °
LR ± ___ ___ °

Within ±5 degrees

DRIVE WHEELS

☑ FWD ☐ RWD ☐ 4WD

Approximate Cargo Weight 0.0

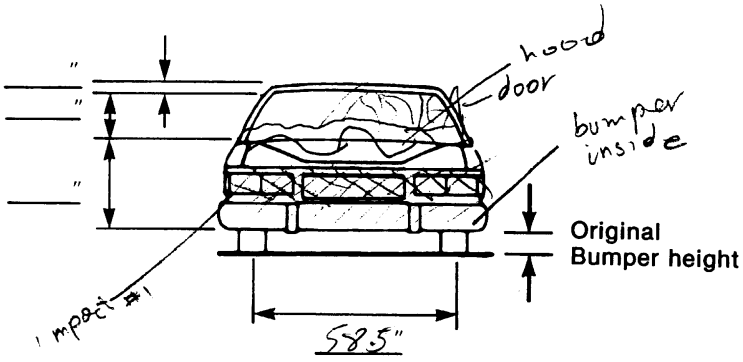

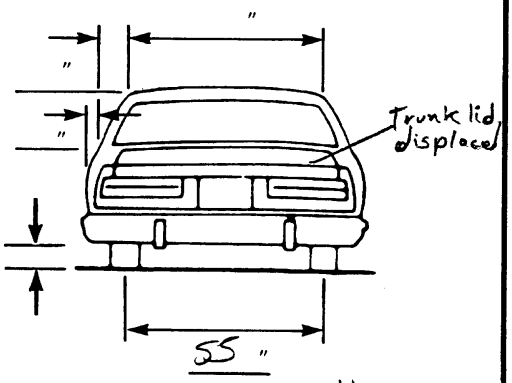

Stringline for POT #2 set at 38" from half width stand adj. req.

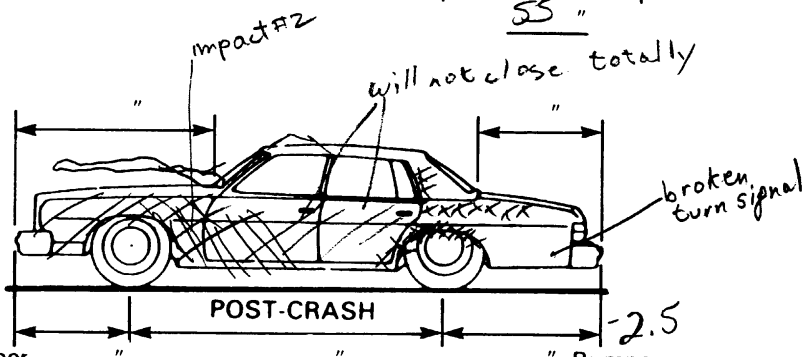

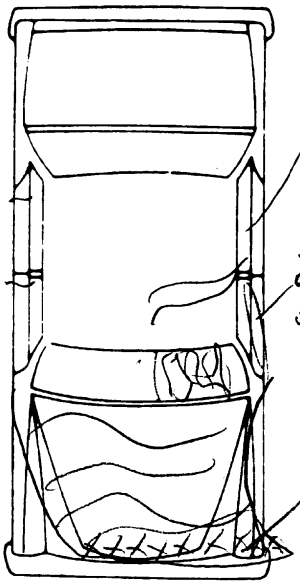

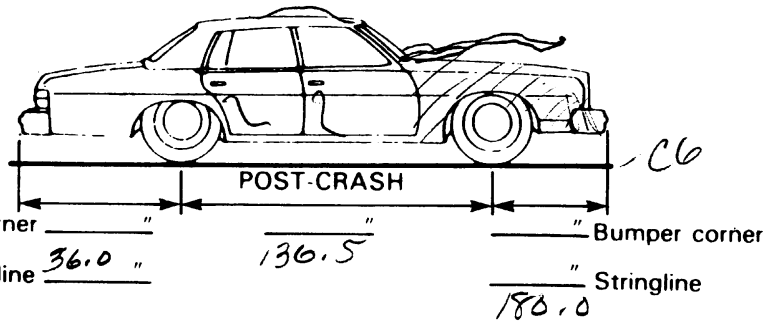

NOTES: Sketch new perimeter and cross hatch direct damage and single hatch induced damage on all views. Annotate observations which might be useful in reconstructing the accident (e.g., grass in tire bead, direction of striations, scuff on sidewall, etc.). If pulling trailer, sketch type of trailer and damage received on the back of this page.
Annotate any damage caused by extrication such as component removal by torching, prying, or hydraulic shears.

CDC WORKSHEET

CODES FOR OBJECT CONTACTED

01-30—Vehicle Number

Noncollision
- (31) Overturn—rollover
- (32) Fire or explosion
- (33) Jackknife
- (34) Other intraunit damage (specify): _____
- (35) Noncollision injury
- (38) Other noncollision (specify): _____
- (39) Noncollision—details unknown

Collision with Fixed Object
- (41) Tree (≤4 inches in diameter)
- (42) Tree (>4 inches in diameter)
- (43) Shrubbery or bush
- (44) Embankment
- (45) Breakaway pole or post (any diameter)

Nonbreakaway Pole or Post
- (50) Pole or post (≤4 inches in diameter)
- (51) Pole or post (>4 but ≤12 inches in diameter)
- (52) Pole or post (>12 inches in diameter)
- (53) Pole or post (diameter unknown)
- (54) Concrete traffic barrier
- (55) Impact attenuator
- (56) Other traffic barrier (specify): _____
- (57) Fence
- (58) Wall
- (59) Building
- (60) Ditch or Culvert
- (61) Ground
- (62) Fire hydrant
- (63) Curb
- (64) Bridge
- (68) Other fixed object (specify): _____
- (69) Unknown fixed object

Collision With Nonfixed Object
- (71) Motor vehicle not in transport
- (72) Pedestrian
- (73) Cyclist or cycle
- (74) Other nonmotorist or conveyance (specify): _____
- (75) Vehicle occupant
- (76) Animal
- (77) Train
- (78) Trailer, disconnected in transport
- (88) Other nonfixed object (specify): _____
- (89) Unknown nonfixed object

- (98) Other event (specify): _____
- (99) Unknown event or object

DEFORMATION CLASSIFICATION BY EVENT NUMBER

Accident Event Sequence Number	Object Contacted	(1) (2) Direction of Force (degrees)	Incremental Value of Shift	(3) Deformation Location	(4) Specific Longitudinal or Lateral Location	(5) Specific Vertical or Lateral Location	(6) Type of Damage Distribution	(7) Deformation Extent
01	02	030	—	F	D	E	W	03
02	03	270	00	L	Y	E	W	99
03	31	000	00	L	Z	A	O	02

U.S. Department of Transportation
National Highway Traffic Safety Administration

INTERIOR VEHICLE FORM

NATIONAL ACCIDENT SAMPLING SYSTEM
CRASHWORTHINESS DATA SYSTEM

1. Primary Sampling Unit Number 42
2. Case Number—Stratum 080A
3. Vehicle Number 01

INTEGRITY

4. Passenger Compartment Integrity 00

(00) No integrity loss

Yes, Integrity Was Lost Through
(01) Windshield
(02) Door (side)
(03) Door/hatch (rear)
(04) Roof
(05) Roof glass
(06) Side window
(07) Rear window
(08) Roof and roof glass
(09) Windshield and door (side)
(10) Windshield and roof
(11) Side and rear window
(12) Windshield and side window
(13) Door and side window
(98) Other combination of above (specify): _____
(99) Unknown

Door, Tailgate Or Hatch Opening

5. LF 3 6. RF 1 7. LR 3 8. RR 1 9. TG/H 0

(0) No door/gate/hatch
(1) Door/gate/hatch remained closed and operational
(2) Door/gate/hatch came open during collision
(3) Door/gate/hatch jammed shut
(8) Other (specify): _____
(9) Unknown

Damage/Failure Associated with Door, Tailgate or Hatch Opening in Collision. If IV05-IV09 ≠ 2, Then Code 0.

10. LF 0 11. RF 0 12. LR 0 13. RR 0 14. TG/H 0

(0) No door/gate/hatch or door not opened

Door, Tailgate, or Hatch Came Open During Collision
(1) Door operational (no damage)
(2) Latch/striker failure due to damage
(3) Hinge failure due to damage
(4) Door structure failure due to damage
(5) Door support (i.e., pillar, sill, roof side rail, etc.) failure due to damage
(6) Latch/striker and hinge failure due to damage
(8) Other failure (specify): _____
(9) Unknown

GLAZING

Glazing Damage from Impact Forces

15. WS 2 16. LF 0 17. RF 0 18. LR 0 19. RR 0
20. BL 0 21. Roof 8 22. Other 0

(0) No glazing damage from impact forces
(2) Glazing in place and cracked from impact forces
(3) Glazing in place and holed from impact forces
(4) Glazing out-of-place (cracked or not) and not holed from impact forces
(5) Glazing out-of-place and holed from impact forces
(6) Glazing disintegrated from impact forces
(7) Glazing removed prior to accident
(8) No glazing
(9) Unknown if damaged

Glazing Damage from Occupant Contact

23. WS 0 24. LF 1 25. RF 0 26. LR 0 27. RR 0
28. BL 0 29. Roof 0 30. Other 0

(0) No occupant contact to glazing or no glazing
(1) Glazing contacted by occupant but no glazing damage
(2) Glazing in place and cracked by occupant contact
(3) Glazing in place and holed by occupant contact
(4) Glazing out-of-place (cracked or not) by occupant contact and not holed by occupant contact
(5) Glazing out-of-place by occupant contact and holed by occupant contact
(6) Glazing disintegrated by occupant contact
(9) Unknown if contacted by occupant

If No Glazing Damage ***And*** No Occupant Contact or No Glazing, Then Code IV 31 Through IV 46 As 0

Type of Window/Windshield Glazing

31. WS 1 32. LF 2 33. RF 0 34. LR 0 35. RR 0
36. BL 0 37. Roof 0 38. Other 0

(0) No glazing contact and no damage, or no glazing
(1) AS-1 — Laminated
(2) AS-2 — Tempered
(3) AS-3 — Tempered-tinted
(4) AS-14 — Glass/Plastic
(8) Other (specify): _____
(9) Unknown

Window Precrash Glazing Status

39. WS 1 40. LF 2 41. RF 0 42. LR 0 43. RR 0
44. BL 0 45. Roof 0 46. Other 0

(0) No glazing contact and no damage, or no glazing
(1) Fixed
(2) Closed
(3) Partially opened
(4) Fully opened
(9) Unknown

INTRUSION WORK SHEET

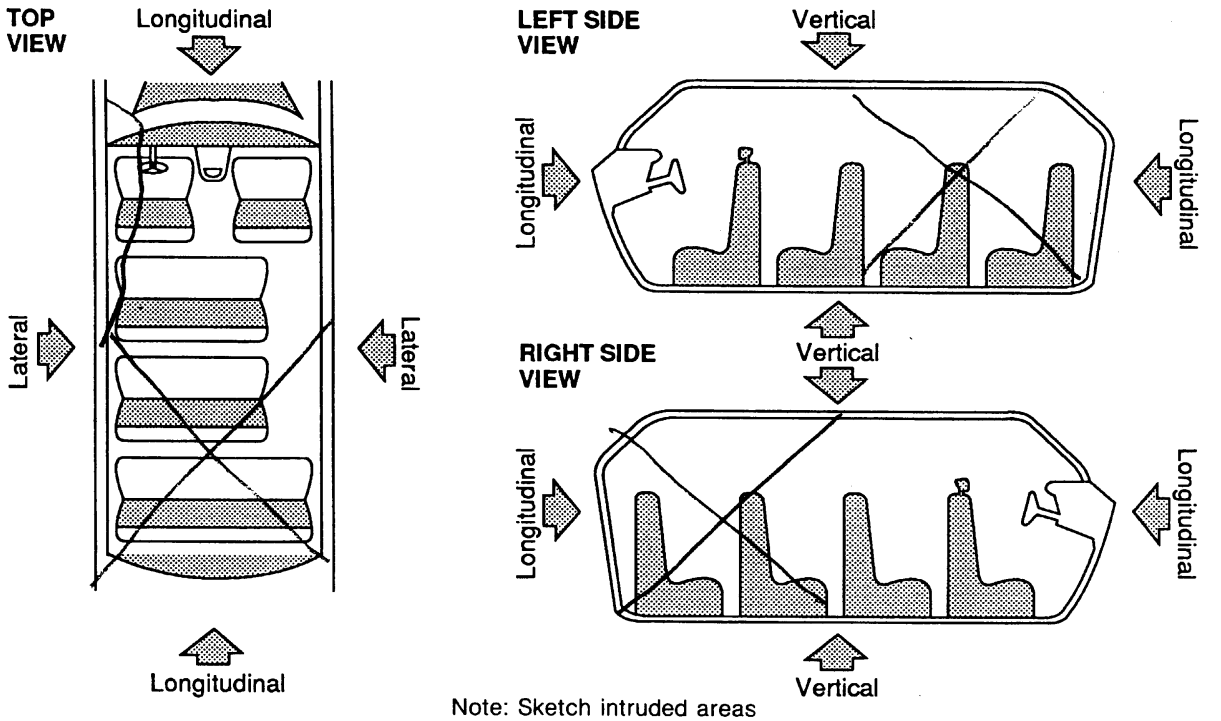

Note: Sketch intruded areas

LOCATION OF INTRUSION	INTRUDED COMPONENT	COMPARISION VALUE	–	INTRUDED VALUE	=	INTRUSION	DOMINANT CRUSH DIRECTION
11	Side panel forward of A-Pillar		–	44.2	=		lat
11	Inst. panel		–	46.8	=		
11	Floor pan		–	43.7	=		
11	Seat cushion		–	40.5	=		
11	Door panel		–	39.7	=		
11	A Pillar		–	46.5	=		
11	B " "		–	46.4	=		
11	Steering assembly		–	35.7	=		
~~12~~	~~Seat cushion~~		–	~~26.4~~	=		
13	" "		–	20.0	=		
13	Center Console R		–	26.4	=		
21	Door panel		–	49.2	=		
			–		=		
			–		=		
			–		=		

Document no more than the 15 most severe intrusions

Rt - R side interior sill

OCCUPANT AREA INTRUSION

Note: If no intrusions, leave variables IV 47-IV 86 blank.

	Location of Intrusion	Intruding Component	Magnitude of Intrusion	Dominant Crush Direction
1st	47. 11	48. 01	49. 2	50. 3
2nd	51. 11	52. 10	53. 2	54. 3
3rd	55. 11	56. 24	57. 2	58. 3
4th	59. 11	60. 17	61. 1	62. 3
5th	63. 11	64. 02	65. 1	66. 3
6th	67. 11	68. 27	69. 1	70. 3
7th	71. 11	72. 06	73. 1	74. 3
8th	75. 11	76. 07	77. 1	78. 3
9th	79. 13	80. 24	81. 1	82. 3
10th	83. 21	84. 25	85. 1	86. 3

LOCATION OF INTRUSION

Front Seat
- (11) Left
- (12) Middle
- (13) Right

Second Seat
- (21) Left
- (22) Middle
- (23) Right

Third Seat
- (31) Left
- (32) Middle
- (33) Right

Fourth Seat
- (41) Left
- (42) Middle
- (43) Right

- (97) Catastrophic
- (98) Other enclosed area (specify): _____
- (99) Unknown

INTRUDING COMPONENT

Interior Components
- (01) Steering assembly
- (02) Instrument panel left
- (03) Instrument panel center
- (04) Instrument panel right
- (05) Toe pan
- (06) A-pillar
- (07) B-pillar
- (08) C-pillar
- (09) D-pillar
- (10) Door panel
- (12) Roof (or convertible top)
- (13) Roof side rail
- (14) Windshield
- (15) Windshield header
- (16) Window frame
- (17) Floor pan
- (18) Backlight header
- (19) Front seat back
- (20) Second seat back
- (21) Third seat back
- (22) Fourth seat back
- (23) Fifth seat back
- (24) Seat cushion
- (25) Back panel or door surface
- (26) Other interior component (specify): _____
- (27) Side panel - forward of the A-pillar
- (28) Side panel - rear of the A-pillar

Exterior Components
- (30) Hood
- (31) Outside surface of vehicle (specify): _____
- (32) Other exterior object in the environment (specify): _____
- (33) Unknown exterior object
- (97) Catastrophic
- (98) Intrusion of unlisted component(s) (specify): _____
- (99) Unknown

MAGNITUDE OF INTRUSION
- (1) ≥ 1 inch but < 3 inches
- (2) ≥ 3 inches but < 6 inches
- (3) ≥ 6 inches but < 12 inches
- (4) ≥ 12 inches but < 18 inches
- (5) ≥ 18 inches but < 24 inches
- (6) ≥ 24 inches
- (7) Catastrophic
- (9) Unknown

DOMINANT CRUSH DIRECTION
- (1) Vertical
- (2) Longitudinal
- (3) Lateral
- (7) Catastrophic
- (9) Unknown

STEERING COLUMN WORKING DIAGRAMS

STEERING COLUMN COLLAPSE

Steering Column Shear Module Movement

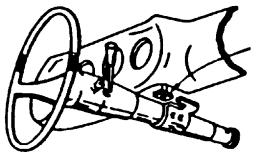

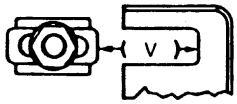

Left ____

Right ____ V = _____"

Direction and Magnitude of Steering Column Movement

Can't determine due to severe intrusion can't access

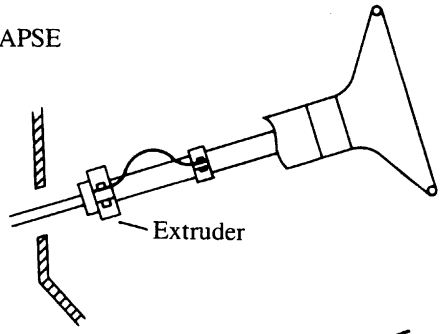

After Compression

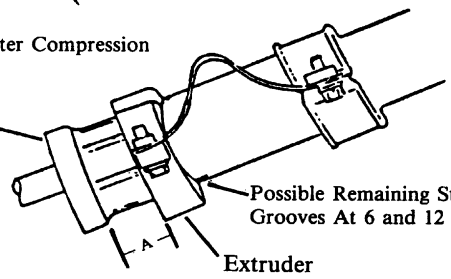

Compression = Measurement A A = _____

STEERING COLUMN MOVEMENT

Vertical Movement

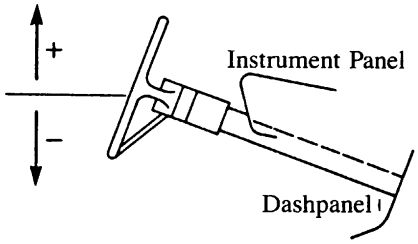

Lateral Movement

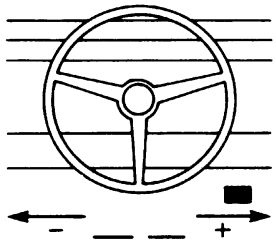

Longitudinal Movement

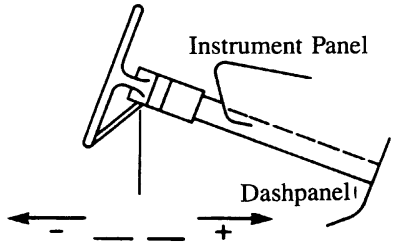

	COMPARISON VALUE	–	DAMAGED VALUE	=	MOVEMENT
VERTICAL W5 header		–	13.5	=	
LATERAL R A-Pillar		–	36.0	=	
LONGITUDINAL R-B pillar diag.		–	43.7	=	

STEERING RIM/SPOKE DEFORMATION

COMPARISON VALUE	–	DAMAGED VALUE	=	DEFORMATION
	–		=	Ø
	–		=	

STEERING COLUMN

87. Steering Column Type 2
(1) Fixed column
(2) Tilt column
(3) Telescoping column
(4) Tilt and telescoping column
(8) Other column type (specify): _____
(9) Unknown

If PDOF ≠ 11, 12 or 1, Then Code IV88-IV91 As 96

88. Steering Column Collapse Due to Occupant Loading 99
_____ Code actual measured movement to the nearest inch. See coding manual for measurement technique(s).
(00) No movement, compression, or collapse
(01-19) Actual measured value
(20) 20 inches or greater

Estimated movement from observation
(81) Less than 1 inch
(82) ≥ 1 inch but < 2 inches
(83) ≥ 2 inches but < 4 inches
(84) ≥ 4 inches but < 6 inches
(85) ≥ 6 inches but < 8 inches
(86) Greater than or equal to 8 inches
(96) Not assessed (PDOF ≠ 11, 12, 1)
(97) Apparent movement, value undetermined or cannot be measured or estimated
(98) Nonspecified type column
(99) Unknown

Direction And Magnitude of Steering Column Movement

89. Vertical Movement ± 99

90. Lateral Movement ± 99

91. Longitudinal Movement ± 99

Code the actual measured movement to the nearest inch. See Coding Manual for measurement technique(s)
(00) No steering column movement
(±01—±49) Actual measured value
(±50) 50 inches or greater

Estimated movement from observation
(±81) ≥ 1 inch but < 3 inches
(±82) ≥ 3 inches but < 6 inches
(±83) ≥ 6 inches but < 12 inches
(±84) ≥ 12 inches
(__96) Not assessed (PDOF ≠ 11, 12, 1)
(__97) Apparent movement > 1 inch but cannot be measured or estimated
(__99) Unknown

92. Steering Rim/Spoke Deformation 0
_____ Code actual measured deformation to the nearest inch. not up or down inward
(0) No steering rim deformation
(1-5) Actual measured value
(6) 6 inches or more
(8) Observed deformation cannot be measured
(9) Unknown

93. Location of Steering Rim/Spoke Deformation 06
(00) No steering rim deformation

Quarter Sections
(01) Section A
(02) Section B
(03) Section C
(04) Section D

Half Sections
(05) Upper half of rim/spoke
(06) Lower half of rim/spoke
(07) Left half of rim/spoke
(08) Right half of rim/spoke

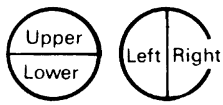

(09) Complete steering wheel collapse
(10) Undetermined location
(99) Unknown

INSTRUMENT PANEL

94. Odometer Reading 018,000
17731 miles—Code mileage to the nearest 1,000 miles
(000) No odometer
(001) Less than 1,500 miles
(300) 299,500 miles or more
(999) Unknown
Source: [redacted]

95. Instrument Panel Damage from Occupant Contact? 1
(0) No
(1) Yes
(9) Unknown

96. Knee Bolsters Deformed from Occupant Contact? 8
(0) No
(1) Yes
(8) Not present
(9) Unknown

97. Did Glove Compartment Door Open During Collision(s)? 1
(0) No
(1) Yes
(8) Not present
(9) Unknown

VEHICLE INTERIOR SKETCHES

Note area of ejection/entrapment

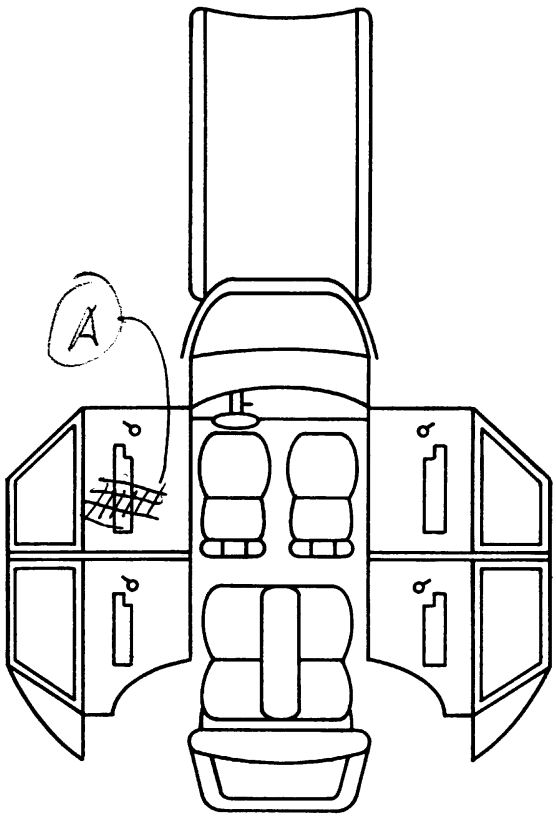

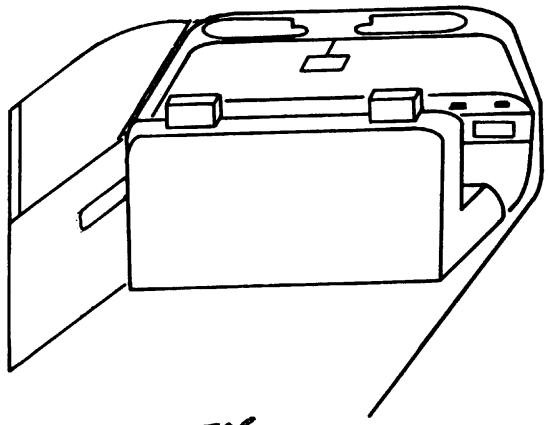

Note: see slides for clarification of Rim

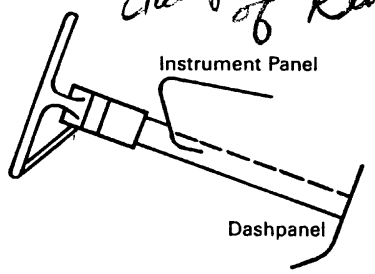

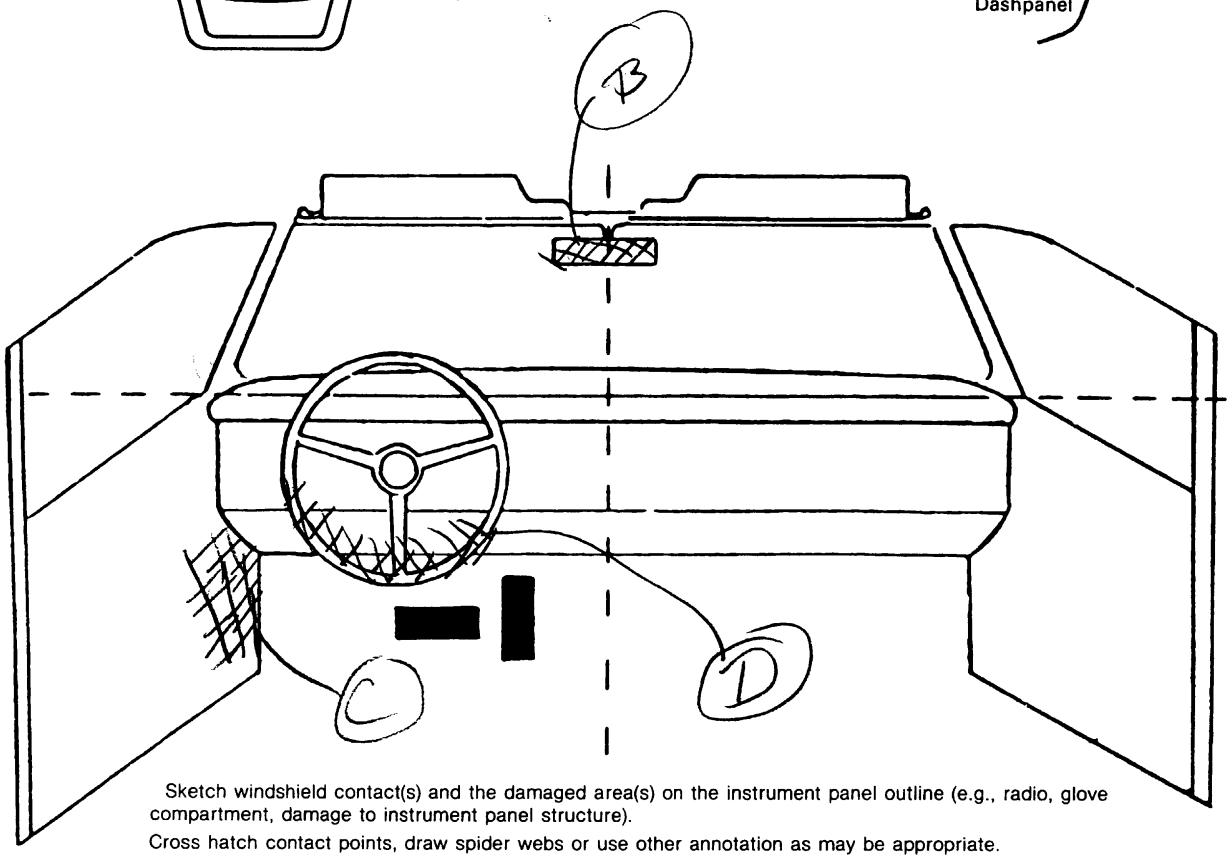

Sketch windshield contact(s) and the damaged area(s) on the instrument panel outline (e.g., radio, glove compartment, damage to instrument panel structure).

Cross hatch contact points, draw spider webs or use other annotation as may be appropriate.

Annotate the contacted area with a letter (begin with A) and list on the Points of Occupant Contact page.

POINTS OF OCCUPANT CONTACT

Contact	Interior Component Contacted	Occupant No. If Known	Body Region If Known	Supporting Physical Evidence	Confidence Level of Contact Point
A	20	01	Up. torso	scuffs + scrapes	1
B	02	01	Head	Cracked + oil smudge	1
C	27	01	Belt	intended + cracked	2
D	04	01	Knee	bent in towards hub	2
E					
F					
G					
H					
I					
J					
K					
L					
M					
N					

CODES FOR INTERIOR COMPONENTS

FRONT
- (01) Windshield
- (02) Mirror
- (03) Sunvisor
- (04) Steering wheel rim
- (05) Steering wheel hub/spoke
- (06) Steering wheel (combination of codes 04 and 05)
- (07) Steering column, transmission selector lever, other attachment
- (08) Add on equipment (e.g., CB, tape deck, air conditioner)
- (09) Left instrument panel and below
- (10) Center instrument panel and below
- (11) Right instrument panel and below
- (12) Glove compartment door
- (13) Knee bolster
- (14) Windshield including one or more of the following: front header, A-pillar, instrument panel, mirror,or steering assembly (driver side only)
- (15) Windshield including one or more of the following: front header, A-pillar, instrument panel, or mirror (passenger side only)
- (16) Other front object (specify): _____

LEFT SIDE
- (20) Left side interior surface, excluding hardware or armrests
- (21) Left side hardware or armrest
- (22) Left A pillar
- (23) Left B pillar
- (24) Other left pillar (specify): _____
- (25) Left side window glass or frame
- (26) Left side window glass including one or more of the following: frame, window sill, A-pillar, B-pillar, or roof side rail
- (27) Other left side object (specify): _____

RIGHT SIDE
- (30) Right side interior surface, excluding hardware or armrests
- (31) Right side hardware or armrest
- (32) Right A pillar
- (33) Right B pillar
- (34) Other right pillar (specify): _____
- (35) Right side window glass or frame
- (36) Right side window glass including one or more of the following: frame, window sill, A-pillar, B-pillar, or roof side rail
- (37) Other right side object (specify): _____

INTERIOR
- (40) Seat, back support
- (41) Belt restraint webbing/buckle
- (42) Belt restraint B-pillar attachment point
- (43) Other restraint system component (specify): _____
- (44) Head restraint system
- (45) Air bag
- (46) Other occupants (specify): _____
- (47) Interior loose objects
- (48) Child safety seat (specify): _____
- (49) Other interior object (specify): _____

ROOF
- (50) Front header
- (51) Rear header
- (52) Roof left side rail
- (53) Roof right side rail
- (54) Roof or convertible top

FLOOR
- (56) Floor including toe pan
- (57) Floor or console mounted transmission lever, including console
- (58) Parking brake handle
- (59) Foot controls including parking brake

REAR
- (60) Backlight (rear window)
- (61) Backlight storage rack, door, etc.
- (62) Other rear object (specify): _____

CONFIDENCE LEVEL OF CONTACT POINT
- (1) Certain
- (2) Probable
- (3) Possible
- (4) Unknown

AUTOMATIC RESTRAINTS

NOTES: Encode the data for each applicable front seat position. The attributes for the variables may be found below. Restraint systems should be assessed during the vehicle inspection then coded on the Occupant Assessment Form.

		Left	Center	Right
FIRST	Availability	5	Ø	5
	Function	1	Ø	1
	Failure	1	Ø	1

Automatic (Passive) Restraint System Availability

(0) Not equipped/not available
(1) Airbag
(2) Airbag disconnected (specify):

_____

(3) Airbag not reinstalled
(4) 2 point automatic belts
(5) 3 point automatic belts
(6) Automatic belts destroyed or rendered inoperative
(9) Unknown

Automatic (Passive) Restraint Function

(0) Not equipped/not available

Automatic Belt
(1) Automatic belt in use
(2) Automatic belt not in use
(3) Automatic belt use unknown

Air Bag
(4) Airbag deployed during accident
(5) Airbag deployed inadvertently just prior to accident
(6) Deployed, accident sequence undetermined
(7) Nondeployed
(8) Unknown if deployed
(9) Unknown

Did Automatic (Passive) Restraint Fail

(0) Not equipped/not available
(1) No
(2) Yes (specify): _____
(9) Unknown

MANUAL RESTRAINTS

NOTES: Encode the applicable data **for each seat position** in the vehicle. The attributes for the variables may be found below. Restraint systems should be assessed during the vehicle inspection then coded on the Occupant Assessment Form.

If a child safety seat is present, encode the data on the back of this page.

If the vehicle has automatic restraints available, encode the appropriate data on the back of the previous page.

		Left	Center	Right
FIRST	Availability			
	Use			
	Failure Modes			
SECOND	Availability	4	3	4
	Use	99	99	04
	Failure Modes	9	9	1
THIRD	Availability			
	Use			
	Failure Modes			
OTHER	Availability			
	Use			
	Failure Modes			

Manual (Active) Belt System Availability

(0) Not available
(1) Belt removed/destroyed
(2) Shoulder belt
(3) Lap belt
(4) Lap and shoulder belt
(5) Belt available — type unknown
(8) Other belt (specify):

_____

(9) Unknown

Manual (Active) Belt System Use

(00) None used, not available, or belt removed/destroyed
(01) Inoperative (specify):

_____

(02) Shoulder belt
(03) Lap belt
(04) Lap and shoulder belt
(05) Belt used — type unknown

_____

(08) Other belt used (specify):

_____

(12) Shoulder belt used with child safety seat
(13) Lap belt used with child safety seat
(14) Lap and shoulder belt used with child safety seat
(15) Belt used with child safety seat — type unknown
(18) Other belt used with child safety seat (specify):

_____

(99) Unknown if belt used

Manual (Active) Belt Failure Modes During Accident

(0) No manual belt used or not available
(1) No manual belt failure(s)
(2) Torn webbing (stretched webbing not included)
(3) Broken buckle or latchplate
(4) Upper anchorage separated
(5) Other anchorage separated (specify):

_____

(6) Broken retractor
(7) Combination of above (specify):

_____

(8) Other manual belt failure (specify):

_____

(9) Unknown

CHILD SAFETY SEAT FIELD ASSESSMENT

When a child safety seat is present enter the occupant's number in the first row and complete the column below the occupant's number using the codes listed below. Complete a column for each child safety seat present.

Occupant Number						
1. Type of Child Safety Seat						
2. Child Safety Seat Orientation						
3. Child Safety Seat Harness Usage						
4. Child Safety Seat Shield Usage						
5. Child Safety Seat Tether Usage						
6. Child Safety Seat Make/Model	Specify Below for Each Child Safety Seat					

1. Type of Child Safety Seat

   (0) No child safety seat
   (1) Infant seat
   (2) Toddler seat
   (3) Convertible seat
   (4) Booster seat
   (7) Other type child safety seat (specify):

   _____

   (8) Unknown child safety seat type
   (9) Unknown if child safety seat used

2. Child Safety Seat Orientation

   (00) No child safety seat

   Designed for Rear Facing for This Age/Weight
   (01) Rear facing
   (02) Forward facing
   (03) Other orientation (specify):

   _____

   (04) Unknown orientation

   Designed for Forward Facing for This Age/Weight
   (11) Rear facing
   (12) Forward facing
   (18) Other orientation (specify):

   _____

   (19) Unknown orientation

   Unknown Design or Orientation for This Age/Weight, or Unknown Age/Weight
   (21) Rear facing
   (22) Forward facing
   (28) Other orientation (specify):

   _____

   (29) Unknown orientation

   (99) Unknown if child safety seat used

3. Child Safety Seat Harness Usage

4. Child Safety Seat Shield Usage

5. Child Safety Seat Tether Usage

   Note: Options Below Are Used for Variables 3-5.

   (00) No child safety seat

   Not Designed with Harness/Shield/Tether
   (01) After market harness/shield/tether added, not used
   (02) After market harness/shield/tether used
   (03) Child safety seat used, but no after market harness/shield/tether added
   (09) Unknown if harness/shield/tether added or used

   Designed with Harness/Shield/Tether
   (11) Harness/shield/tether not used
   (12) Harness/shield/tether used
   (19) Unknown if harness/shield/tether used

   Unknown if Designed with Harness/Shield/Tether
   (21) Harness/shield/tether not used
   (22) Harness/shield/tether used
   (29) Unknown if harness/shield/tether used

   (99) Unknown if child safety seat used

6. Child Safety Seat Make/Model
   (Specify make/model and occupant number)

   _____

   _____

   _____

   _____

HEAD RESTRAINTS/SEAT EVALUATION

NOTES: Encode the applicable data for **each seat position** in the vehicle. The attributes for these variables may be found at the bottom of the page. Head restraint type/damage and seat type/performance should be assessed during the vehicle inspection then coded on the Occupant Assessment Form.

		Left	Center No center seat position	Right
FIRST	Head Restraint Type/Damage	3	0	3
	Seat Type	06	06	06
	Seat Performance	6	1	6
SECOND	Head Restraint Type/Damage	1	0	1
	Seat Type	03	03	03
	Seat Performance	1	1	1
THIRD	Head Restraint Type/Damage			
	Seat Type			
	Seat Performance			
OTHER	Head Restraint Type/Damage			
	Seat Type			
	Seat Performance			

Head Restraint Type/Damage by Occupant at This Occupant Position

(0) No head restraints
(1) Integral — no damage
(2) Integral — damaged during accident
(3) Adjustable — no damage
(4) Adjustable — damaged during accident
(5) Add-on — no damage
(6) Add-on — damaged during accident
(8) Other (specify): _____
(9) Unknown

Seat Type (This Occupant Position)

(00) No seat
(01) Bucket
(02) Bucket with folding back
(03) Bench
(04) Bench with separate back cushions
(05) Bench with folding back(s)
(06) Split bench with separate back cushions
(07) Split bench with folding back(s)
(08) Pedestal (i.e., van type)
(09) Other seat type (specify): _____
(99) Unknown

Seat Performance (This Occupant Position)

(0) No seat
(1) No seat performance failure(s)
(2) Seat adjusters failed
(3) Seat back folding locks failed
(4) Seat tracks/anchors failed
(5) Deformed by impact of occupant
(6) Deformed by passenger compartment intrusion (specify): Severe intrusion buckled seat cushion + arm rest
(7) Combination of above (specify):
(8) Other (specify): _____
(9) Unknown

DESCRIBE ANY INDICATION OF ABNORMAL OCCUPANT POSTURE (I.E. UNUSUAL OCCUPANT CONTACT PATTERN)

None

EJECTION/ENTRAPMENT DATA

Complete the following if the researcher has any indications that an occupant was either ejected from or entrapped in the vehicle. Code the appropriate data on the Occupant Assessment Form.

EJECTION No [X] Yes [ ]

Describe indications of ejection and body parts involved in partial ejection(s):

Occupant Number						
Ejection						
(Note on Vehicle Interior Sketch) Ejection Area						
Ejection Medium						
Medium Status						

Ejection
(1) Complete ejection
(2) Partial ejection
(3) Ejection, unknown degree
(9) Unknown

Ejection Area
(1) Windshield
(2) Left front
(3) Right front
(4) Left rear
(5) Right rear
(6) Rear
(7) Roof
(8) Other area (e.g., back of pickup, etc.) (specify): _____
(9) Unknown

Ejection Medium
(1) Door/hatch/tailgate
(2) Nonfixed roof structure
(3) Fixed glazing
(4) Nonfixed glazing (specify): _____
(5) Integral structure
(8) Other medium (specify): _____
(9) Unknown

Medium Status (Immediately Prior to Impact)
(1) Open
(2) Closed
(3) Integral structure
(9) Unknown

ENTRAPMENT No [X] Yes [ ]

Describe entrapment mechanism: _____

Component(s): _____

(Note in vehicle interior diagram)

PSU NUMBER 42

CASE NUMBER 080A

VEHICLE NUMBER 01

OCCUPANT NUMBER 01

OCCUPANT INJURY FORM

THE FOLLOWING DATA IS NOT INCLUDED IN THIS CASE:

[✓] ENTIRE FORM

[] PAGE NUMBER (S) _____

U.S. Department of Transportation
National Highway Traffic Safety Administration

EXTERIOR VEHICLE FORM

NATIONAL ACCIDENT SAMPLING SYSTEM
CRASHWORTHINESS DATA SYSTEM

1. Primary Sampling Unit Number 4 2	3. Vehicle Number 0 2
2. Case Number – Stratum 0 8 0 A	

VEHICLE IDENTIFICATION

VIN J N 1 H J 0 1 P 2 L T [redacted] Model Year 1990

Vehicle Make (specify): Nissan Vehicle Model (specify): Maxima

LOCATOR

Locate the end of the damage with respect to the vehicle longitudinal center line or bumper corner for end impacts or an undamaged axle for side impacts.

Specific Impact No.	Location of Direct Damage	Location of Field L	Location of Maximum Crush
01	begins 9.5" behind front axle, extends back 80.5"	begins 19.75" behind front axle, back 98.2"	C 2
02	begins 35.75 (D) of (R) bc (rear), extends to 34	All back	

CRUSH PROFILE

NOTES: Identify the plane at which the C-measurements are taken (e.g., at bumper, above bumper, at sill, above sill, etc.) and label adjustments (e.g., free space).

Measure C1 to C6 from driver to passenger side in front or rear impacts and rear to front in side impacts.

Free space value is defined as the distance between the baseline and the original body contour taken at the individual C locations. This may include the following: bumper lead, bumper taper, side protrusion, side taper, etc. Record the value for each C-measurement and maximum crush.

Use as many lines/columns as necessary to describe each damage profile.

Specific Impact Number	Plane of C-Measurements	Direct Damage Width (CDC)	Direct Damage Max Crush	Field L	C_1	C_2	C_3	C_4	C_5	C_6	±D
01	(D) side, mid door	80.5	26.75	98.2	2.7	26.75	25	14.25	9	.2	-7.85
02	Back (all)				UNABLE to ASSESS						

HS Form 435A (Rev. 1/90)

VEHICLE DAMAGE SKETCH

TIRE—WHEEL DAMAGE

a. Rotation physically restricted		b. Tire deflated	
RF	2	RF	2
LF	2	LF	2
RR	2	RR	2
LR	1	LR	

broken axle

(1) Yes (2) No (8) NA (9) Unk.

TYPE OF TRANSMISSION

☐ Manual ☑ Automatic

ORIGINAL SPECIFICATIONS

Wheelbase	104.3
Overall Length	187.6
Maximum Width	69.3
Curb Weight	3086
Average Track	59.4 / 58.7
Front Overhang	
Rear Overhang	
Engine Size: cyl./ displ.	6cl /3.0l
Undeformed End Width	

WHEEL STEER ANGLES

(For locked front wheels or displaced rear axles only)

RF ± ___ °
LF ± ___ °
RR ± ___ °
LR ± ___ °

Within ±5 degrees

DRIVE WHEELS

☑ FWD ☐ RWD ☐ 4WD

Approximate Cargo Weight 0.0

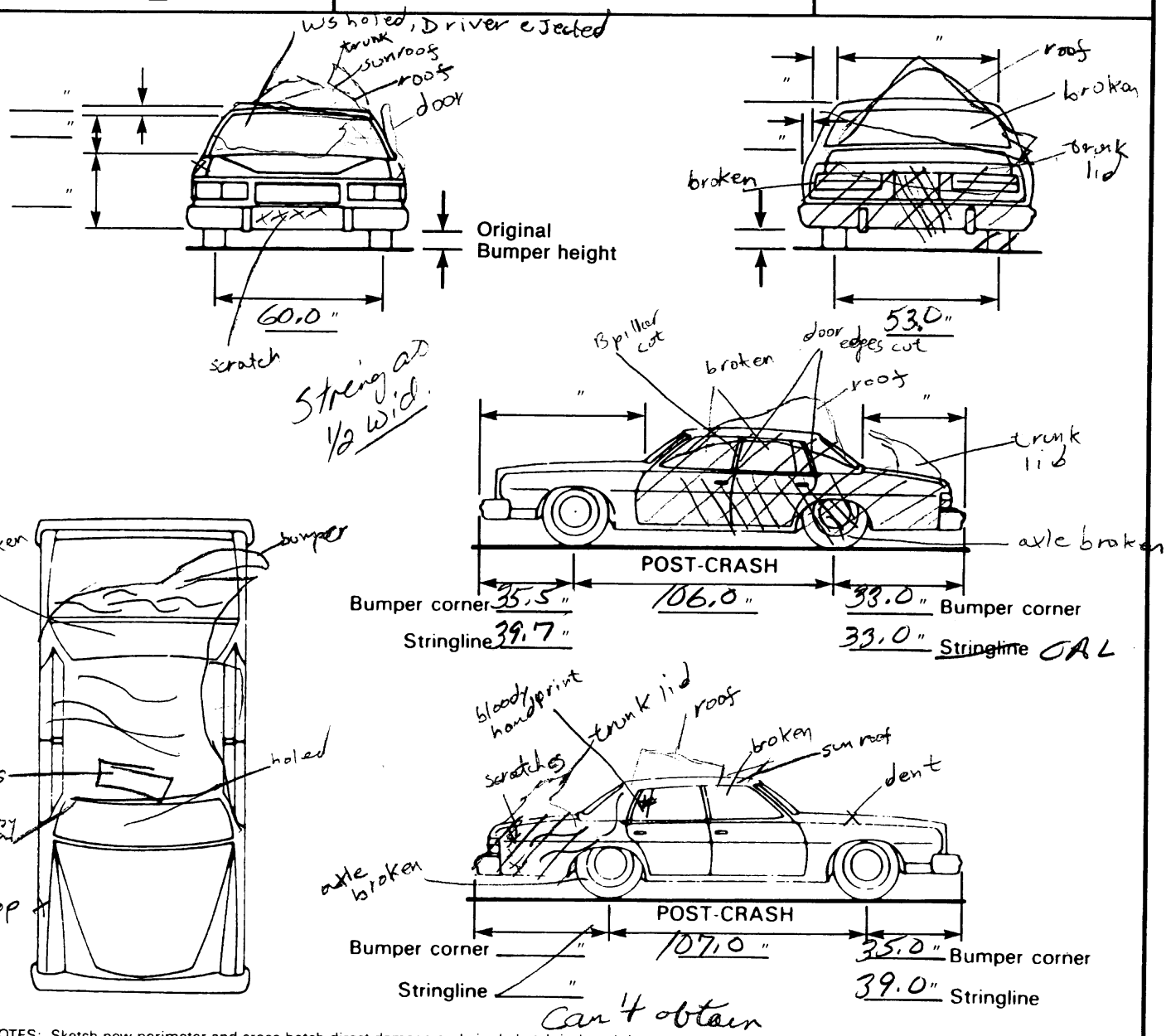

NOTES: Sketch new perimeter and cross hatch direct damage and single hatch induced damage on all views. Annotate observations which might be useful in reconstructing the accident (e.g., grass in tire bead, direction of striations, scuff on sidewall, etc.). If pulling trailer, sketch type of trailer and damage received on the back of this page.
Annotate any damage caused by extrication such as component removal by torching, prying, or hydraulic shears.

CDC WORKSHEET

CODES FOR OBJECT CONTACTED

01-30—Vehicle Number

Noncollision
- (31) Overturn—rollover
- (32) Fire or explosion
- (33) Jackknife
- (34) Other intraunit damage (specify): _____
- (35) Noncollision injury
- (38) Other noncollision (specify): _____
- (39) Noncollision—details unknown

Collision with Fixed Object
- (41) Tree (≤4 inches in diameter)
- (42) Tree (>4 inches in diameter)
- (43) Shrubbery or bush
- (44) Embankment
- (45) Breakaway pole or post (any diameter)

Nonbreakaway Pole or Post
- (50) Pole or post (≤4 inches in diameter)
- (51) Pole or post (>4 but ≤12 inches in diameter)
- (52) Pole or post (>12 inches in diameter)
- (53) Pole or post (diameter unknown)
- (54) Concrete traffic barrier
- (55) Impact attenuator
- (56) Other traffic barrier (specify): _____
- (57) Fence
- (58) Wall
- (59) Building
- (60) Ditch or Culvert
- (61) Ground
- (62) Fire hydrant
- (63) Curb
- (64) Bridge
- (68) Other fixed object (specify): _____
- (69) Unknown fixed object

Collision With Nonfixed Object
- (71) Motor vehicle not in transport
- (72) Pedestrian
- (73) Cyclist or cycle
- (74) Other nonmotorist or conveyance (specify): _____
- (75) Vehicle occupant
- (76) Animal
- (77) Train
- (78) Trailer, disconnected in transport
- (88) Other nonfixed object (specify): _____
- (89) Unknown nonfixed object
- (98) Other event (specify): _____
- (99) Unknown event or object

DEFORMATION CLASSIFICATION BY EVENT NUMBER

Accident Event Sequence Number	Object Contacted	(1) (2) Direction of Force (degrees)	Incremental Value of Shift	(3) Deformation Location	(4) Specific Longitudinal or Lateral Location	(5) Specific Vertical or Lateral Location	(6) Type of Damage Distribution	(7) Deformation Extent
01	01	~~260~~ 300	00	L	Z	A	W	04
~~03~~ 05	51	180	00	B	C	E	N	03
04	63	090°	00	R	B	W	N	03

U.S. Department of Transportation
National Highway Traffic Safety Administration

INTERIOR VEHICLE FORM

NATIONAL ACCIDENT SAMPLING SYSTEM
CRASHWORTHINESS DATA SYSTEM

1. Primary Sampling Unit Number 42
2. Case Number–Stratum 0800A
3. Vehicle Number 02

INTEGRITY

4. Passenger Compartment Integrity 98

(00) No integrity loss

Yes, Integrity Was Lost Through
(01) Windshield
(02) Door (side)
(03) Door/hatch (rear)
(04) Roof
(05) Roof glass
(06) Side window
(07) Rear window
(08) Roof and roof glass
(09) Windshield and door (side)
(10) Windshield and roof
(11) Side and rear window
(12) Windshield and side window
(13) Door and side window
(98) Other combination of above (specify): WS, Sun roof, RF, BL, LF, LR
(99) Unknown

Door, Tailgate Or Hatch Opening insufficient photo's

5. LF ~~3~~ 9 6. RF 1 7. LR 3 8. RR 1 9. TG/H 0

(0) No door/gate/hatch
(1) Door/gate/hatch remained closed and operational
(2) Door/gate/hatch came open during collision
(3) Door/gate/hatch jammed shut
(8) Other (specify):
(9) Unknown

NASS CODING CHANGE
1st Review: 20
2nd Review:

Damage/Failure Associated with Door, Tailgate or Hatch Opening in Collision. If IV05-IV09 ≠ 2, Then Code 0.

10. LF 0 11. RF 0 12. LR 0 13. RR 0 14. TG/H 0

(0) No door/gate/hatch or door not opened

Door, Tailgate, or Hatch Came Open During Collision
(1) Door operational (no damage)
(2) Latch/striker failure due to damage
(3) Hinge failure due to damage
(4) Door structure failure due to damage
(5) Door support (i.e., pillar, sill, roof side rail, etc.) failure due to damage
(6) Latch/striker and hinge failure due to damage
(8) Other failure (specify):
(9) Unknown

GLAZING

Glazing Damage from Impact Forces

15. WS ~~5~~ 9 16. LF 6 17. RF 6 18. LR 6 19. RR 0
20. BL 6 21. Roof 4 22. Other 0

(0) No glazing damage from impact forces
(2) Glazing in place and cracked from impact forces
(3) Glazing in place and holed from impact forces
(4) Glazing out-of-place (cracked or not) and not holed from impact forces
(5) Glazing out-of-place and holed from impact forces
(6) Glazing disintegrated from impact forces
(7) Glazing removed prior to accident
(8) No glazing
(9) Unknown if damaged

* most likely w/s damage caused by Rescue Personnel

NASS CODING CHANGE
1st Review: 20
2nd Review:

Glazing Damage from Occupant Contact

23. WS ~~5~~ 9 24. LF 0 25. RF 0 26. LR 0 27. RR 0
28. BL ~~4~~ 0 29. Roof 0 30. Other 2

(0) No occupant contact to glazing or no glazing
(1) Glazing contacted by occupant but no glazing damage
(2) Glazing in place and cracked by occupant contact
(3) Glazing in place and holed by occupant contact
(4) Glazing out-of-place (cracked or not) by occupant contact and not holed by occupant contact
(5) Glazing out-of-place by occupant contact and holed by occupant contact
(6) Glazing disintegrated by occupant contact
(9) Unknown if contacted by occupant

NASS CODING CHANGE
1st Review: 20
2nd Review:

If No Glazing Damage ***And*** No Occupant Contact or No Glazing, Then Code IV 31 Through IV 46 As 0

Type of Window/Windshield Glazing

31. WS 1 32. LF 8 33. RF 8 34. LR 8 35. RR 0
36. BL 8 37. Roof 3 38. Other 8

(0) No glazing contact and no damage, or no glazing
(1) AS-1 – Laminated
(2) AS-2 – Tempered
(3) AS-3 – Tempered-tinted
(4) AS-14 – Glass/Plastic
(8) Other (specify): LF, RF, LR, BL, Other - all AS2 w/add on tint
(9) Unknown

Window Precrash Glazing Status

39. WS 1 40. LF 2 41. RF 2 42. LR 2 43. RR 0
44. BL 1 45. Roof 2 46. Other 1

(0) No glazing contact and no damage, or no glazing
(1) Fixed
(2) Closed
(3) Partially opened
(4) Fully opened
(9) Unknown

INTRUSION WORK SHEET

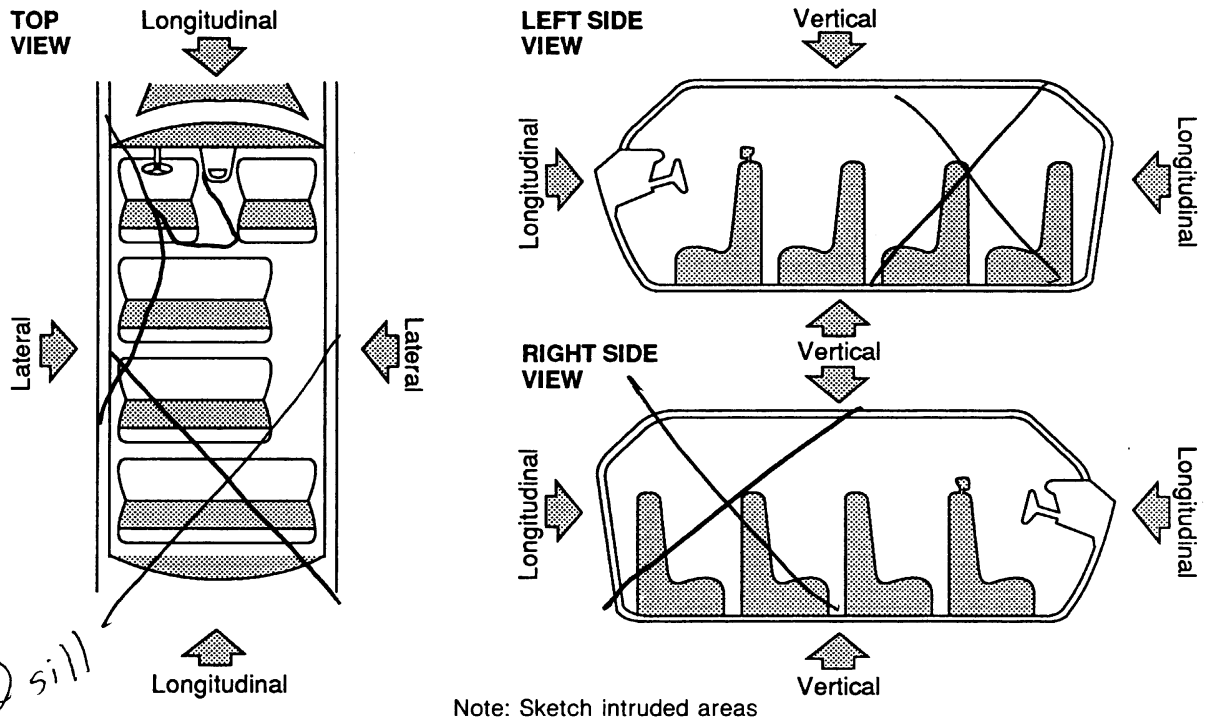

(R) sill

Note: Sketch intruded areas

RL=

LOCATION OF INTRUSION	INTRUDED COMPONENT	COMPARISION VALUE	–	INTRUDED VALUE	=	INTRUSION	DOMINANT CRUSH DIRECTION
11	Side panel forward of A-Pillar		–	51	=		Lat
11	Door panel		–	43.5	=		
11	A-Pillar		–	49	=		
11	Floor pan		–	52.2	=		
11	Instr. panel	55	–	53.6	=		
13	11's seat back		–	19.5	=		
13	Center console		–	23.4	=		
11	B-Pillar		–	34.5	=		
21	Door panel		–	30.5	=		
21	floor pan		–	45.5	=		
21	C-Pillar		–	26.4	=		
21	Seat Cushion		–	33	=		
11	Roof side rail		–	42	=		
21	" "		–	27	=		
			–		=		

Pillar cut est

Document no more than the 15 most severe intrusions

OCCUPANT AREA INTRUSION

Note: If no intrusions, leave variables IV 47-IV 86 blank.

	Location of Intrusion	Intruding Component	Magnitude of Intrusion	Dominant Crush Direction
1st	47. 21	48. 08	49. 6	50. 3
2nd	51. 11	52. 07	53. 5	54. 3
3rd	55. 21	56. 10	57. 5	58. 3
4th	59. 21	60. 24	61. 4	62. 3
5th	63. 11	64. 13	65. 4	66. 3
6th	67. 11	68. 10	69. 4	70. 3
7th	71. 11	72. 06	73. 3	74. 3
8th	75. 21	76. 13	77. 3	78. 3
9th	79. 11	80. 27	81. 2	82. 3
10th	83. 11	84. 17	85. 2	86. 3

LOCATION OF INTRUSION

Front Seat
- (11) Left
- (12) Middle
- (13) Right

Second Seat
- (21) Left
- (22) Middle
- (23) Right

Third Seat
- (31) Left
- (32) Middle
- (33) Right

Fourth Seat
- (41) Left
- (42) Middle
- (43) Right

- (97) Catastrophic
- (98) Other enclosed area (specify): _____
- (99) Unknown

INTRUDING COMPONENT

Interior Components
- (01) Steering assembly
- (02) Instrument panel left
- (03) Instrument panel center
- (04) Instrument panel right
- (05) Toe pan
- (06) A-pillar
- (07) B-pillar
- (08) C-pillar
- (09) D-pillar
- (10) Door panel
- (12) Roof (or convertible top)
- (13) Roof side rail
- (14) Windshield
- (15) Windshield header
- (16) Window frame
- (17) Floor pan
- (18) Backlight header
- (19) Front seat back
- (20) Second seat back
- (21) Third seat back
- (22) Fourth seat back
- (23) Fifth seat back
- (24) Seat cushion
- (25) Back panel or door surface
- (26) Other interior component (specify): _____
- (27) Side panel - forward of the A-pillar
- (28) Side panel - rear of the A-pillar

Exterior Components
- (30) Hood
- (31) Outside surface of vehicle (specify): _____
- (32) Other exterior object in the environment (specify): _____
- (33) Unknown exterior object
- (97) Catastrophic
- (98) Intrusion of unlisted component(s) (specify): _____
- (99) Unknown

MAGNITUDE OF INTRUSION
- (1) ≥ 1 inch but < 3 inches
- (2) ≥ 3 inches but < 6 inches
- (3) ≥ 6 inches but < 12 inches
- (4) ≥ 12 inches but < 18 inches
- (5) ≥ 18 inches but < 24 inches
- (6) ≥ 24 inches
- (7) Catastrophic
- (9) Unknown

DOMINANT CRUSH DIRECTION
- (1) Vertical
- (2) Longitudinal
- (3) Lateral
- (7) Catastrophic
- (9) Unknown

STEERING COLUMN WORKING DIAGRAMS

STEERING COLUMN COLLAPSE

Steering Column Shear Module Movement

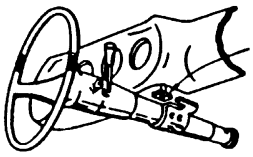

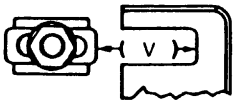

Left ____

Right ____ V = _____"

Direction and Magnitude of Steering Column Movement

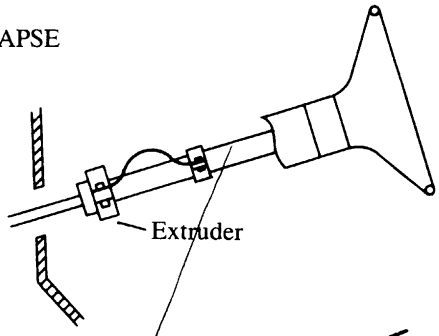

After Compression

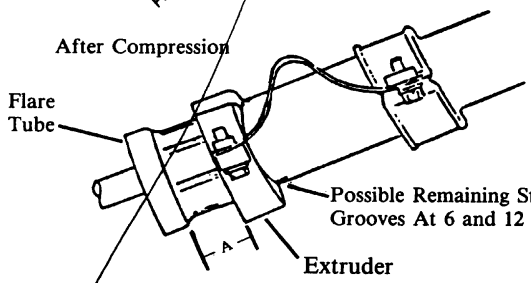

Compression = Measurement A A = _____

STEERING COLUMN MOVEMENT

Vertical Movement

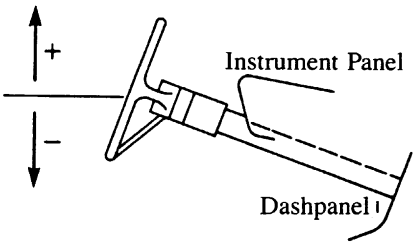

Lateral Movement

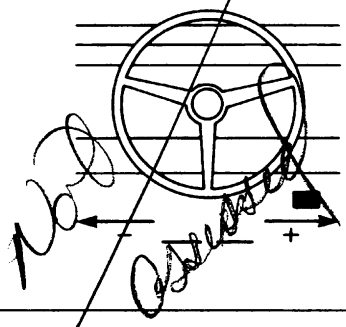

Longitudinal Movement

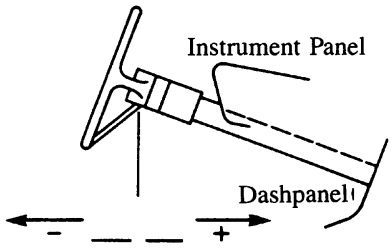

	COMPARISON VALUE	–	DAMAGED VALUE	=	MOVEMENT
VERTICAL		–		=	
LATERAL		–		=	
LONGITUDINAL		–		=	

STEERING RIM/SPOKE DEFORMATION

COMPARISON VALUE	–	DAMAGED VALUE	=	DEFORMATION
	–		=	none
	–		=	

STEERING COLUMN

87. Steering Column Type 2
(1) Fixed column
(2) Tilt column
(3) Telescoping column
(4) Tilt and telescoping column
(8) Other column type (specify): _____
(9) Unknown

If PDOF ≠ 11, 12 or 1, Then Code IV88-IV91 As 96

88. Steering Column Collapse Due to Occupant Loading 96

_____ Code actual measured movement to the nearest inch. See coding manual for measurement technique(s).
(00) No movement, compression, or collapse
(01-19) Actual measured value
(20) 20 inches or greater

Estimated movement from observation
(81) Less than 1 inch
(82) ≥ 1 inch but < 2 inches
(83) ≥ 2 inches but < 4 inches
(84) ≥ 4 inches but < 6 inches
(85) ≥ 6 inches but < 8 inches
(86) Greater than or equal to 8 inches
(96) Not assessed (PDOF ≠ 11, 12, 1)
(97) Apparent movement, value undetermined or cannot be measured or estimated
(98) Nonspecified type column
(99) Unknown

Direction And Magnitude of Steering Column Movement

89. Vertical Movement + 96

90. Lateral Movement + 96

91. Longitudinal Movement + 96

Code the actual measured movement to the nearest inch. See Coding Manual for measurement technique(s)
(00) No steering column movement
(±01—±49) Actual measured value
(±50) 50 inches or greater

Estimated movement from observation
(±81) ≥ 1 inch but < 3 inches
(±82) ≥ 3 inches but < 6 inches
(±83) ≥ 6 inches but < 12 inches
(±84) ≥ 12 inches
(__96) Not assessed (PDOF ≠ 11, 12, 1)
(__97) Apparent movement > 1 inch but cannot be measured or estimated
(__99) Unknown

92. Steering Rim/Spoke Deformation 0

_____ Code actual measured deformation to the nearest inch.
(0) No steering rim deformation
(1-5) Actual measured value
(6) 6 inches or more
(8) Observed deformation cannot be measured
(9) Unknown

93. Location of Steering Rim/Spoke Deformation 00

(00) No steering rim deformation

Quarter Sections
(01) Section A
(02) Section B
(03) Section C
(04) Section D

Half Sections
(05) Upper half of rim/spoke
(06) Lower half of rim/spoke
(07) Left half of rim/spoke
(08) Right half of rim/spoke

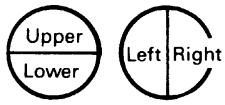

(09) Complete steering wheel collapse
(10) Undetermined location
(99) Unknown

INSTRUMENT PANEL

94. Odometer Reading 017,000

17185 **miles—Code mileage to the nearest 1,000 miles**
(000) No odometer
(001) Less than 1,500 miles
(300) 299,500 miles or more
(999) Unknown
Source [redacted]

95. Instrument Panel Damage from Occupant Contact? 1
(0) No
(1) Yes
(9) Unknown

96. Knee Bolsters Deformed from Occupant Contact? 8
(0) No
(1) Yes
(8) Not present
(9) Unknown

97. Did Glove Compartment Door Open During Collision(s)? 0
(0) No
(1) Yes
(8) Not present
(9) Unknown

VEHICLE INTERIOR SKETCHES

Note area of ejection/entrapment

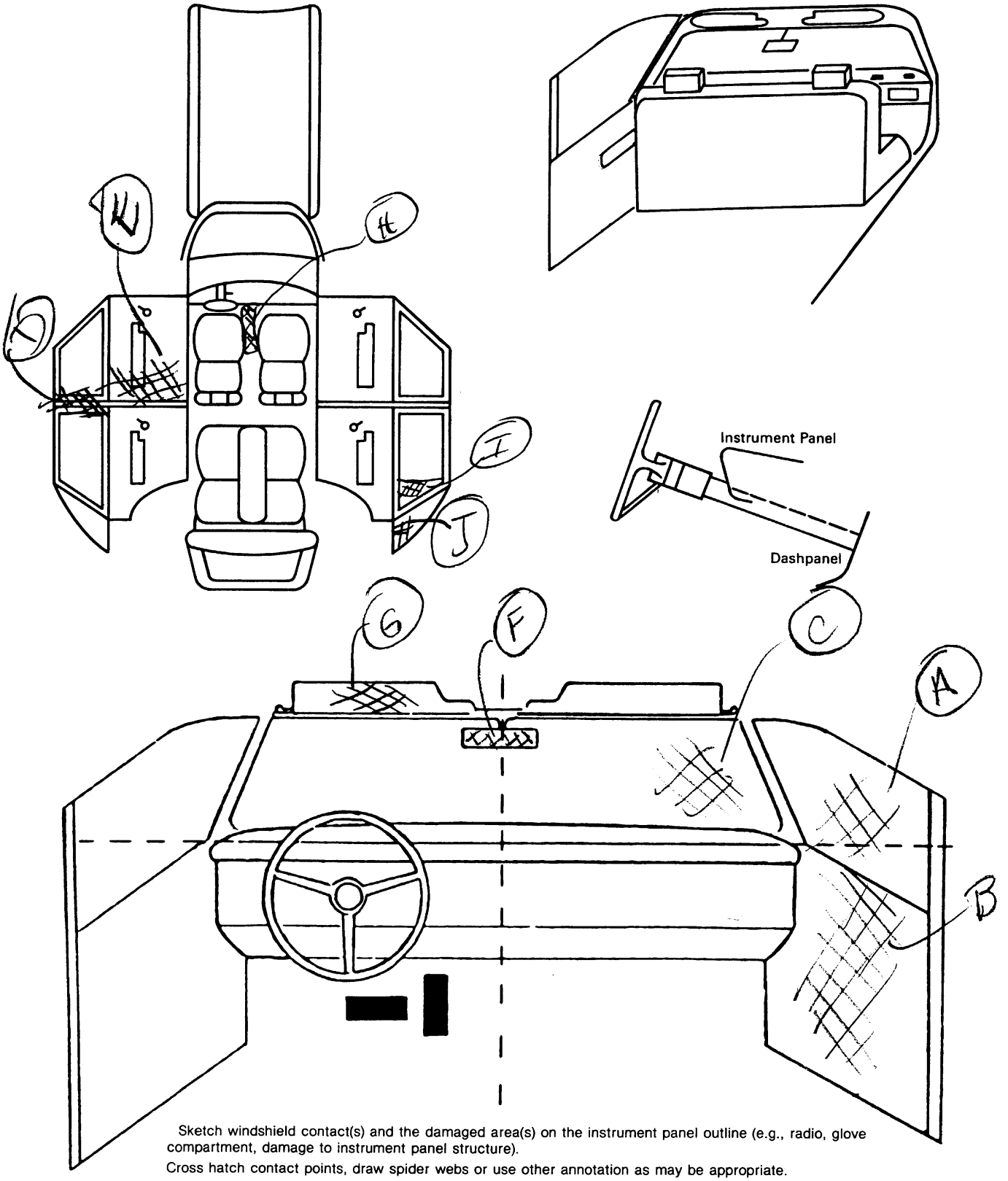

Sketch windshield contact(s) and the damaged area(s) on the instrument panel outline (e.g., radio, glove compartment, damage to instrument panel structure).

Cross hatch contact points, draw spider webs or use other annotation as may be appropriate.

Annotate the contacted area with a letter (begin with A) and list on the Points of Occupant Contact page.

POINTS OF OCCUPANT CONTACT

Contact	Interior Component Contacted	Occupant No. If Known	Body Region If Known	Supporting Physical Evidence	Confidence Level of Contact Point
A	35	02	Head	Glazing Desint.	1
B	30	02	Up. torso	dented	1
C	91	01	Head	(glazing broken - pt. of eject.	1
D	23	01	Head	intruded + body fluids	1
E	20	01	Up. torso	intruded + dented	1
F	02	01/02	Head	Missing	2
G	03	01	Head	dented	1
H	57	01/02	Knee/legs	Cracked + dented	1
I	35	03	Head	Cracked	1
J	34	03	Head	Body fluids	1
K					
L					
M					
N					

CODES FOR INTERIOR COMPONENTS

FRONT
- (01) Windshield
- (02) Mirror
- (03) Sunvisor
- (04) Steering wheel rim
- (05) Steering wheel hub/spoke
- (06) Steering wheel (combination of codes 04 and 05)
- (07) Steering column, transmission selector lever, other attachment
- (08) Add on equipment (e.g., CB, tape deck, air conditioner)
- (09) Left instrument panel and below
- (10) Center instrument panel and below
- (11) Right instrument panel and below
- (12) Glove compartment door
- (13) Knee bolster
- (14) Windshield including one or more of the following: front header, A-pillar, instrument panel, mirror,or steering assembly (driver side only)
- (15) Windshield including one or more of the following: front header, A-pillar, instrument panel, or mirror (passenger side only)
- (16) Other front object (specify): _____

LEFT SIDE
- (20) Left side interior surface, excluding hardware or armrests
- (21) Left side hardware or armrest
- (22) Left A pillar
- (23) Left B pillar
- (24) Other left pillar (specify): _____
- (25) Left side window glass or frame
- (26) Left side window glass including one or more of the following: frame, window sill, A-pillar, B-pillar, or roof side rail
- (27) Other left side object (specify): _____

RIGHT SIDE
- (30) Right side interior surface, excluding hardware or armrests
- (31) Right side hardware or armrest
- (32) Right A pillar
- (33) Right B pillar
- (34) Other right pillar (specify): C-pillar
- (35) Right side window glass or frame
- (36) Right side window glass including one or more of the following: frame, window sill, A-pillar, B-pillar, or roof side rail
- (37) Other right side object (specify): _____

INTERIOR
- (40) Seat, back support
- (41) Belt restraint webbing/buckle
- (42) Belt restraint B-pillar attachment point
- (43) Other restraint system component (specify): _____
- (44) Head restraint system
- (45) Air bag
- (46) Other occupants (specify): _____
- (47) Interior loose objects
- (48) Child safety seat (specify): _____
- (49) Other interior object (specify): _____

ROOF
- (50) Front header
- (51) Rear header
- (52) Roof left side rail
- (53) Roof right side rail
- (54) Roof or convertible top

FLOOR
- (56) Floor including toe pan
- (57) Floor or console mounted transmission lever, including console
- (58) Parking brake handle
- (59) Foot controls including parking brake

REAR
- (60) Backlight (rear window)
- (61) Backlight storage rack, door, etc.
- (62) Other rear object (specify): _____

CONFIDENCE LEVEL OF CONTACT POINT
- (1) Certain
- (2) Probable
- (3) Possible
- (4) Unknown

AUTOMATIC RESTRAINTS

NOTES: Encode the data for each applicable front seat position. The attributes for the variables may be found below. Restraint systems should be assessed during the vehicle inspection then coded on the Occupant Assessment Form.

		Left	Center	Right
FIRST	Availability	4	Ø	4
	Function	2	Ø	2
	Failure	1	Ø	1

Automatic (Passive) Restraint System Availability

(0) Not equipped/not available
(1) Airbag
(2) Airbag disconnected (specify): _____
(3) Airbag not reinstalled
(4) 2 point automatic belts
(5) 3 point automatic belts
(6) Automatic belts destroyed or rendered inoperative
(9) Unknown

Automatic (Passive) Restraint Function

(0) Not equipped/not available

Automatic Belt
(1) Automatic belt in use
(2) Automatic belt not in use
(3) Automatic belt use unknown

Air Bag
(4) Airbag deployed during accident
(5) Airbag deployed inadvertently just prior to accident
(6) Deployed, accident sequence undetermined
(7) Nondeployed
(8) Unknown if deployed
(9) Unknown

Did Automatic (Passive) Restraint Fail

(0) Not equipped/not available
(1) No
(2) Yes (specify): _____
(9) Unknown

MANUAL RESTRAINTS

NOTES: Encode the applicable data **for each seat position** in the vehicle. The attributes for the variables may be found below. Restraint systems should be assessed during the vehicle inspection then coded on the Occupant Assessment Form.

If a child safety seat is present, encode the data on the back of this page.

If the vehicle has automatic restraints available, encode the appropriate data on the back of the previous page.

		Left	Center	Right
FIRST	Availability	Damaged 3	0	3
	Use	99	00	00
	Failure Modes	9	0	0
SECOND	Availability	4	4	3
	Use	Damaged 99	Con Locate 99	00
	Failure Modes	9	9	0
THIRD	Availability			
	Use			
	Failure Modes			
OTHER	Availability			
	Use			
	Failure Modes			

Manual (Active) Belt System Availability

(0) Not available
(1) Belt removed/destroyed
(2) Shoulder belt
(3) Lap belt
(4) Lap and shoulder belt
(5) Belt available — type unknown
(8) Other belt (specify): _____
(9) Unknown

Manual (Active) Belt System Use

(00) None used, not available, or belt removed/destroyed
(01) Inoperative (specify): _____
(02) Shoulder belt
(03) Lap belt
(04) Lap and shoulder belt
(05) Belt used — type unknown
(08) Other belt used (specify): _____
(12) Shoulder belt used with child safety seat
(13) Lap belt used with child safety seat
(14) Lap and shoulder belt used with child safety seat
(15) Belt used with child safety seat — type unknown
(18) Other belt used with child safety seat (specify): _____
(99) Unknown if belt used

Manual (Active) Belt Failure Modes During Accident

(0) No manual belt used or not available
(1) No manual belt failure(s)
(2) Torn webbing (stretched webbing not included)
(3) Broken buckle or latchplate
(4) Upper anchorage separated
(5) Other anchorage separated (specify): _____
(6) Broken retractor
(7) Combination of above (specify): _____
(8) Other manual belt failure (specify): _____
(9) Unknown

CHILD SAFETY SEAT FIELD ASSESSMENT

When a child safety seat is present enter the occupant's number in the first row and complete the column below the occupant's number using the codes listed below. Complete a column for each child safety seat present.

Occupant Number						
1. Type of Child Safety Seat						
2. Child Safety Seat Orientation						
3. Child Safety Seat Harness Usage						
4. Child Safety Seat Shield Usage						
5. Child Safety Seat Tether Usage						
6. Child Safety Seat Make/Model	Specify Below for Each Child Safety Seat					

1. Type of Child Safety Seat

(0) No child safety seat
(1) Infant seat
(2) Toddler seat
(3) Convertible seat
(4) Booster seat
(7) Other type child safety seat (specify):

_____

(8) Unknown child safety seat type
(9) Unknown if child safety seat used

2. Child Safety Seat Orientation

(00) No child safety seat

Designed for Rear Facing for This Age/Weight
(01) Rear facing
(02) Forward facing
(03) Other orientation (specify):

_____

(04) Unknown orientation

Designed for Forward Facing for This Age/Weight
(11) Rear facing
(12) Forward facing
(18) Other orientation (specify):

_____

(19) Unknown orientation

Unknown Design or Orientation for This Age/Weight, or Unknown Age/Weight
(21) Rear facing
(22) Forward facing
(28) Other orientation (specify):

_____

(29) Unknown orientation

(99) Unknown if child safety seat used

3. Child Safety Seat Harness Usage

4. Child Safety Seat Shield Usage

5. Child Safety Seat Tether Usage

Note: Options Below Are Used for Variables 3-5.

(00) No child safety seat

Not Designed with Harness/Shield/Tether
(01) After market harness/shield/tether added, not used
(02) After market harness/shield/tether used
(03) Child safety seat used, but no after market harness/shield/tether added
(09) Unknown if harness/shield/tether added or used

Designed with Harness/Shield/Tether
(11) Harness/shield/tether not used
(12) Harness/shield/tether used
(19) Unknown if harness/shield/tether used

Unknown if Designed with Harness/Shield/Tether
(21) Harness/shield/tether not used
(22) Harness/shield/tether used
(29) Unknown if harness/shield/tether used

(99) Unknown if child safety seat used

6. Child Safety Seat Make/Model
(Specify make/model and occupant number)

_____

_____

_____

_____

HEAD RESTRAINTS/SEAT EVALUATION

NOTES: Encode the applicable data for **each seat position** in the vehicle. The attributes for these variables may be found at the bottom of the page. Head restraint type/damage and seat type/performance should be assessed during the vehicle inspection then coded on the Occupant Assessment Form.

		Left	Center	Right
FIRST	Head Restraint Type/Damage	3	Ø	3
	Seat Type	Ø2	ØØ	Ø2
	Seat Performance	6	Ø	6
SECOND	Head Restraint Type/Damage	2	Ø	1
	Seat Type	Ø3	Ø3	Ø3
	Seat Performance	6	6	6
THIRD	Head Restraint Type/Damage			
	Seat Type			
	Seat Performance			
OTHER	Head Restraint Type/Damage			
	Seat Type			
	Seat Performance			

Head Restraint Type/Damage by Occupant at This Occupant Position

(0) No head restraints
(1) Integral — no damage
(2) Integral — damaged during accident
(3) Adjustable — no damage
(4) Adjustable — damaged during accident
(5) Add-on — no damage
(6) Add-on — damaged during accident
(8) Other (specify): _____
(9) Unknown

Seat Type (This Occupant Position)

(00) No seat
(01) Bucket
(02) Bucket with folding back
(03) Bench
(04) Bench with separate back cushions
(05) Bench with folding back(s)
(06) Split bench with separate back cushions
(07) Split bench with folding back(s)
(08) Pedestal (i.e., van type)
(09) Other seat type (specify): _____
(99) Unknown

Seat Performance (This Occupant Position)

(0) No seat
(1) No seat performance failure(s)
(2) Seat adjusters failed
(3) Seat back folding locks failed
(4) Seat tracks/anchors failed
(5) Deformed by impact of occupant
(6) Deformed by passenger compartment intrusion (specify): Seat, bucked, cushion & back
(7) Combination of above (specify):
(8) Other (specify): _____
(9) Unknown

DESCRIBE ANY INDICATION OF ABNORMAL OCCUPANT POSTURE (I.E. UNUSUAL OCCUPANT CONTACT PATTERN)

None

EJECTION/ENTRAPMENT DATA

Complete the following if the researcher has any indications that an occupant was either ejected from or entrapped in the vehicle. Code the appropriate data on the Occupant Assessment Form.

EJECTION No [ ] Yes [X]

Describe indications of ejection and body parts involved in partial ejection(s):

Complete ejection

~~Hoked W5~~

Inter. evidence Suggests BL for O3

~~SCALP, HAIR ONLY~~

Occupant Number	Ø1	Ø3				
Ejection	1	1				
(Note on Vehicle Interior Sketch) Ejection Area	~~1~~ 2	6				
Ejection Medium	~~3~~ 1	3				
Medium Status check fixed	2	2				

Ejection
(1) Complete ejection
(2) Partial ejection
(3) Ejection, unknown degree
(9) Unknown

Ejection Area
(1) Windshield
(2) Left front
(3) Right front
(4) Left rear
(5) Right rear
(6) Rear
(7) Roof
(8) Other area (e.g., back of pickup, etc.) (specify): _____
(9) Unknown

Ejection Medium
(1) Door/hatch/tailgate
(2) Nonfixed roof structure
(3) Fixed glazing
(4) Nonfixed glazing (specify): _____
(5) Integral structure
(8) Other medium (specify): _____
(9) Unknown

Medium Status (Immediately Prior to Impact)
(1) Open
(2) Closed
(3) Integral structure
(9) Unknown

ENTRAPMENT No [X] Yes [ ]

Describe entrapment mechanism: _____

Component(s): _____

(Note in vehicle interior diagram)

PSU NUMBER	42
CASE NUMBER	080A
VEHICLE NUMBER	02
OCCUPANT NUMBER	01

OCCUPANT INJURY FORM

THE FOLLOWING DATA IS NOT INCLUDED IN THIS CASE:

[✓] ENTIRE FORM

[] PAGE NUMBER (S) _____

U.S. Department of Transportation
National Highway Traffic Safety Administration

UPDATE FORM

NATIONAL ACCIDENT SAMPLING SYSTEM
CRASHWORTHINESS DATA SYSTEM

1. Primary Sampling Unit Number 42
2. Case Number – Stratum 080A
3. Vehicle Number 02
4. Occupant Number 01

[redacted]

Driver or Occupant Name: _____

Address: _____

Other Information: _____

(Sanitize this section prior to Update submission.)

INJURY DATA CODED ON INITIAL SUBMISSION

	Source of Injury Data	O.I.C.–A.I.S. Body Region	Aspect	Lesion	System Organ	A.I.S. Severity	Injury Source	Injury Source Confidence Level	Direct/ Indirect Injury	Occupant Area Intrusion No.
1st	5.	6.	7.	8.	9.	10.	11.	12.	13.	14.
2nd	15.	16.	17.	18.	19.	20.	21.	22.	23.	24.
3rd	25.	26.	27.	28.	29.	30.	31.	32.	33.	34.
4th	35.	36.	37.	38.	39.	40.	41.	42.	43.	44.
5th	45.	46.	47.	48.	49.	50.	51.	52.	53.	54.
6th	55.	56.	57.	58.	59.	60.	61.	62.	63.	64.
7th	65.	66.	67.	68.	69.	70.	71.	72.	73.	74.
8th	75.	76.	77.	78.	79.	80.	81.	82.	83.	84.
9th	85.	86.	87.	88.	89.	90.	91.	92.	93.	94.
10th	95.	96.	97.	98.	99.	100.	101.	102.	103.	104.

NOTE: If necessary, keep copy of original Occupant Injury form and submit as part of update.

UPDATED CASE INFORMATION

	INITIAL SUBMISSION	FINAL
GV12. Alcohol Test Results for Driver	96	96
OA05. Occupant's Age	26	26
OA06. Occupant's Sex	1	1
OA07. Occupant's Height	69	69
OA08. Occupant's Weight	206	206
OA17. Manual (Active) Belt System Availability	3	3
OA18. Manual (Active) Belt System Use	00	00
OA21. Automatic (Passive) Restraint System Availability	4	6
OA22. Automatic (Passive) Restraint Function	2	0

	INITIAL SUBMISSION	FINAL
OA35. Treatment – Mortality	1	1
OA36. Type of Medical Facility (for Initial Treatment)	0	0
OA37. Hospital Stay	00	00
OA38. Working Days Lost	62	62
OA39. Time to Death	01	01
OA40. 1st Medically Reported Cause of Death	99	99
OA41. 2nd Medically Reported Cause of Death	00	00
OA42. 3rd Medically Reported Cause of Death	00	00
OA43. Number of Recorded Injuries for This Occupant	97	10

HS Form 433C (Rev. 1/90)

INJURY DATA

Record below the actual injuries sustained by this occupant that were identified from the unofficial and official prior to initial case submission **and from subsequently** acquired medical data. Remember not to double count an injury just because it was identified from two different sources.

	Source of Injury Data	O.I.C.—A.I.S. Body Region	Aspect	Lesion	System Organ	A.I.S. Severity	Injury Source	Injury Source Confidence Level	Direct/ Indirect Injury	Occupant Area Intrusion No.
1st	5. 1	6. C	7. C	8. R	9. A	10. 5	11. 23	12. 2	13. 1	14. 02
2nd	15. 1	16. C	17. B	18. F	19. S	20. 4	21. 20	22. 2	23. 1	24. 06
3rd	25. 1	26. H	27. U	28. F	29. S	30. 2	31. 23	32. 2	33. 1	34. 02
4th	35. 1	36. M	37. R	28. L	39. L	40. 4	41. 23	42. 2	43. 1	44. 02
5th	45. 1	46. M	47. L	48. L	49. Q	50. 2	51. 23	52. 2	53. 1	54. 02
6th	55. 1	56. F	57. U	58. A	59. I	60. 2	61. 84	62. 2	63. 1	64. 00
7th	65. 1	66. M	67. L	68. A	69. I	70. 1	71. 23	72. 2	73. 1	74. 02
8th	75. 1	76. W	77. L	78. A	79. I	80. 1	81. 84	82. 3	83. 1	84. 00
9th	85. 1	86. W	87. R	88. A	89. I	90. 1	91. 84	92. 3	93. 1	94. 00
10th	95. 1	96. B	97. U	98. L	99. I	100. 1	101. 84	102. 3	103. 1	104. 00

If greater than 10 injuries, code additional on Occupant Injury Data Supplement.

OCCUPANT INJURY DATA

	Source of Injury Data	O.I.C.—A.I.S. Body Region	Aspect	Lesion	System Organ	A.I.S. Severity	Injury Source	Injury Source Confidence Level	Direct/ Indirect Injury	Occupant Area Intrusion No.
11th	—	—	—	—	—	—	— —	—	—	— —
12th	—	—	—	—	—	—	— —	—	—	— —
13th	—	—	—	—	—	—	— —	—	—	— —
14th	—	—	—	—	—	—	— —	—	—	— —
15th	—	—	—	—	—	—	— —	—	—	— —
16th	—	—	—	—	—	—	— —	—	—	— —
17th	—	—	—	—	—	—	— —	—	—	— —
18th	—	—	—	—	—	—	— —	—	—	— —
19th	—	—	—	—	—	—	— —	—	—	— —
20th	—	—	—	—	—	—	— —	—	—	— —
21st	—	—	—	—	—	—	— —	—	—	— —
22nd	—	—	—	—	—	—	— —	—	—	— —
23rd	—	—	—	—	—	—	— —	—	—	— —

OFFICIAL INJURY DATA—SOFT TISSUE INJURIES

Indicate the *Location, Lesion, Detail* (size, depth, fracture type, head injury clinical signs and neurological deficits), and *Source* of all injuries indicated by official sources (or from PAR or other unofficial sources if medical records and interviewee data are unavailable.)

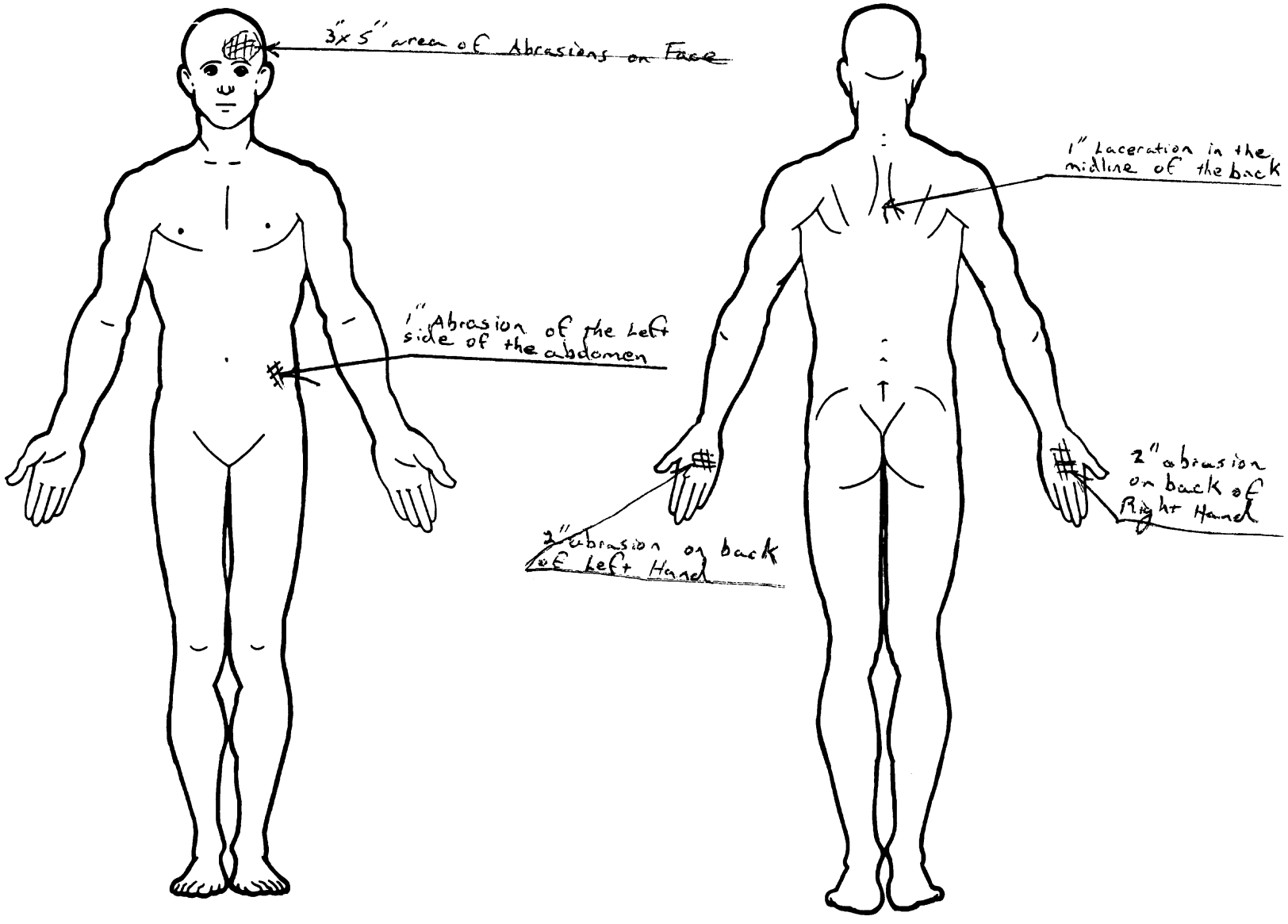

SOURCE OF INJURY DATA

OFFICIAL

(1) Autopsy records with or without hospital medical records
(2) Hospital medical records other than emergency room (eg. discharge summary)
(3) Emergency room records only (including associated X-rays or other lab reports)
(4) Private physician, walk-in or emergency clinic

UNOFFICIAL

(5) Lay coroner report
(6) E.M.S. personnel
(7) Interviewee
(8) Other source (specify): _____

(9) Police

INJURY SOURCE

FRONT

(01) Windshield
(02) Mirror
(03) Sunvisor
(04) Steering wheel rim
(05) Steering wheel hub/spoke
(06) Steering wheel (combination of codes 04 and 05)
(07) Steering column, transmission selector lever, other attachment
(08) Add-on equipment (e.g., CB, tape deck, air conditioner)
(09) Left instrument panel and below
(10) Center instrument panel and below
(11) Right instrument panel and below
(12) Glove compartment door
(13) Knee bolster
(14) Windshield including one or more of the following: front header, A-pillar, instrument panel, mirror, or steering assembly (driver side only)
(15) Windshield including one or more of the following: front header, A-pillar, instrument panel, or mirror (passenger side only)
(16) Other front object (specify): _____

LEFT SIDE

(20) Left side interior surface, excluding hardware or armrests
(21) Left side hardware or armrest
(22) Left A pillar
(23) Left B pillar
(24) Other left pillar (specify): _____

(25) Left side window glass or frame
(26) Left side window glass including one or more of the following: frame, window sill, A-pillar, B-pillar, or roof side rail
(27) Other left side object (specify): _____

RIGHT SIDE

(30) Right side interior surface, excluding hardware or armrests
(31) Right side hardware or armrest
(32) Right A pillar
(33) Right B pillar
(34) Other right pillar (specify): _____

(35) Right side window glass or frame
(36) Right side window glass including one or more of the following: frame, window sill, A-pillar, B-pillar, roof side rail
(37) Other right side object (specify): _____

INTERIOR

(40) Seat, back support
(41) Belt restraint webbing/buckle
(42) Belt restraint B-pillar attachment point
(43) Other restraint system component (specify): _____

(44) Head restraint system
(45) Air bag
(46) Other occupants (specify): _____

(47) Interior loose objects
(48) Child safety seat (specify): _____

(49) Other interior object (specify): _____

ROOF

(50) Front header
(51) Rear header
(52) Roof left side rail
(53) Roof right side rail
(54) Roof or convertible top

FLOOR

(56) Floor including toe pan
(57) Floor or console mounted transmission lever, including console
(58) Parking brake handle
(59) Foot controls including parking brake

REAR

(60) Backlight (rear window)
(61) Backlight storage rack, door, etc.
(62) Other rear object (specify): _____

EXTERIOR OF OCCUPANT'S VEHICLE

(65) Hood
(66) Outside hardware (e.g., outside mirror, antenna)
(67) Other exterior surface or tires (specify): _____

(68) Unknown exterior objects

EXTERIOR OF OTHER MOTOR VEHICLE

(70) Front bumper
(71) Hood edge
(72) Other front of vehicle (specify): _____

(73) Hood
(74) Hood ornament
(75) Windshield, roof rail, A-pillar
(76) Side surface
(77) Side mirrors
(78) Other side protrusions (specify): _____

(79) Rear surface
(80) Undercarriage
(81) Tires and wheels
(82) Other exterior of other motor vehicle (specify): _____

(83) Unknown exterior of other motor vehicle

OTHER VEHICLE OR OBJECT IN THE ENVIRONMENT

(84) Ground
(85) Other vehicle or object (specify) _____

(86) Unknown vehicle or object

NONCONTACT INJURY

(90) Fire in vehicle
(91) Flying glass
(92) Other noncontact injury source (specify) _____

(97) Injured, unknown source

INJURY SOURCE CONFIDENCE LEVEL

(1) Certain
(2) Probable
(3) Possible
(9) Unknown

DIRECT/INDIRECT INJURY

(1) Direct contact injury
(2) Indirect contact injury
(3) Noncontact injury
(7) Injured, unknown source

OCCUPANT INJURY CLASSIFICATION

O.I.C. Body Region

(M) Abdomen
(Q) Ankle–foot
(A) Arm (upper)
(B) Back–thoracolumbar spine
(C) Chest
(E) Elbow
(F) Face
(R) Forearm
(H) Head–skull
(U) Injured, unknown region
(K) Knee
(L) Leg (lower)
(Y) Lower limb(s) (whole or unknown part)
(N) Neck–cervical spine
(P) Pelvic–hip
(S) Shoulder
(T) Thigh
(X) Upper limb(s) (whole or unknown part)
(O) Whole body
(W) Wrist–hand

Aspect of Injury

(A) Anterior–front
(B) Bilateral (rib fracture only).
(C) Central
(I) Inferior–lower
(U) Injured, unknown aspect
(L) Left
(P) Posterior–back
(R) Right
(S) Superior–upper
(W) Whole region

Lesion

(A) Abrasion
(M) Amputation
(V) Avulsion
(B) Burn
(K) Concussion
(C) Contusion
(N) Crush
(G) Detachment, separation
(D) Dislocation
(F) Fracture
(Z) Fracture and dislocation
(U) Injured, unknown lesion
(L) Laceration
(O) Other
(P) Perforation, puncture
(R) Rupture
(S) Sprain
(T) Strain
(E) Total severance, transection

System/Organ

(W) All systems in region
(A) Arteries–veins
(B) Brain
(D) Digestive
(E) Ears
(O) Eye
(H) Heart
(U) Injured, unknown system
(I) Integumentary
(J) Joints
(K) Kidneys
(L) Liver
(M) Muscles
(N) Nervous system
(P) Pulmonary–lungs
(R) Respiratory
(S) Skeletal
(C) Spinal cord
(Q) Spleen
(T) Thyroid, other endocrine gland
(G) Urogenital
(V) Vertebrae

Abbreviated Injury Scale

(1) Minor injury
(2) Moderate injury
(3) Serious injury
(4) Severe injury
(5) Critical injury
(6) Maximum (untreatable)
(7) Injured, unknown severity

OFFICIAL INJURY DATA—SKELETAL INJURIES

Indicate the *Location, Lesion, Detail* (size, depth, fracture type, head injury clinical signs and neurological deficits), and *Source* of all injuries indicated by official sources (or from PAR or other unofficial sources if medical records and interviewee data are unavailable.)

Bilateral hinge fracture of the skull with 25 ccs of subarachnoid hemorrhage

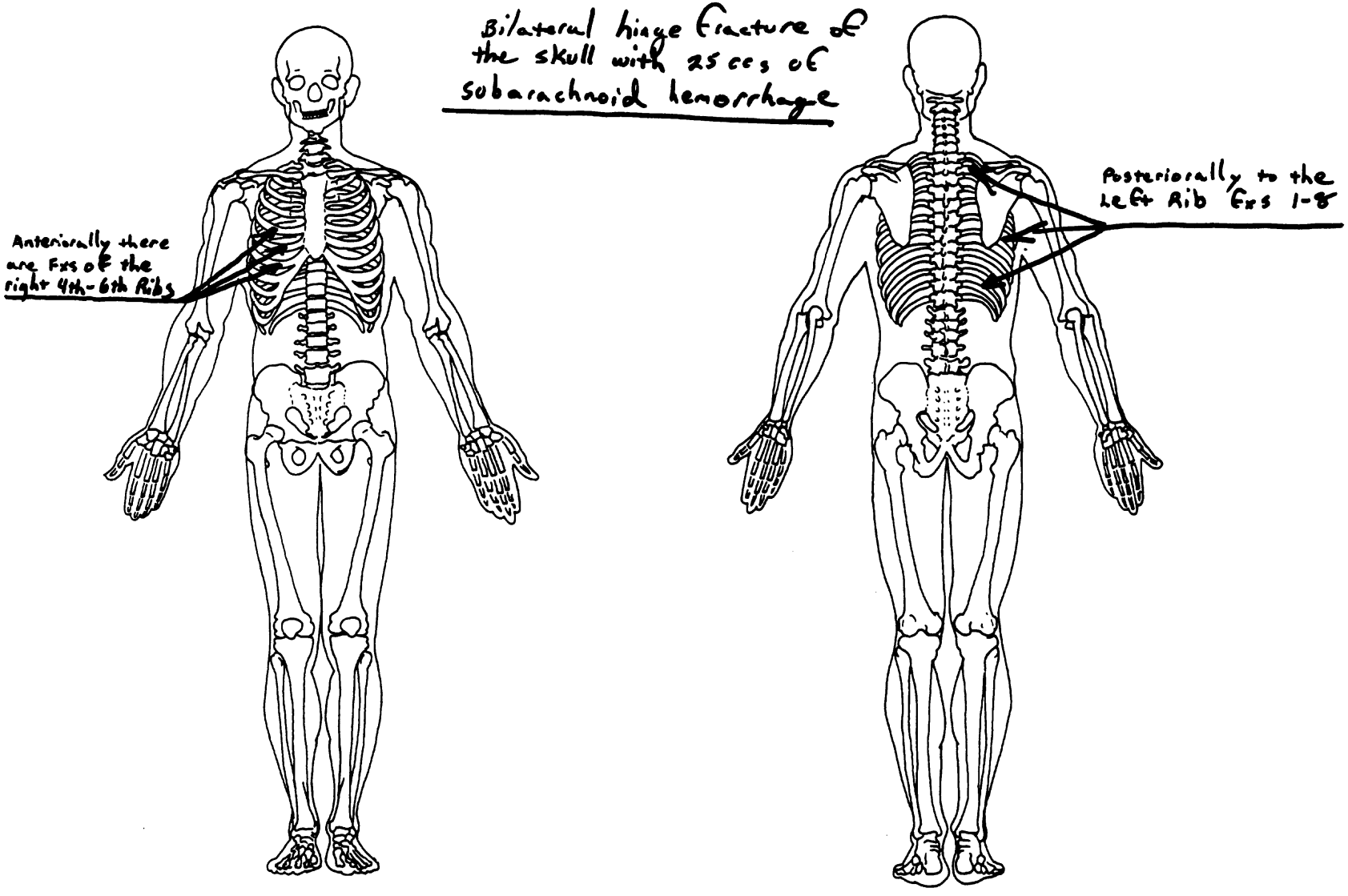

OFFICIAL INJURY DATA – INTERNAL INJURIES

Indicate the *Location, Lesion, Detail* (size, depth, fracture type, head injury clinical signs and neurological deficits), and *Source* of all injuries indicated by official sources (or from PAR or other unofficial sources if medical records and interviewee data are unavailable.)

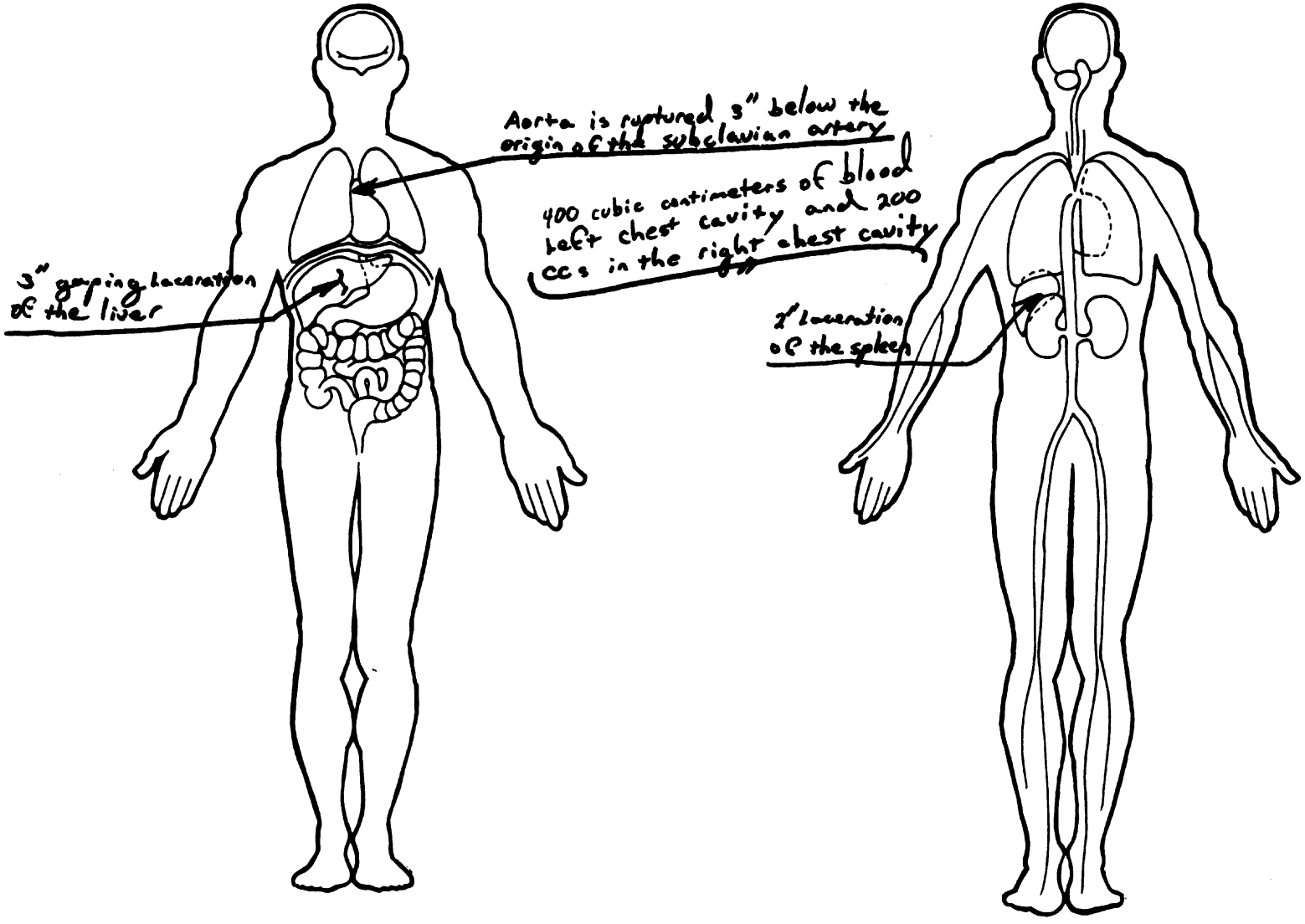

PSU NUMBER 42

CASE NUMBER 080A

VEHICLE NUMBER 02

OCCUPANT NUMBER 02

OCCUPANT INJURY FORM

THE FOLLOWING DATA IS NOT INCLUDED IN THIS CASE:

[✓] ENTIRE FORM

[] PAGE NUMBER (S) _____

PSU NUMBER 42

CASE NUMBER 080A

VEHICLE NUMBER 02

OCCUPANT NUMBER 03

OCCUPANT INJURY FORM

THE FOLLOWING DATA IS NOT INCLUDED IN THIS CASE:

[✓] ENTIRE FORM

[] PAGE NUMBER (S) _____

U.S. Department of Transportation
National Highway Traffic Safety Administration

UPDATE FORM

NATIONAL ACCIDENT SAMPLING SYSTEM
CRASHWORTHINESS DATA SYSTEM

1. Primary Sampling Unit Number 42
2. Case Number – Stratum 0830A
3. Vehicle Number 02
4. Occupant Number 03

[redacted] 1991.

Driver or Occupant Name: _____

Address: _____

Other Information: _____

(Sanitize this section prior to Update submission.)

INJURY DATA CODED ON INITIAL SUBMISSION

	Source of Injury Data	O.I.C.–A.I.S. Body Region	Aspect	Lesion	System Organ	A.I.S. Severity	Injury Source	Injury Source Confidence Level	Direct/ Indirect Injury	Occupant Area Intrusion No.
1st	5.	6.	7.	8.	9.	10.	11.	12.	13.	14.
2nd	15.	16.	17.	18.	19.	20.	21.	22.	23.	24.
3rd	25.	26.	27.	28.	29.	30.	31.	32.	33.	34.
4th	35.	36.	37.	38.	39.	40.	41.	42.	43.	44.
5th	45.	46.	47.	48.	49.	50.	51.	52.	53.	54.
6th	55.	56.	57.	58.	59.	60.	61.	62.	63.	64.
7th	65.	66.	67.	68.	69.	70.	71.	72.	73.	74.
8th	75.	76.	77.	78.	79.	80.	81.	82.	83.	84.
9th	85.	86.	87.	88.	89.	90.	91.	92.	93.	94.
10th	95.	96.	97.	98.	99.	100.	101.	102.	103.	104.

NOTE: If necessary, keep copy of original Occupant Injury form and submit as part of update.

UPDATED CASE INFORMATION

	INITIAL SUBMISSION	FINAL
GV12. Alcohol Test Results for Driver	96	96
OA05. Occupant's Age	27	27
OA06. Occupant's Sex	2	2
OA07. Occupant's Height	63	63
OA08. Occupant's Weight	209	209
OA17. Manual (Active) Belt System Availability	4	4
OA18. Manual (Active) Belt System Use	00	00
OA21. Automatic (Passive) Restraint System Availability	0	0
OA22. Automatic (Passive) Restraint Function	0	0

	INITIAL SUBMISSION	FINAL
OA35. Treatment – Mortality	1	1
OA36. Type of Medical Facility (for Initial Treatment)	0	0
OA37. Hospital Stay	00	00
OA38. Working Days Lost	62	62
OA39. Time to Death	01	01
OA40. 1st Medically Reported Cause of Death	99	99
OA41. 2nd Medically Reported Cause of Death	00	00
OA42. 3rd Medically Reported Cause of Death	00	00
OA43. Number of Recorded Injuries for This Occupant	97	14

HS Form 433C (Rev. 1/90)

INJURY DATA

Record below the actual injuries sustained by this occupant that were identified from the unofficial and official prior to initial case submission **and from subsequently** acquired medical data. Remember not to double count an injury just because it was identified from two different sources.

	Source of Injury Data	O.I.C.—A.I.S. Body Region	Aspect	Lesion	System Organ	A.I.S. Severity	Injury Source	Injury Source Confidence Level	Direct/ Indirect Injury	Occupant Area Intrusion No.
1st	5. 1	6. C	7. R	8. A	9. I	10. 1	11. 84	12. 3	13. 1	14. 00
2nd	15. 1	16. M	17. W	18. A	19. I	20. 2	21. 20	22. 3	23. 1	24. 03
3rd	25. 1	26. K	27. L	28. C	29. I	30. 1	31. 84	32. 3	33. 1	34. 00
4th	35. 1	36. W	37. L	28. C	39. I	40. 1	41. 84	42. 3	43. 1	44. 00
5th	45. 1	46. H	47. A	48. F	49. S	50. 2	51. 52	52. 3	53. 1	54. 08
6th	55. 1	56. C	57. B	58. F	59. S	60. 4	61. 20	62. 3	63. 1	64. 03
7th	65. 1	66. Q	67. L	68. F	69. S	70. 2	71. 97	72. 9	73. 7	74. 99
8th	75. 1	76. N	77. P	78. D	79. V	80. 2	81. 52	82. 3	83. 2	84. 08
9th	85. 1	86. N	87. P	88. L	89. C	90. 6	91. 52	92. 3	93. 2	94. 08
10th	95. 1	96. H	97. U	98. U	99. B	100. 3	101. 52	102. 3	103. 1	104. 08

If greater than 10 injuries, code additional on Occupant Injury Data Supplement.

OCCUPANT INJURY DATA

	Source of Injury Data	O.I.C.—A.I.S. Body Region	Aspect	Lesion	System Organ	A.I.S. Severity	Injury Source	Injury Source Confidence Level	Direct/ Indirect Injury	Occupant Area Intrusion No.
11th	1	C	C	R	A	5	20	3	1	03
12th	1	M	R	L	L	2	20	3	1	03
13th	1	M	L	L	Q	2	20	3	1	03
14th	1	Y	R	C	I	1	84	3	1	00
15th	—	—	—	—	—	—	— —	—	—	— —
16th	—	—	—	—	—	—	— —	—	—	— —
17th	—	—	—	—	—	—	— —	—	—	— —
18th	—	—	—	—	—	—	— —	—	—	— —
19th	—	—	—	—	—	—	— —	—	—	— —
20th	—	—	—	—	—	—	— —	—	—	— —
21st	—	—	—	—	—	—	— —	—	—	— —
22nd	—	—	—	—	—	—	— —	—	—	— —
23rd	—	—	—	—	—	—	— —	—	—	— —

OFFICIAL INJURY DATA—SOFT TISSUE INJURIES

Indicate the *Location, Lesion, Detail* (size, depth, fracture type, head injury clinical signs and neurological deficits), and *Source* of all injuries indicated by official sources (or from PAR or other unofficial sources if medical records and interviewee data are unavailable.)

ALL INJURIES OBTAINED from AN INVASIVE AUTOPSY.

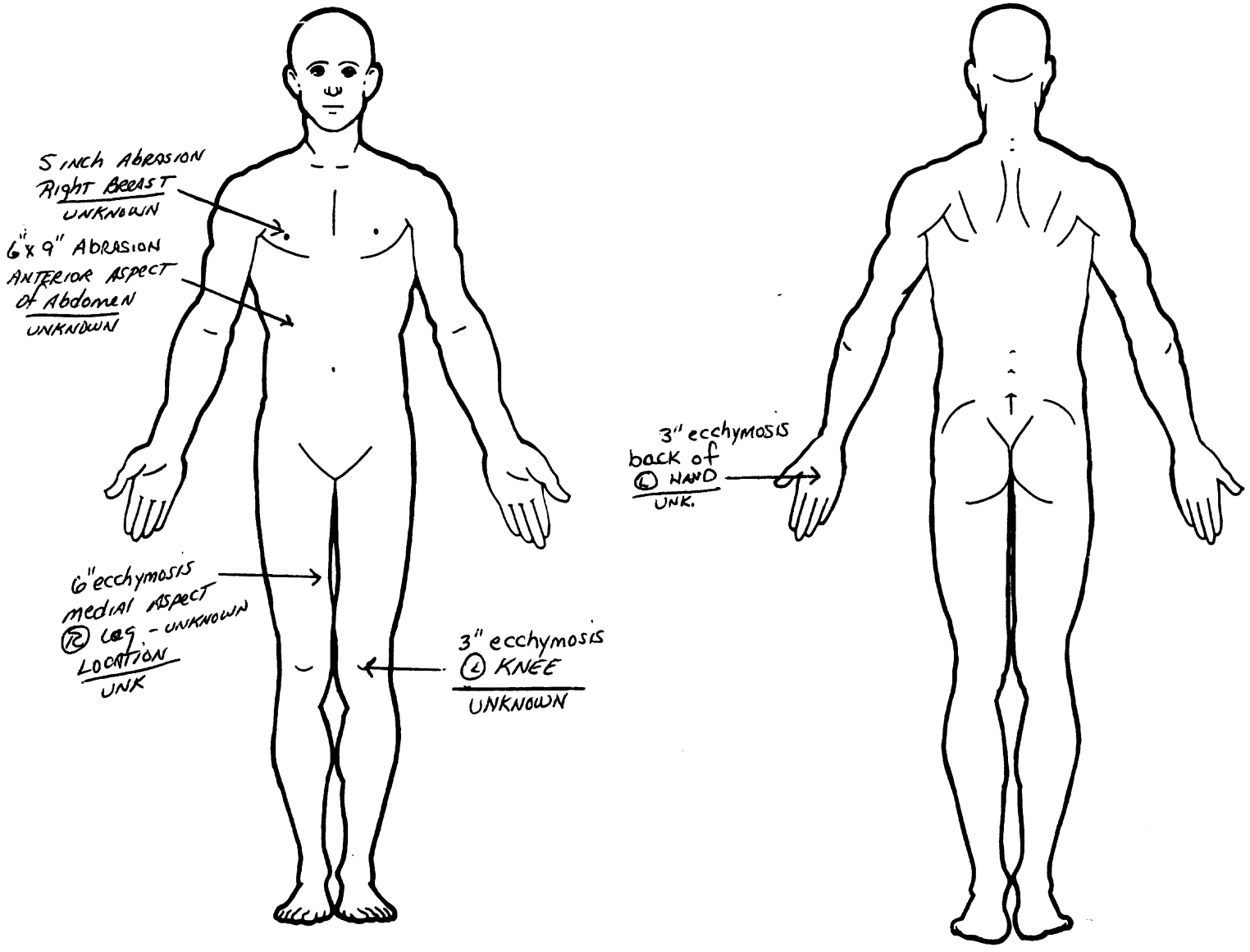

SOURCE OF INJURY DATA

OFFICIAL

(1) Autopsy records with or without hospital medical records
(2) Hospital medical records other than emergency room (eg. discharge summary)
(3) Emergency room records only (including associated X-rays or other lab reports)
(4) Private physician, walk-in or emergency clinic

UNOFFICIAL

(5) Lay coroner report
(6) E.M.S. personnel
(7) Interviewee
(8) Other source (specify): _____
(9) Police

INJURY SOURCE

FRONT

(01) Windshield
(02) Mirror
(03) Sunvisor
(04) Steering wheel rim
(05) Steering wheel hub/spoke
(06) Steering wheel (combination of codes 04 and 05)
(07) Steering column, transmission selector lever, other attachment
(08) Add-on equipment (e.g., CB, tape deck, air conditioner)
(09) Left instrument panel and below
(10) Center instrument panel and below
(11) Right instrument panel and below
(12) Glove compartment door
(13) Knee bolster
(14) Windshield including one or more of the following: front header, A-pillar, instrument panel, mirror, or steering assembly (driver side only)
(15) Windshield including one or more of the following: front header, A-pillar, instrument panel, or mirror (passenger side only)
(16) Other front object (specify): _____

LEFT SIDE

(20) Left side interior surface, excluding hardware or armrests
(21) Left side hardware or armrest
(22) Left A pillar
(23) Left B pillar
(24) Other left pillar (specify): _____
(25) Left side window glass or frame
(26) Left side window glass including one or more of the following: frame, window sill, A-pillar, B-pillar, or roof side rail
(27) Other left side object (specify): _____

RIGHT SIDE

(30) Right side interior surface, excluding hardware or armrests
(31) Right side hardware or armrest
(32) Right A pillar
(33) Right B pillar
(34) Other right pillar (specify): _____
(35) Right side window glass or frame
(36) Right side window glass including one or more of the following: frame, window sill, A-pillar, B-pillar, roof side rail
(37) Other right side object (specify): _____

INTERIOR

(40) Seat, back support
(41) Belt restraint webbing/buckle
(42) Belt restraint B-pillar attachment point
(43) Other restraint system component (specify): _____
(44) Head restraint system
(45) Air bag
(46) Other occupants (specify): _____
(47) Interior loose objects
(48) Child safety seat (specify): _____
(49) Other interior object (specify): _____

ROOF

(50) Front header
(51) Rear header
(52) Roof left side rail
(53) Roof right side rail
(54) Roof or convertible top

FLOOR

(56) Floor including toe pan
(57) Floor or console mounted transmission lever, including console
(58) Parking brake handle
(59) Foot controls including parking brake

REAR

(60) Backlight (rear window)
(61) Backlight storage rack, door, etc.
(62) Other rear object (specify): _____

EXTERIOR OF OCCUPANT'S VEHICLE

(65) Hood
(66) Outside hardware (e.g., outside mirror, antenna)
(67) Other exterior surface or tires (specify): _____
(68) Unknown exterior objects

EXTERIOR OF OTHER MOTOR VEHICLE

(70) Front bumper
(71) Hood edge
(72) Other front of vehicle (specify): _____
(73) Hood
(74) Hood ornament
(75) Windshield, roof rail, A-pillar
(76) Side surface
(77) Side mirrors
(78) Other side protrusions (specify): _____
(79) Rear surface
(80) Undercarriage
(81) Tires and wheels
(82) Other exterior of other motor vehicle (specify): _____
(83) Unknown exterior of other motor vehicle

OTHER VEHICLE OR OBJECT IN THE ENVIRONMENT

(84) Ground
(85) Other vehicle or object (specify) _____
(86) Unknown vehicle or object

NONCONTACT INJURY

(90) Fire in vehicle
(91) Flying glass
(92) Other noncontact injury source (specify) _____
(97) Injured, unknown source

INJURY SOURCE CONFIDENCE LEVEL

(1) Certain
(2) Probable
(3) Possible
(9) Unknown

DIRECT/INDIRECT INJURY

(1) Direct contact injury
(2) Indirect contact injury
(3) Noncontact injury
(7) Injured, unknown source

OCCUPANT INJURY CLASSIFICATION

O.I.C. Body Region

(M) Abdomen
(Q) Ankle–foot
(A) Arm (upper)
(B) Back–thoracolumbar spine
(C) Chest
(E) Elbow
(F) Face
(R) Forearm
(H) Head–skull
(U) Injured, unknown region
(K) Knee
(L) Leg (lower)
(Y) Lower limb(s) (whole or unknown part)
(N) Neck–cervical spine
(P) Pelvic–hip
(S) Shoulder
(T) Thigh
(X) Upper limb(s) (whole or unknown part)
(O) Whole body
(W) Wrist–hand

Aspect of Injury

(A) Anterior–front
(B) Bilateral (rib fracture only).
(C) Central
(I) Inferior–lower
(U) Injured, unknown aspect
(L) Left
(P) Posterior–back
(R) Right
(S) Superior–upper
(W) Whole region

Lesion

(A) Abrasion
(M) Amputation
(V) Avulsion
(B) Burn
(K) Concussion
(C) Contusion
(N) Crush
(G) Detachment, separation
(D) Dislocation
(F) Fracture
(Z) Fracture and dislocation
(U) Injured, unknown lesion
(L) Laceration
(O) Other
(P) Perforation, puncture
(R) Rupture
(S) Sprain
(T) Strain
(E) Total severance, transection

System/Organ

(W) All systems in region
(A) Arteries–veins
(B) Brain
(D) Digestive
(E) Ears
(O) Eye
(H) Heart
(U) Injured, unknown system
(I) Integumentary
(J) Joints
(K) Kidneys
(L) Liver
(M) Muscles
(N) Nervous system
(P) Pulmonary–lungs
(R) Respiratory
(S) Skeletal
(C) Spinal cord
(Q) Spleen
(T) Thyroid, other endocrine gland
(G) Urogenital
(V) Vertebrae

Abbreviated Injury Scale

(1) Minor injury
(2) Moderate injury
(3) Serious injury
(4) Severe injury
(5) Critical injury
(6) Maximum (untreatable)
(7) Injured, unknown severity

OFFICIAL INJURY DATA—SKELETAL INJURIES

Indicate the *Location, Lesion, Detail* (size, depth, fracture type, head injury clinical signs and neurological deficits), and *Source* of all injuries indicated by official sources (or from PAR or other unofficial sources if medical records and interviewee data are unavailable.)

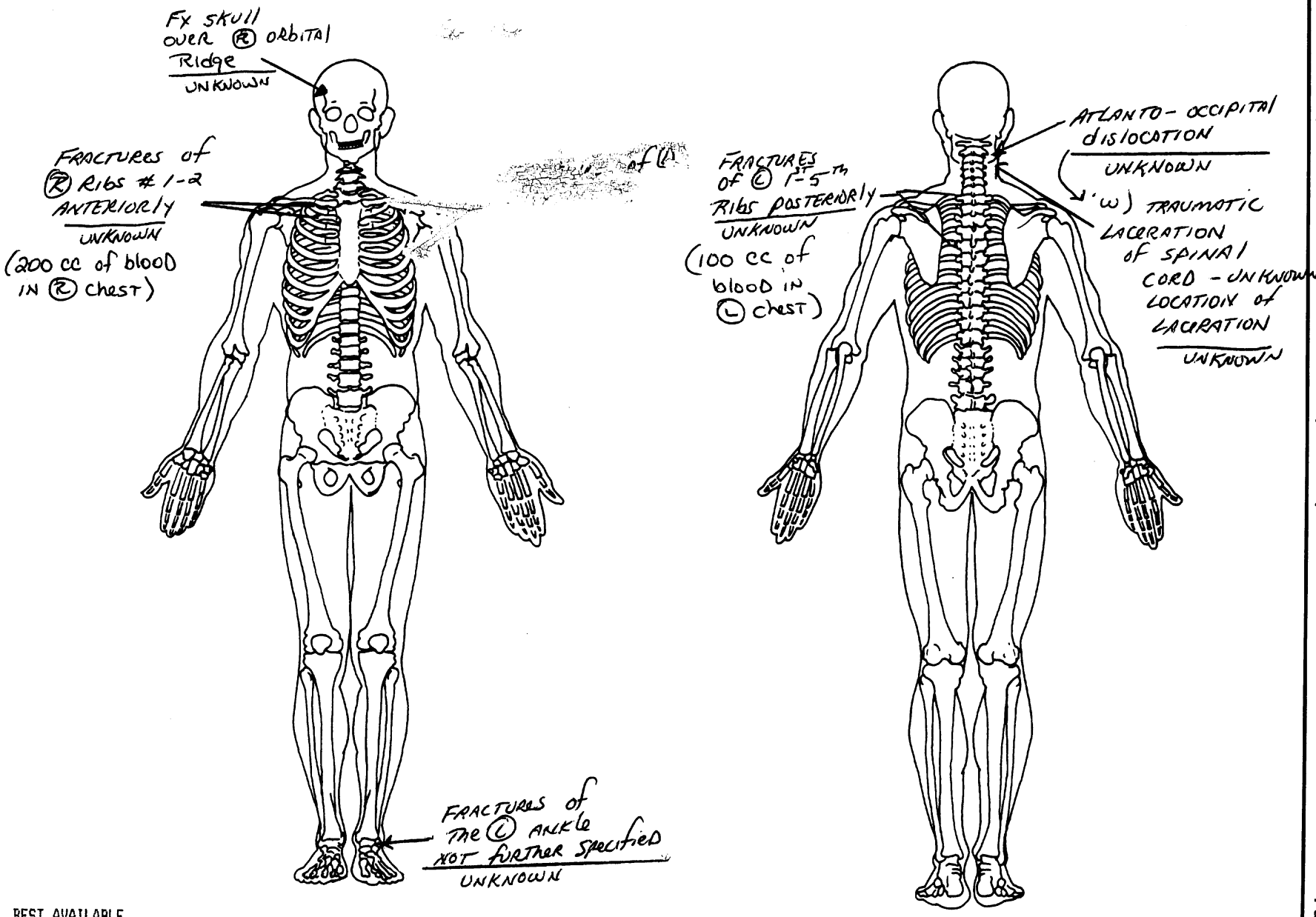

BEST AVAILABLE

OFFICIAL INJURY DATA – INTERNAL INJURIES

Indicate the *Location, Lesion, Detail* (size, depth, fracture type, head injury clinical signs and neurological deficits), and *Source* of all injuries indicated by official sources (or from PAR or other unofficial sources if medical records and interviewee data are unavailable.)

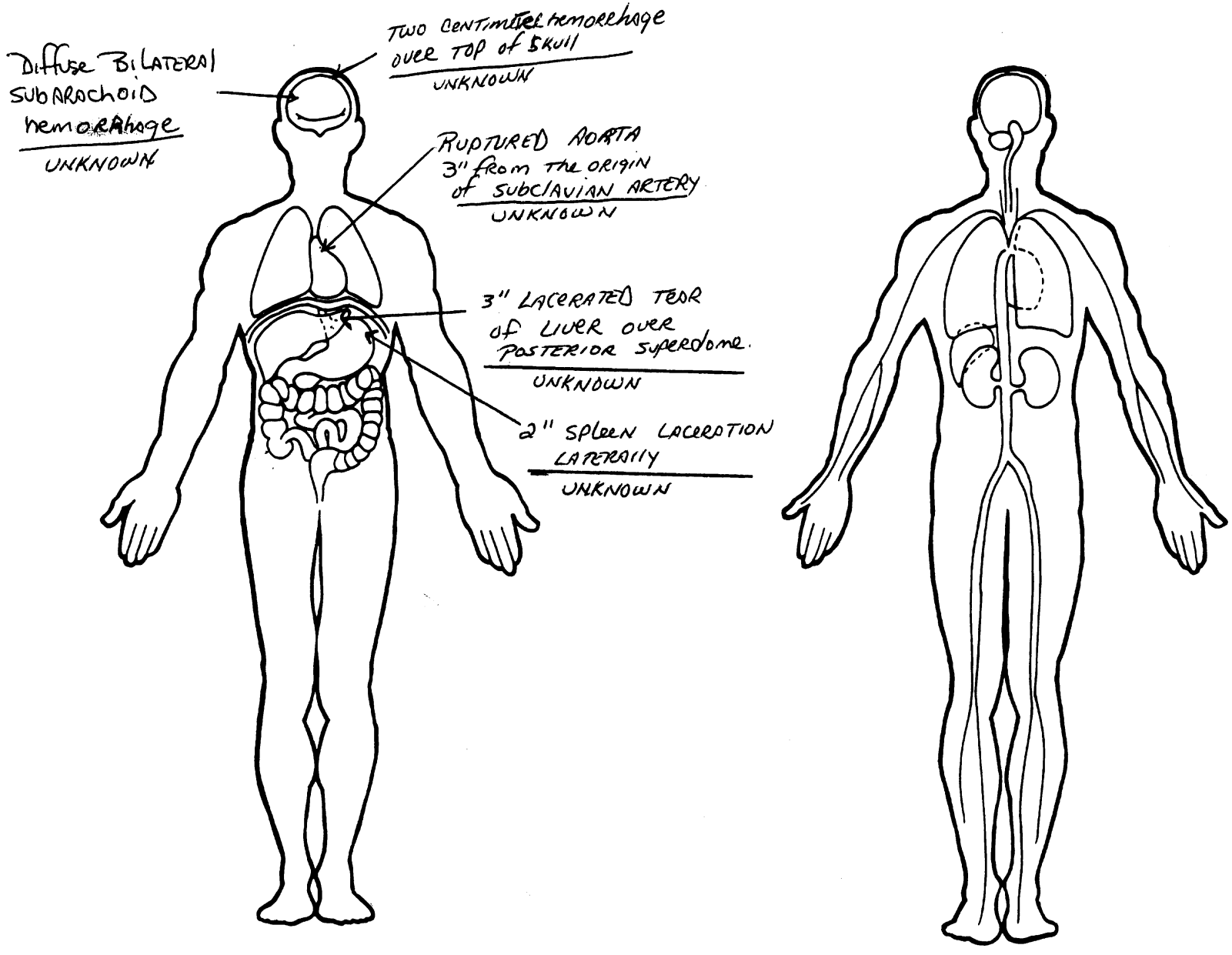

U.S. Department of Transportation
National Highway Traffic Safety Administration

EXTERIOR VEHICLE FORM

NATIONAL ACCIDENT SAMPLING SYSTEM
CRASHWORTHINESS DATA SYSTEM

1. Primary Sampling Unit Number: 42	3. Vehicle Number: 03
2. Case Number–Stratum: 080 A	

VEHICLE IDENTIFICATION

VIN 1NXAE94A2LZ[redacted] Model Year 1990

Vehicle Make (specify): Toyota Vehicle Model (specify): Corolla

LOCATOR

Locate the end of the damage with respect to the vehicle longitudinal center line or bumper corner for end impacts or an undamaged axle for side impacts.

Specific Impact No.	Location of Direct Damage	Location of Field L
01	Bumper corner to bumper corner (front)	entire frontal plane

max crush C1

CRUSH PROFILE

NOTES: Identify the plane at which the C-measurements are taken (e.g., at bumper, above bumper, at sill, above sill, etc.) and label adjustments (e.g., free space).

Measure and document on the vehicle diagram the location of maximum crush. 11.3

Measure C1 to C6 from driver to passenger side in front or rear impacts and rear to front in side impacts.

Frontal plane Measured

Free space value is defined as the distance between the baseline and the original body contour taken at the individual C locations. This may include the following: bumper lead, bumper taper, side protrusion, side taper, etc. Record the value for each C-measurement and maximum crush.

Use as many lines/columns as necessary to describe each damage profile.

Specific Impact Number	Plane of C-Measurements	Direct Damage Width (CDC)	Direct Damage Max Crush	Field L	C_1	C_2	C_3	C_4	C_5	C_6	±D
01	front bumper	56.5	12.25	56.5	15.75	8.25	5.45	3.45	2.25	4.2	00
	ESTIMATED F/S	—	3		3	1.25	.25	.25	1.25	3	0
	CORRECTED	56.5	12.25	56.5	12.25	7.0	5.2	3.2	1.	1.2	Ø

HS Form 435A
1/89

VEHICLE DAMAGE SKETCH

TIRE—WHEEL DAMAGE

a. Rotation physically restricted		b. Tire deflated	
RF	2	RF	2
LF	1	LF	1
RR	2	RR	2
LR	2	LR	2

(1) Yes (2) No (8) NA (9) Unk.

TYPE OF TRANSMISSION

☐ Manual ☑ Automatic

ORIGINAL SPECIFICATIONS

Wheelbase	95.7
Overall Length	170.3
Maximum Width	65.2
Curb Weight	2390
Average Track	56.3/55.5
Front Overhang	
Rear Overhang	
Engine Size: cyl./ displ.	4cl/1.6 l
Undeformed End Width	

WHEEL STEER ANGLES
(For locked front wheels or displaced rear axles only)

RF ± ___ ___ °
LF ± ___ ___ ° see slides
RR ± ___ ___ °
LR ± ___ ___ °
Within ±5 degrees

DRIVE WHEELS

☑ FWD ☐ RWD ☐ 4WD

Approximate Cargo Weight 6.0

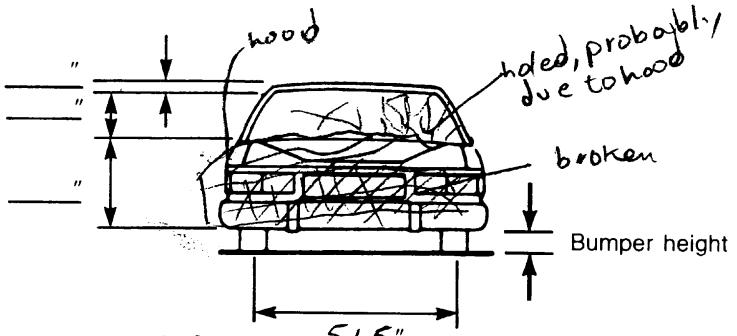

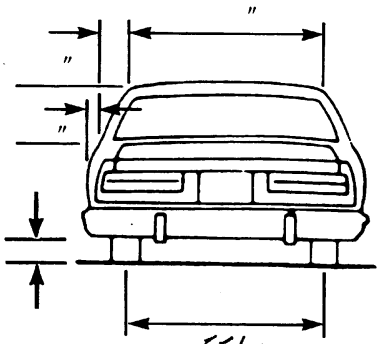

rear bumper = 5" wide
front stands set @ 165.3"
forward of end of vehicle (not bumper)
due to lack of space
Note: No need for stand adjustment

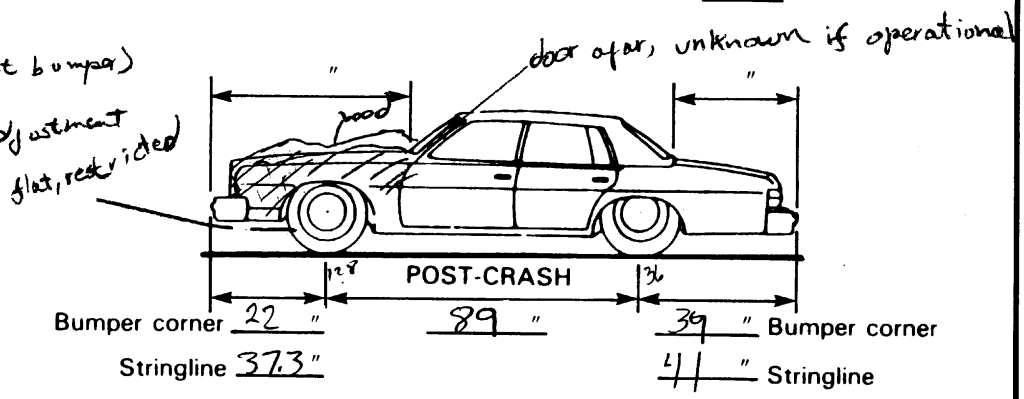

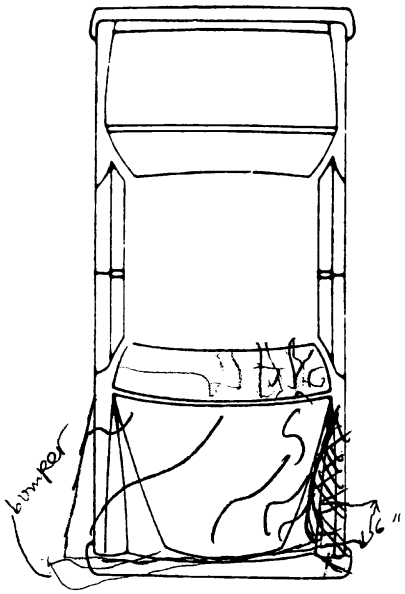

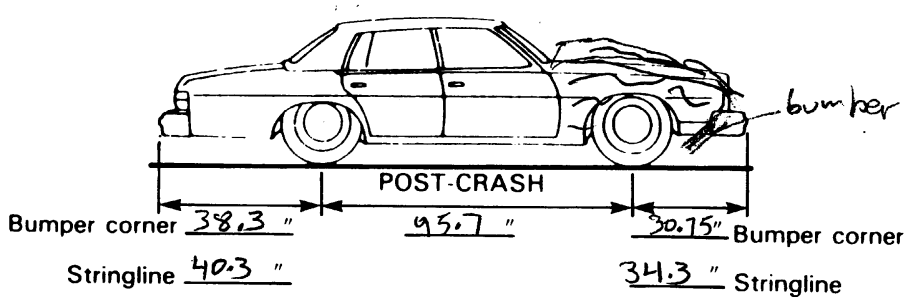

NOTES: Sketch new perimeter and cross hatch direct damage and single hatch induced damage on all views. Annotate observations which might be useful in reconstructing the accident (e.g., grass in tire bead, direction of striations, scuff on sidewall, etc.). If pulling trailer, sketch type of trailer and damage received on the back of this page.
Annotate any damage caused by extrication such as component removal by torching, prying, or hydraulic shears.

CDC WORKSHEET

CODES FOR OBJECT CONTACTED

01-30—Vehicle Number

Noncollision
- (31) Overturn—rollover
- (32) Fire or explosion
- (33) Jackknife
- (34) Other intraunit damage (specify): _____
- (35) Noncollision injury
- (38) Other noncollision (specify): _____
- (39) Noncollision—details unknown

Collision with Fixed Object
- (41) Tree (≤4 inches in diameter)
- (42) Tree (>4 inches in diameter)
- (43) Shrubbery or bush
- (44) Embankment
- (45) Breakaway pole or post (any diameter)

Nonbreakaway Pole or Post
- (50) Pole or post (≤4 inches in diameter)
- (51) Pole or post (>4 but ≤12 inches in diameter)
- (52) Pole or post (>12 inches in diameter)
- (53) Pole or post (diameter unknown)
- (54) Concrete traffic barrier
- (55) Impact attenuator
- (56) Other traffic barrier (specify): _____
- (57) Fence
- (58) Wall
- (59) Building
- (60) Ditch or Culvert
- (61) Ground
- (62) Fire hydrant
- (63) Curb
- (64) Bridge
- (68) Other fixed object (specify): _____
- (69) Unknown fixed object

Collision With Nonfixed Object
- (71) Motor vehicle not in transport
- (72) Pedestrian
- (73) Cyclist or cycle
- (74) Other nonmotorist or conveyance (specify): _____
- (75) Vehicle occupant
- (76) Animal
- (77) Train
- (78) Trailer, disconnected in transport
- (88) Other nonfixed object (specify): _____
- (89) Unknown nonfixed object
- (98) Other event (specify): _____
- (99) Unknown event or object

DEFORMATION CLASSIFICATION BY EVENT NUMBER

Accident Event Sequence Number	Object Contacted	(1) (2) Direction of Force (degrees)	Incremental Value of Shift	(3) Deformation Location	(4) Specific Longitudinal or Lateral Location	(5) Specific Vertical or Lateral Location	(6) Type of Damage Distribution	(7) Deformation Extent
02	01	330		~~F~~ L	~~D~~ Y	~~E~~ A	~~W~~ W	~~02~~ 03 pt. defined
04	52	000		F	L	E	N	01

US Department of Transportation
National Highway Traffic Safety Administration

INTERIOR VEHICLE FORM

NATIONAL ACCIDENT SAMPLING SYSTEM
CRASHWORTHINESS DATA SYSTEM

1. Primary Sampling Unit Number 42
2. Case Number–Stratum 020 A
3. Vehicle Number 03

INTEGRITY

4. Passenger Compartment Integrity 00

(00) No integrity loss

Yes, Integrity Was Lost Through
(01) Windshield
(02) Door (side)
(03) Door/hatch (rear)
(04) Roof
(05) Roof glass
(06) Side window
(07) Rear window
(08) Roof and roof glass
(09) Windshield and door (side)
(10) Windshield and roof
(11) Side and rear window
(12) Windshield and side window
(13) Door and side window
(98) Other combination of above (specify): _____
(99) Unknown

Door, Tailgate Or Hatch Opening

5. LF 1 6. RF 1 7. LR 1 8. RR 1 9. TG/H 0

(0) No door/gate/hatch
(1) Door/gate/hatch remained closed and operational
(2) Door/gate/hatch came open during collision
(3) Door/gate/hatch jammed shut
(8) Other (specify): _____
(9) Unknown

Damage/Failure Associated with Door, Tailgate or Hatch Opening in Collision. If IV05-IV09 ≠ 2, Then Code 0.

10. LF 0 11. RF 0 12. LR 0 13. RR 0 14. TG/H 0

(0) No door/gate/hatch or door not opened

Door, Tailgate, or Hatch Came Open During Collision
(1) Door operational (no damage)
(2) Latch/striker failure due to damage
(3) Hinge failure due to damage
(4) Door structure failure due to damage
(5) Door support (i.e., pillar, sill, roof side rail, etc.) failure due to damage
(6) Latch/striker and hinge failure due to damage
(8) Other failure (specify): _____
(9) Unknown

GLAZING

Glazing Damage from Impact Forces

15. WS 2 16. LF 0 17. RF 0 18. LR 0 19. RR 0
20. BL 0 21. Roof 0 22. Other 0

(0) No glazing damage from impact forces
(2) Glazing in place and cracked from impact forces
(3) Glazing in place and holed from impact forces
(4) Glazing out-of-place (cracked or not) and not holed from impact forces
(5) Glazing out-of-place and holed from impact forces
(6) Glazing disintegrated from impact forces
(7) Glazing removed prior to accident
(8) No glazing
(9) Unknown if damaged

Glazing Damage from Occupant Contact

23. WS 0 24. LF 1 25. RF 0 26. LR 0 27. RR 0
28. BL 0 29. Roof 0 30. Other 0

(0) No occupant contact to glazing or no glazing
(1) Glazing contacted by occupant but no glazing damage
(2) Glazing in place and cracked by occupant contact
(3) Glazing in place and holed by occupant contact
(4) Glazing out-of-place (cracked or not) by occupant contact and not holed by occupant contact
(5) Glazing out-of-place by occupant contact and holed by occupant contact
(6) Glazing disintegrated by occupant contact
(9) Unknown if contacted by occupant

If No Glazing Damage ***And*** No Occupant Contact or No Glazing, Then Code IV 31 Through IV 46 As 0

Type of Window/Windshield Glazing

31. WS 1 32. LF 2 33. RF 0 34. LR 0 35. RR 0
36. BL 0 37. Roof 0 38. Other 0

(0) No glazing contact and no damage, or no glazing
(1) AS-1 – Laminated
(2) AS-2 – Tempered
(3) AS-3 – Tempered-tinted
(4) AS-14 – Glass/Plastic
(8) Other (specify): _____
(9) Unknown

Window Precrash Glazing Status

39. WS 1 40. LF 2 41. RF 0 42. LR 0 43. RR 0
44. BL 0 45. Roof 0 46. Other 0

(0) No glazing contact and no damage, or no glazing
(1) Fixed
(2) Closed
(3) Partially opened
(4) Fully opened
(9) Unknown

INTRUSION WORK SHEET

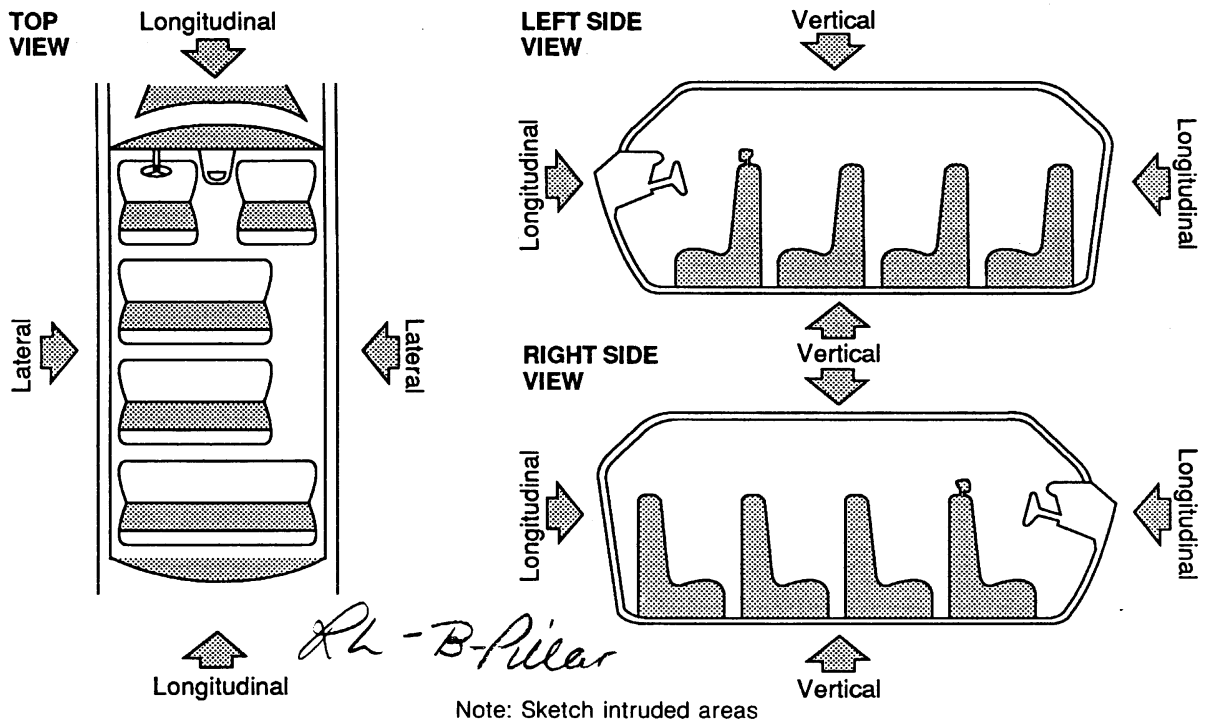

Note: Sketch intruded areas

LOCATION OF INTRUSION	INTRUDED COMPONENT	COMPARISION VALUE	–	INTRUDED VALUE	=	INTRUSION	DOMINANT CRUSH DIRECTION
11	Windshield	38.0	–	33.1	=	4.9	long
	Hood		–		=		
	Est. taken		–		=		
	from glazing	pattern			=		
			–		=		
			–		=		
			–		=		
			–		=		
			–		=		
			–		=		
			–		=		
			–		=		
			–		=		
			–		=		
			–		=		

Document no more than the 15 most severe intrusions

OCCUPANT AREA INTRUSION

Note: If no intrusions, leave variables IV 47-IV 86 blank.

	Location of Intrusion	Intruding Component	Magnitude of Intrusion	Dominant Crush Direction
1st	47. 1 1	48. 1 4	49. 2	50. 2
2nd	51.	52.	53.	54.
3rd	55.	56.	57.	58.
4th	59.	60.	61.	62.
5th	63.	64.	65.	66.
6th	67.	68.	69.	70.
7th	71.	72.	73.	74.
8th	75.	76.	77.	78.
9th	79.	80.	81.	82.
10th	83.	84.	85.	86.

LOCATION OF INTRUSION

Front Seat
(11) Left
(12) Middle
(13) Right

Second Seat
(21) Left
(22) Middle
(23) Right

Third Seat
(31) Left
(32) Middle
(33) Right

Fourth Seat
(41) Left
(42) Middle
(43) Right

(97) Catastrophic
(98) Other enclosed area (specify): _____
(99) Unknown

INTRUDING COMPONENT

Interior Components
(01) Steering assembly
(02) Instrument panel left
(03) Instrument panel center
(04) Instrument panel right
(05) Toe pan
(06) A-pillar
(07) B-pillar
(08) C-pillar
(09) D-pillar
(10) Door panel
(12) Roof (or convertible top)
(13) Roof side rail
(14) Windshield
(15) Windshield header
(16) Window frame
(17) Floor pan
(18) Backlight header
(19) Front seat back
(20) Second seat back
(21) Third seat back
(22) Fourth seat back
(23) Fifth seat back
(24) Seat cushion
(25) Back panel or door surface
(26) Other interior component (specify): _____
(27) Side panel - forward of the A-pillar
(28) Side panel - rear of the A-pillar

Exterior Components
(30) Hood
(31) Outside surface of vehicle (specify): _____
(32) Other exterior object in the environment (specify): _____
(33) Unknown exterior object
(97) Catastrophic
(98) Intrusion of unlisted component(s) (specify): _____
(99) Unknown

MAGNITUDE OF INTRUSION
(1) ≥ 1 inch but < 3 inches
(2) ≥ 3 inches but < 6 inches
(3) ≥ 6 inches but < 12 inches
(4) ≥ 12 inches but < 18 inches
(5) ≥ 18 inches but < 24 inches
(6) ≥ 24 inches
(7) Catastrophic
(9) Unknown

DOMINANT CRUSH DIRECTION
(1) Vertical
(2) Longitudinal
(3) Lateral
(7) Catastrophic
(9) Unknown

STEERING COLUMN WORKING DIAGRAMS

STEERING COLUMN COLLAPSE

Steering Column Shear Module Movement

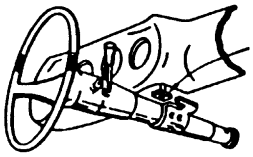

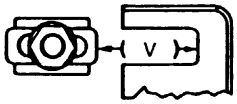

Left ____

Right ____ V = _____"

Direction and Magnitude of Steering Column Movement

Col non-specified type Column

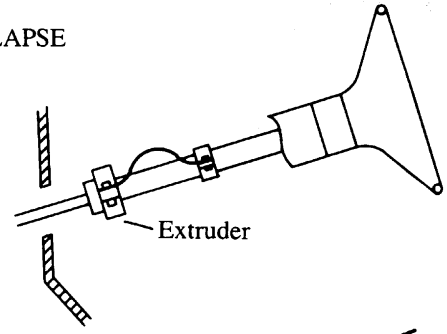

After Compression

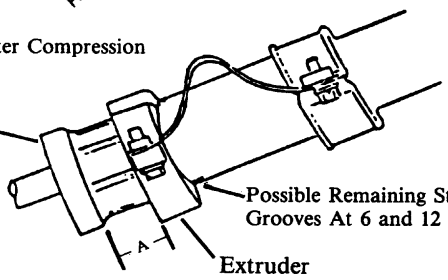

Compression = Measurement A A = _____

STEERING COLUMN MOVEMENT

Vertical Movement

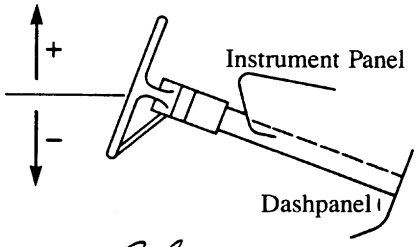

Lateral Movement

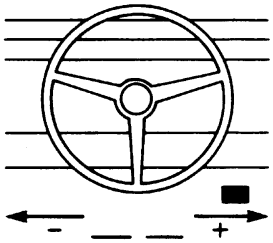

Longitudinal Movement

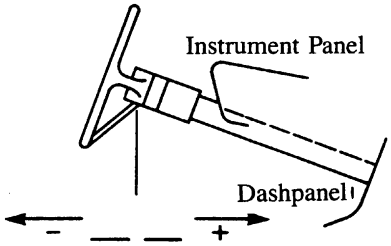

Column completely up

	COMPARISON VALUE	–	DAMAGED VALUE	=	MOVEMENT
VERTICAL 105 head.		–	14.5	=	
LATERAL Door panel (R)		–	40.5	=	
LONGITUDINAL B Pillar (Straight)		–	22.2	=	

STEERING RIM/SPOKE DEFORMATION

COMPARISON VALUE	–	DAMAGED VALUE	=	DEFORMATION
	–		=	None
	–		=	

STEERING COLUMN

87. Steering Column Type 2
(1) Fixed column
(2) Tilt column
(3) Telescoping column
(4) Tilt and telescoping column
(8) Other column type (specify): _____
(9) Unknown

If PDOF ≠ 11, 12 or 1, Then Code IV88-IV91 As 96

88. Steering Column Collapse Due to Occupant Loading 96

_____ Code actual measured movement to the nearest inch. See coding manual for measurement technique(s).
(00) No movement, compression, or collapse
(01-19) Actual measured value
(20) 20 inches or greater

slides show lower universal joint only

Estimated movement from observation
(81) Less than 1 inch
(82) ≥ 1 inch but < 2 inches
(83) ≥ 2 inches but < 4 inches
(84) ≥ 4 inches but < 6 inches
(85) ≥ 6 inches but < 8 inches
(86) Greater than or equal to 8 inches
(96) Not assessed (PDOF ≠ 11, 12, 1)
(97) Apparent movement, value undetermined or cannot be measured or estimated
(98) Nonspecified type column
(99) Unknown

NASS CODING CHANGE 1st Review: 2B 2nd Review: _____

Direction And Magnitude of Steering Column Movement 96

89. Vertical Movement ± 96

90. Lateral Movement ± 96

91. Longitudinal Movement ± 96

Code the actual measured movement to the nearest inch. See Coding Manual for measurement technique(s)
(00) No steering column movement
(±01 – ±49) Actual measured value
(±50) 50 inches or greater

Estimated movement from observation
(±81) ≥ 1 inch but < 3 inches
(±82) ≥ 3 inches but < 6 inches
(±83) ≥ 6 inches but < 12 inches
(±84) ≥ 12 inches
(__96) Not assessed (PDOF ≠ 11, 12, 1)
(__97) Apparent movement > 1 inch but cannot be measured or estimated
(__99) Unknown

NASS CODING CHANGE 1st Review: 2B 2nd Review: _____

92. Steering Rim/Spoke Deformation 0

_____ Code actual measured deformation to the nearest inch.
(0) No steering rim deformation
(1-5) Actual measured value
(6) 6 inches or more
(8) Observed deformation cannot be measured
(9) Unknown

93. Location of Steering Rim/Spoke Deformation 00

(00) No steering rim deformation

Quarter Sections
(01) Section A
(02) Section B
(03) Section C
(04) Section D

Half Sections
(05) Upper half of rim/spoke
(06) Lower half of rim/spoke
(07) Left half of rim/spoke
(08) Right half of rim/spoke

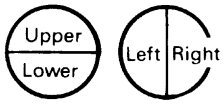

(09) Complete steering wheel collapse
(10) Undetermined location
(99) Unknown

INSTRUMENT PANEL

94. Odometer Reading 012,000

11554 miles—Code mileage to the nearest 1,000 miles
(000) No odometer
(001) Less than 1,500 miles
(300) 299,500 miles or more
(999) Unknown

Source: [redacted]

95. Instrument Panel Damage from Occupant Contact? 1
(0) No
(1) Yes
(9) Unknown

96. Knee Bolsters Deformed from Occupant Contact? 8
(0) No
(1) Yes
(8) Not present
(9) Unknown

97. Did Glove Compartment Door Open During Collision(s)? 0
(0) No
(1) Yes
(8) Not present
(9) Unknown

VEHICLE INTERIOR SKETCHES

Note area of ejection/entrapment

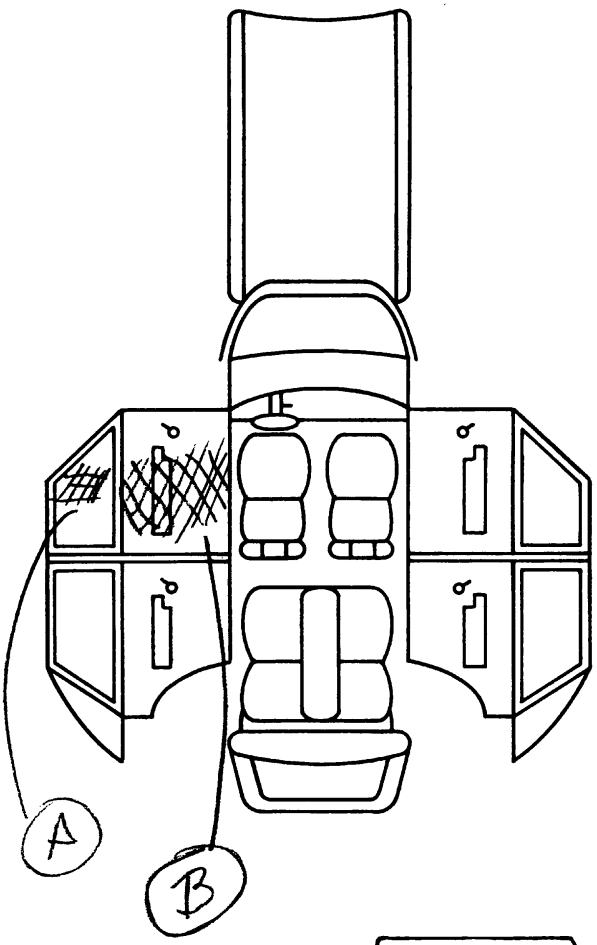

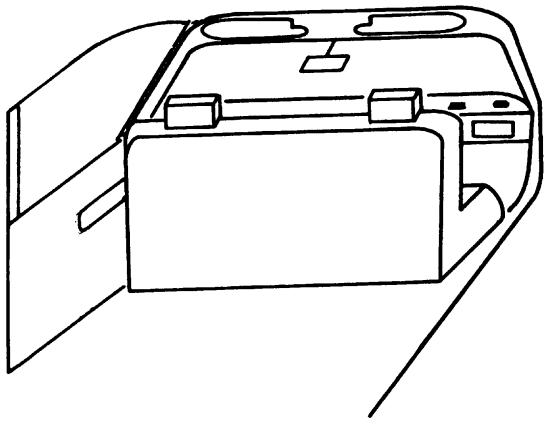

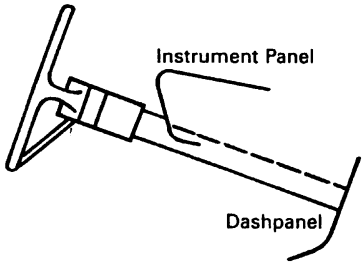

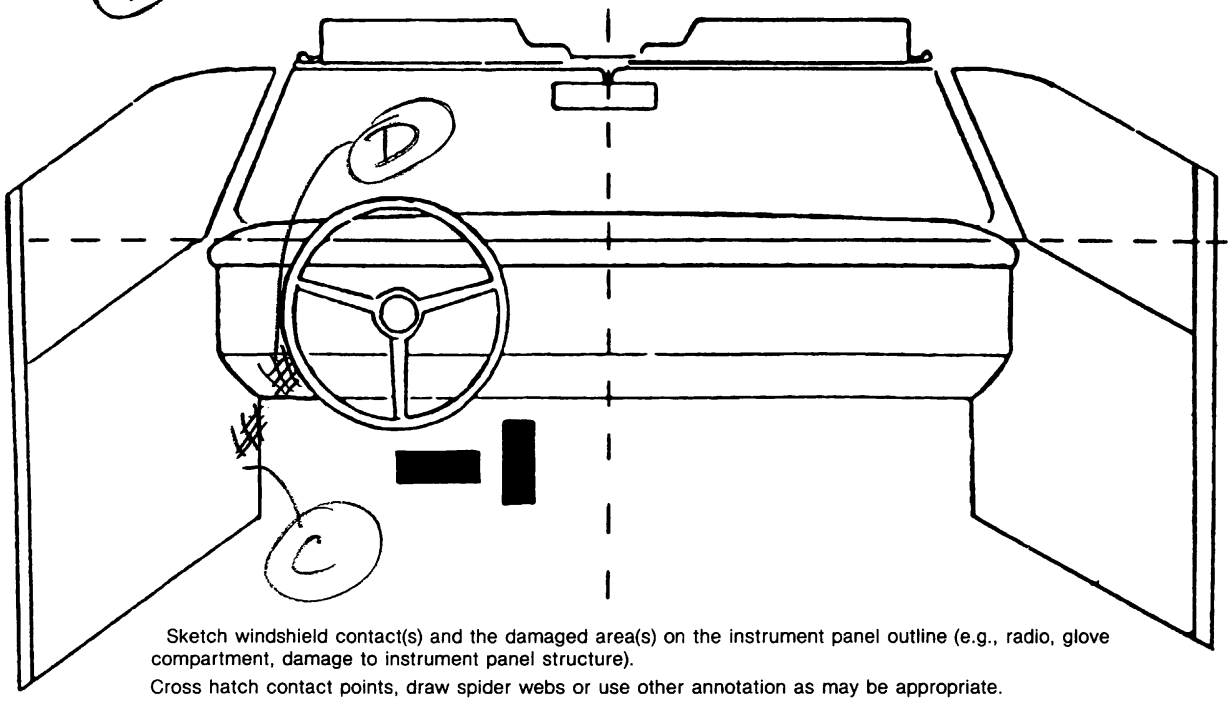

Sketch windshield contact(s) and the damaged area(s) on the instrument panel outline (e.g., radio, glove compartment, damage to instrument panel structure).

Cross hatch contact points, draw spider webs or use other annotation as may be appropriate.

Annotate the contacted area with a letter (begin with A) and list on the Points of Occupant Contact page.

POINTS OF OCCUPANT CONTACT

Contact	Interior Component Contacted	Occupant No. If Known	Body Region If Known	Supporting Physical Evidence	Confidence Level of Contact Point
A	25	01	Head/Face	oil smudges	1
B	20/21	01	L. Side torso	dented from loading	1
C	49	01	L. foot	scratched + out of place	1
D	09	01	L. Knee	scuffs	1
E					
F					
G					
H					
I					
J					
K					
L					
M					
N					

Fuse Box cover

CODES FOR INTERIOR COMPONENTS

FRONT
- (01) Windshield
- (02) Mirror
- (03) Sunvisor
- (04) Steering wheel rim
- (05) Steering wheel hub/spoke
- (06) Steering wheel (combination of codes 04 and 05)
- (07) Steering column, transmission selector lever, other attachment
- (08) Add on equipment (e.g., CB, tape deck, air conditioner)
- (09) Left instrument panel and below
- (10) Center instrument panel and below
- (11) Right instrument panel and below
- (12) Glove compartment door
- (13) Knee bolster
- (14) Windshield including one or more of the following: front header, A-pillar, instrument panel, mirror,or steering assembly (driver side only)
- (15) Windshield including one or more of the following: front header, A-pillar, instrument panel, or mirror (passenger side only)
- (16) Other front object (specify): _____

LEFT SIDE
- (20) Left side interior surface, excluding hardware or armrests
- (21) Left side hardware or armrest
- (22) Left A pillar
- (23) Left B pillar
- (24) Other left pillar (specify): _____
- (25) Left side window glass or frame
- (26) Left side window glass including one or more of the following: frame, window sill, A-pillar, B-pillar, or roof side rail
- (27) Other left side object (specify): _____

RIGHT SIDE
- (30) Right side interior surface, excluding hardware or armrests
- (31) Right side hardware or armrest
- (32) Right A pillar
- (33) Right B pillar
- (34) Other right pillar (specify): _____
- (35) Right side window glass or frame
- (36) Right side window glass including one or more of the following: frame, window sill, A-pillar, B-pillar, or roof side rail
- (37) Other right side object (specify): _____

INTERIOR
- (40) Seat, back support
- (41) Belt restraint webbing/buckle
- (42) Belt restraint B-pillar attachment point
- (43) Other restraint system component (specify): _____
- (44) Head restraint system
- (45) Air bag
- (46) Other occupants (specify): _____
- (47) Interior loose objects
- (48) Child safety seat (specify): _____
- (49) Other interior object (specify): Fuse box cover

ROOF
- (50) Front header
- (51) Rear header
- (52) Roof left side rail
- (53) Roof right side rail
- (54) Roof or convertible top

FLOOR
- (56) Floor including toe pan
- (57) Floor or console mounted transmission lever, including console
- (58) Parking brake handle
- (59) Foot controls including parking brake

REAR
- (60) Backlight (rear window)
- (61) Backlight storage rack, door, etc.
- (62) Other rear object (specify): _____

CONFIDENCE LEVEL OF CONTACT POINT
- (1) Certain
- (2) Probable
- (3) Possible
- (4) Unknown

AUTOMATIC RESTRAINTS

NOTES: Encode the data for each applicable front seat position. The attributes for the variables may be found below. Restraint systems should be assessed during the vehicle inspection then coded on the Occupant Assessment Form.

		Left	Center	Right
FIRST	Availability	4	Ø	4
	Function	1	Ø	1
	Failure	1	Ø	1

Automatic (Passive) Restraint System Availability

(0) Not equipped/not available
(1) Airbag
(2) Airbag disconnected (specify):

_____

(3) Airbag not reinstalled
(4) 2 point automatic belts
(5) 3 point automatic belts
(6) Automatic belts destroyed or rendered inoperative
(9) Unknown

Automatic (Passive) Restraint Function

(0) Not equipped/not available

Automatic Belt
(1) Automatic belt in use
(2) Automatic belt not in use
(3) Automatic belt use unknown

Air Bag
(4) Airbag deployed during accident
(5) Airbag deployed inadvertently just prior to accident
(6) Deployed, accident sequence undetermined
(7) Nondeployed
(8) Unknown if deployed
(9) Unknown

Did Automatic (Passive) Restraint Fail

(0) Not equipped/not available
(1) No
(2) Yes (specify): _____
(9) Unknown

MANUAL RESTRAINTS

NOTES: Encode the applicable data **for each seat position** in the vehicle. The attributes for the variables may be found below. Restraint systems should be assessed during the vehicle inspection then coded on the Occupant Assessment Form.

If a child safety seat is present, encode the data on the back of this page.

If the vehicle has automatic restraints available, encode the appropriate data on the back of the previous page.

		Left	Center	Right
FIRST	Availability	3	Ø	3
	Use	Ø3	ØØ	ØØ
	Failure Modes	1	Ø	Ø
SECOND	Availability	4	3	4
	Use	Ø4	Ø3	Ø4
	Failure Modes	1	1	1
THIRD	Availability			
	Use			
	Failure Modes			
OTHER	Availability			
	Use			
	Failure Modes			

Manual (Active) Belt System Availability

(0) Not available
(1) Belt removed/destroyed
(2) Shoulder belt
(3) Lap belt
(4) Lap and shoulder belt
(5) Belt available — type unknown
(8) Other belt (specify):

_____

(9) Unknown

Manual (Active) Belt System Use

(00) None used, not available, or belt removed/destroyed
(01) Inoperative (specify):

_____

(02) Shoulder belt
(03) Lap belt
(04) Lap and shoulder belt
(05) Belt used — type unknown

_____

(08) Other belt used (specify):

_____

(12) Shoulder belt used with child safety seat
(13) Lap belt used with child safety seat
(14) Lap and shoulder belt used with child safety seat
(15) Belt used with child safety seat — type unknown
(18) Other belt used with child safety seat (specify):

_____

(99) Unknown if belt used

Manual (Active) Belt Failure Modes During Accident

(0) No manual belt used or not available
(1) No manual belt failure(s)
(2) Torn webbing (stretched webbing not included)
(3) Broken buckle or latchplate
(4) Upper anchorage separated
(5) Other anchorage separated (specify):

_____

(6) Broken retractor
(7) Combination of above (specify):

_____

(8) Other manual belt failure (specify):

_____

(9) Unknown

CHILD SAFETY SEAT FIELD ASSESSMENT

When a child safety seat is present enter the occupant's number in the first row and complete the column below the occupant's number using the codes listed below. Complete a column for each child safety seat present.

Occupant Number						
1. Type of Child Safety Seat						
2. Child Safety Seat Orientation						
3. Child Safety Seat Harness Usage						
4. Child Safety Seat Shield Usage						
5. Child Safety Seat Tether Usage						
6. Child Safety Seat Make/Model	Specify Below for Each Child Safety Seat					

1. Type of Child Safety Seat

   (0) No child safety seat
   (1) Infant seat
   (2) Toddler seat
   (3) Convertible seat
   (4) Booster seat
   (7) Other type child safety seat (specify):

   _____

   (8) Unknown child safety seat type
   (9) Unknown if child safety seat used

2. Child Safety Seat Orientation

   (00) No child safety seat

   Designed for Rear Facing for This Age/Weight
   (01) Rear facing
   (02) Forward facing
   (03) Other orientation (specify):

   _____

   (04) Unknown orientation

   Designed for Forward Facing for This Age/Weight
   (11) Rear facing
   (12) Forward facing
   (18) Other orientation (specify):

   _____

   (19) Unknown orientation

   Unknown Design or Orientation for This Age/Weight, or Unknown Age/Weight
   (21) Rear facing
   (22) Forward facing
   (28) Other orientation (specify):

   _____

   (29) Unknown orientation

   (99) Unknown if child safety seat used

3. Child Safety Seat Harness Usage

4. Child Safety Seat Shield Usage

5. Child Safety Seat Tether Usage

   Note: Options Below Are Used for Variables 3-5.

   (00) No child safety seat

   Not Designed with Harness/Shield/Tether
   (01) After market harness/shield/tether added, not used
   (02) After market harness/shield/tether used
   (03) Child safety seat used, but no after market harness/shield/tether added
   (09) Unknown if harness/shield/tether added or used

   Designed with Harness/Shield/Tether
   (11) Harness/shield/tether not used
   (12) Harness/shield/tether used
   (19) Unknown if harness/shield/tether used

   Unknown if Designed with Harness/Shield/Tether
   (21) Harness/shield/tether not used
   (22) Harness/shield/tether used
   (29) Unknown if harness/shield/tether used

   (99) Unknown if child safety seat used

6. Child Safety Seat Make/Model
   (Specify make/model and occupant number)

   _____

   _____

   _____

   _____

HEAD RESTRAINTS/SEAT EVALUATION

NOTES: Encode the applicable data for **each seat position** in the vehicle. The attributes for these variables may be found at the bottom of the page. Head restraint type/damage and seat type/performance should be assessed during the vehicle inspection then coded on the Occupant Assessment Form.

		Left	Center	Right
FIRST	Head Restraint Type/Damage	3	Ø	3
	Seat Type	Ø2	ØØ	Ø2
	Seat Performance	1	Ø	1
SECOND	Head Restraint Type/Damage	Ø	Ø	Ø
	Seat Type	Ø3	Ø3	Ø3
	Seat Performance	1	1	1
THIRD	Head Restraint Type/Damage			
	Seat Type			
	Seat Performance			
OTHER	Head Restraint Type/Damage			
	Seat Type			
	Seat Performance			

Head Restraint Type/Damage by Occupant at This Occupant Position

(0) No head restraints
(1) Integral — no damage
(2) Integral — damaged during accident
(3) Adjustable — no damage
(4) Adjustable — damaged during accident
(5) Add-on — no damage
(6) Add-on — damaged during accident
(8) Other (specify): _____
(9) Unknown

Seat Type (This Occupant Position)

(00) No seat
(01) Bucket
(02) Bucket with folding back
(03) Bench
(04) Bench with separate back cushions
(05) Bench with folding back(s)
(06) Split bench with separate back cushions
(07) Split bench with folding back(s)
(08) Pedestal (i.e., van type)
(09) Other seat type (specify): _____
(99) Unknown

Seat Performance (This Occupant Position)

(0) No seat
(1) No seat performance failure(s)
(2) Seat adjusters failed
(3) Seat back folding locks failed
(4) Seat tracks/anchors failed
(5) Deformed by impact of occupant
(6) Deformed by passenger compartment intrusion (specify):
_____
_____
(7) Combination of above (specify):
(8) Other (specify):
_____
(9) Unknown

DESCRIBE ANY INDICATION OF ABNORMAL OCCUPANT POSTURE (I.E. UNUSUAL OCCUPANT CONTACT PATTERN)

None

EJECTION/ENTRAPMENT DATA

Complete the following if the researcher has any indications that an occupant was either ejected from or entrapped in the vehicle. Code the appropriate data on the Occupant Assessment Form.

EJECTION No [X] Yes [ ]

Describe indications of ejection and body parts involved in partial ejection(s):

Occupant Number						
Ejection						
(Note on Vehicle Interior Sketch) Ejection Area						
Ejection Medium						
Medium Status						

Ejection
(1) Complete ejection
(2) Partial ejection
(3) Ejection, unknown degree
(9) Unknown

Ejection Area
(1) Windshield
(2) Left front
(3) Right front
(4) Left rear
(5) Right rear
(6) Rear
(7) Roof
(8) Other area (e.g., back of pickup, etc.) (specify): _____
(9) Unknown

Ejection Medium
(1) Door/hatch/tailgate
(2) Nonfixed roof structure
(3) Fixed glazing
(4) Nonfixed glazing (specify): _____
(5) Integral structure
(8) Other medium (specify): _____
(9) Unknown

Medium Status (Immediately Prior to Impact)
(1) Open
(2) Closed
(3) Integral structure
(9) Unknown

ENTRAPMENT No [X] Yes [ ]

Describe entrapment mechanism: _____

Component(s): _____

(Note in vehicle interior diagram)

PSU NUMBER 42

CASE NUMBER 080A

VEHICLE NUMBER 03

OCCUPANT NUMBER 01

OCCUPANT INJURY FORM

THE FOLLOWING DATA IS NOT INCLUDED IN THIS CASE:

[✓] ENTIRE FORM

[] PAGE NUMBER (S) _____

U.S. Department of Transportation
National Highway Traffic Safety Administration

UPDATE FORM

NATIONAL ACCIDENT SAMPLING SYSTEM
CRASHWORTHINESS DATA SYSTEM

1. Primary Sampling Unit Number 42
2. Case Number – Stratum 0804
3. Vehicle Number 03 ~~01~~
4. Occupant Number 01

[redacted]991

Driver or Occupant Name: _____

Address: _____

Other Information: _____

(Sanitize this section prior to Update submission.)

INJURY DATA CODED ON INITIAL SUBMISSION

	Source of Injury Data	O.I.C.–A.I.S. Body Region	Aspect	Lesion	System Organ	A.I.S. Severity	Injury Source	Injury Source Confidence Level	Direct/ Indirect Injury	Occupant Area Intrusion No.
1st	5.	6.	7.	8.	9.	10.	11.	12.	13.	14.
2nd	15.	16.	17.	18.	19.	20.	21.	22.	23.	24.
3rd	25.	26.	27.	28.	29.	30.	31.	32.	33.	34.
4th	35.	36.	37.	38.	39.	40.	41.	42.	43.	44.
5th	45.	46.	47.	48.	49.	50.	51.	52.	53.	54.
6th	55.	56.	57.	58.	59.	60.	61.	62.	63.	64.
7th	65.	66.	67.	68.	69.	70.	71.	72.	73.	74.
8th	75.	76.	77.	78.	79.	80.	81.	82.	83.	84.
9th	85.	86.	87.	88.	89.	90.	91.	92.	93.	94.
10th	95.	96.	97.	98.	99.	100.	101.	102.	103.	104.

NOTE: If necessary, keep copy of original Occupant Injury form and submit as part of update.

UPDATED CASE INFORMATION

	INITIAL SUBMISSION	FINAL
GV12. Alcohol Test Results for Driver	96	96
OA05. Occupant's Age	29	29
OA06. Occupant's Sex	1	1
OA07. Occupant's Height	99	99
OA08. Occupant's Weight	999	999
OA17. Manual (Active) Belt System Availability	0	0
OA18. Manual (Active) Belt System Use	00	00
OA21. Automatic (Passive) Restraint System Availability	5	5
OA22. Automatic (Passive) Restraint Function	1	1

	INITIAL SUBMISSION	FINAL
OA35. Treatment – Mortality	4	4
OA36. Type of Medical Facility (for Initial Treatment)	1	1
OA37. Hospital Stay	00	00
OA38. Working Days Lost	99	99
OA39. Time to Death	00	00
OA40. 1st Medically Reported Cause of Death	00	00
OA41. 2nd Medically Reported Cause of Death	00	00
OA42. 3rd Medically Reported Cause of Death	00	00
OA43. Number of Recorded Injuries for This Occupant	97	03

INJURY DATA

Record below the actual injuries sustained by this occupant that were identified from the unofficial and official prior to initial case submission **and from subsequently** acquired medical data. Remember not to double count an injury just because it was identified from two different sources.

	Source of Injury Data	O.I.C.—A.I.S. Body Region	Aspect	Lesion	System Organ	A.I.S. Severity	Injury Source	Injury Source Confidence Level	Direct/ Indirect Injury	Occupant Area Intrusion No.
1st	5. 3	6. F	7. S	8. L	9. I	10. 1	11. 22	12. 3	13. 1	14. 00
2nd	15. 3	16. F	17. I	18. L	19. I	20. 1	21. 04	22. 3	23. 1	24. 00
3rd	25. 3	26. F	27. I	28. L	29. D	30. 1	31. 04	32. 3	33. 1	34. 00
4th	35.	36.	37.	28.	39.	40.	41.	42.	43.	44.
5th	45.	46.	47.	48.	49.	50.	51.	52.	53.	54.
6th	55.	56.	57.	58.	59.	60.	61.	62.	63.	64.
7th	65.	66.	67.	68.	69.	70.	71.	72.	73.	74.
8th	75.	76.	77.	78.	79.	80.	81.	82.	83.	84.
9th	85.	86.	87.	88.	89.	90.	91.	92.	93.	94.
10th	95.	96.	97.	98.	99.	100.	101.	102.	103.	104.

If greater than 10 injuries, code additional on Occupant Injury Data Supplement.

OCCUPANT INJURY DATA

	Source of Injury Data	O.I.C.—A.I.S. Body Region	Aspect	Lesion	System Organ	A.I.S. Severity	Injury Source	Injury Source Confidence Level	Direct/ Indirect Injury	Occupant Area Intrusion No.
11th	—	—	—	—	—	—	— —	—	—	— —
12th	—	—	—	—	—	—	— —	—	—	— —
13th	—	—	—	—	—	—	— —	—	—	— —
14th	—	—	—	—	—	—	— —	—	—	— —
15th	—	—	—	—	—	—	— —	—	—	— —
16th	—	—	—	—	—	—	— —	—	—	— —
17th	—	—	—	—	—	—	— —	—	—	— —
18th	—	—	—	—	—	—	— —	—	—	— —
19th	—	—	—	—	—	—	— —	—	—	— —
20th	—	—	—	—	—	—	— —	—	—	— —
21st	—	—	—	—	—	—	— —	—	—	— —
22nd	—	—	—	—	—	—	— —	—	—	— —
23rd	—	—	—	—	—	—	— —	—	—	— —

OFFICIAL INJURY DATA—SOFT TISSUE INJURIES

Indicate the *Location, Lesion, Detail* (size, depth, fracture type, head injury clinical signs and neurological deficits), and *Source* of all injuries indicated by official sources (or from PAR or other unofficial sources if medical records and interviewee data are unavailable.)

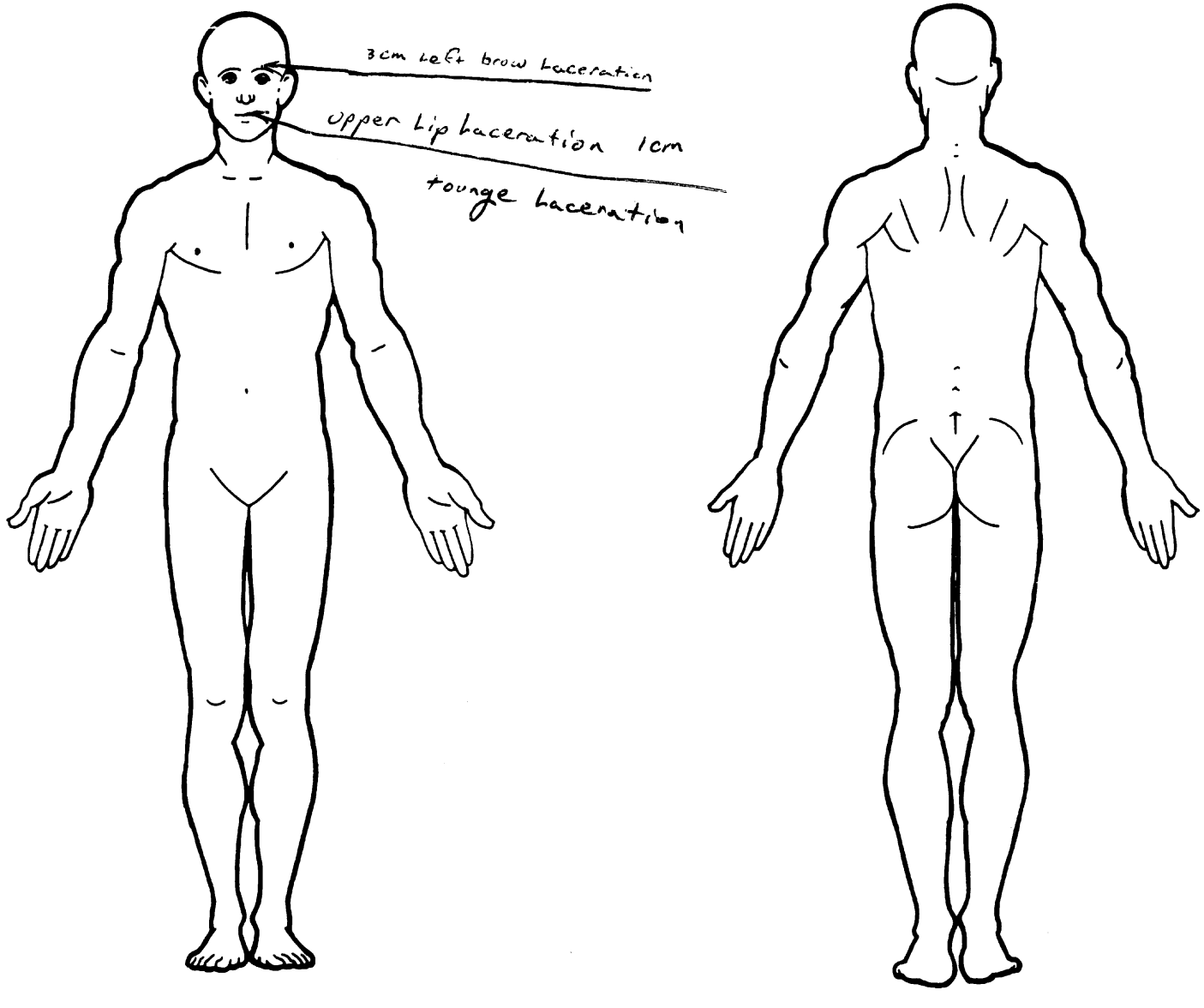

SOURCE OF INJURY DATA

OFFICIAL

(1) Autopsy records with or without hospital medical records
(2) Hospital medical records other than emergency room (eg. discharge summary)
(3) Emergency room records only (including associated X-rays or other lab reports)
(4) Private physician, walk-in or emergency clinic

UNOFFICIAL

(5) Lay coroner report
(6) E.M.S. personnel
(7) Interviewee
(8) Other source (specify): _____

(9) Police

INJURY SOURCE

FRONT

(01) Windshield
(02) Mirror
(03) Sunvisor
(04) Steering wheel rim
(05) Steering wheel hub/spoke
(06) Steering wheel (combination of codes 04 and 05)
(07) Steering column, transmission selector lever, other attachment
(08) Add-on equipment (e.g., CB, tape deck, air conditioner)
(09) Left instrument panel and below
(10) Center instrument panel and below
(11) Right instrument panel and below
(12) Glove compartment door
(13) Knee bolster
(14) Windshield including one or more of the following: front header, A-pillar, instrument panel, mirror, or steering assembly (driver side only)
(15) Windshield including one or more of the following: front header, A-pillar, instrument panel, or mirror (passenger side only)
(16) Other front object (specify): _____

LEFT SIDE

(20) Left side interior surface, excluding hardware or armrests
(21) Left side hardware or armrest
(22) Left A pillar
(23) Left B pillar
(24) Other left pillar (specify): _____

(25) Left side window glass or frame
(26) Left side window glass including one or more of the following: frame, window sill, A-pillar, B-pillar, or roof side rail
(27) Other left side object (specify): _____

RIGHT SIDE

(30) Right side interior surface, excluding hardware or armrests
(31) Right side hardware or armrest
(32) Right A pillar
(33) Right B pillar
(34) Other right pillar (specify): _____

(35) Right side window glass or frame
(36) Right side window glass including one or more of the following: frame, window sill, A-pillar, B-pillar, roof side rail
(37) Other right side object (specify): _____

INTERIOR

(40) Seat, back support
(41) Belt restraint webbing/buckle
(42) Belt restraint B-pillar attachment point
(43) Other restraint system component (specify): _____

(44) Head restraint system
(45) Air bag
(46) Other occupants (specify): _____

(47) Interior loose objects
(48) Child safety seat (specify): _____

(49) Other interior object (specify): _____

ROOF

(50) Front header
(51) Rear header
(52) Roof left side rail
(53) Roof right side rail
(54) Roof or convertible top

FLOOR

(56) Floor including toe pan
(57) Floor or console mounted transmission lever, including console
(58) Parking brake handle
(59) Foot controls including parking brake

REAR

(60) Backlight (rear window)
(61) Backlight storage rack, door, etc.
(62) Other rear object (specify): _____

EXTERIOR OF OCCUPANT'S VEHICLE

(65) Hood
(66) Outside hardware (e.g., outside mirror, antenna)
(67) Other exterior surface or tires (specify): _____

(68) Unknown exterior objects

EXTERIOR OF OTHER MOTOR VEHICLE

(70) Front bumper
(71) Hood edge
(72) Other front of vehicle (specify): _____

(73) Hood
(74) Hood ornament
(75) Windshield, roof rail, A-pillar
(76) Side surface
(77) Side mirrors
(78) Other side protrusions (specify): _____

(79) Rear surface
(80) Undercarriage
(81) Tires and wheels
(82) Other exterior of other motor vehicle (specify): _____

(83) Unknown exterior of other motor vehicle

OTHER VEHICLE OR OBJECT IN THE ENVIRONMENT

(84) Ground
(85) Other vehicle or object (specify) _____

(86) Unknown vehicle or object

NONCONTACT INJURY

(90) Fire in vehicle
(91) Flying glass
(92) Other noncontact injury source (specify) _____

(97) Injured, unknown source

INJURY SOURCE CONFIDENCE LEVEL

(1) Certain
(2) Probable
(3) Possible
(9) Unknown

DIRECT/INDIRECT INJURY

(1) Direct contact injury
(2) Indirect contact injury
(3) Noncontact injury
(7) Injured, unknown source

OCCUPANT INJURY CLASSIFICATION

O.I.C. Body Region

(M) Abdomen
(Q) Ankle–foot
(A) Arm (upper)
(B) Back–thoracolumbar spine
(C) Chest
(E) Elbow
(F) Face
(R) Forearm
(H) Head–skull
(U) Injured, unknown region
(K) Knee
(L) Leg (lower)
(Y) Lower limb(s) (whole or unknown part)
(N) Neck–cervical spine
(P) Pelvic–hip
(S) Shoulder
(T) Thigh
(X) Upper limb(s) (whole or unknown part)
(O) Whole body
(W) Wrist–hand

Aspect of Injury

(A) Anterior–front
(B) Bilateral (rib fracture only).
(C) Central
(I) Inferior–lower
(U) Injured, unknown aspect
(L) Left
(P) Posterior–back
(R) Right
(S) Superior–upper
(W) Whole region

Lesion

(A) Abrasion
(M) Amputation
(V) Avulsion
(B) Burn
(K) Concussion
(C) Contusion
(N) Crush
(G) Detachment, separation
(D) Dislocation
(F) Fracture
(Z) Fracture and dislocation
(U) Injured, unknown lesion
(L) Laceration
(O) Other
(P) Perforation, puncture
(R) Rupture
(S) Sprain
(T) Strain
(E) Total severance, transection

System/Organ

(W) All systems in region
(A) Arteries–veins
(B) Brain
(D) Digestive
(E) Ears
(O) Eye
(H) Heart
(U) Injured, unknown system
(I) Integumentary
(J) Joints
(K) Kidneys
(L) Liver
(M) Muscles
(N) Nervous system
(P) Pulmonary–lungs
(R) Respiratory
(S) Skeletal
(C) Spinal cord
(Q) Spleen
(T) Thyroid, other endocrine gland
(G) Urogenital
(V) Vertebrae

Abbreviated Injury Scale

(1) Minor injury
(2) Moderate injury
(3) Serious injury
(4) Severe injury
(5) Critical injury
(6) Maximum (untreatable)
(7) Injured, unknown severity

OFFICIAL INJURY DATA—SKELETAL INJURIES

Indicate the *Location, Lesion, Detail* (size, depth, fracture type, head injury clinical signs and neurological deficits), and *Source* of all injuries indicated by official sources (or from PAR or other unofficial sources if medical records and interviewee data are unavailable.)

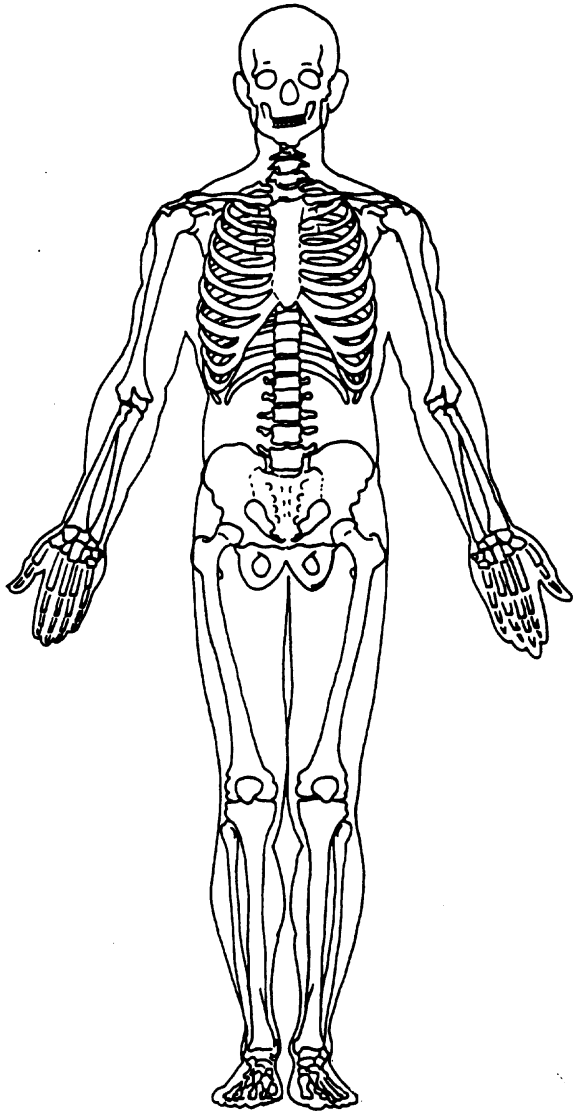

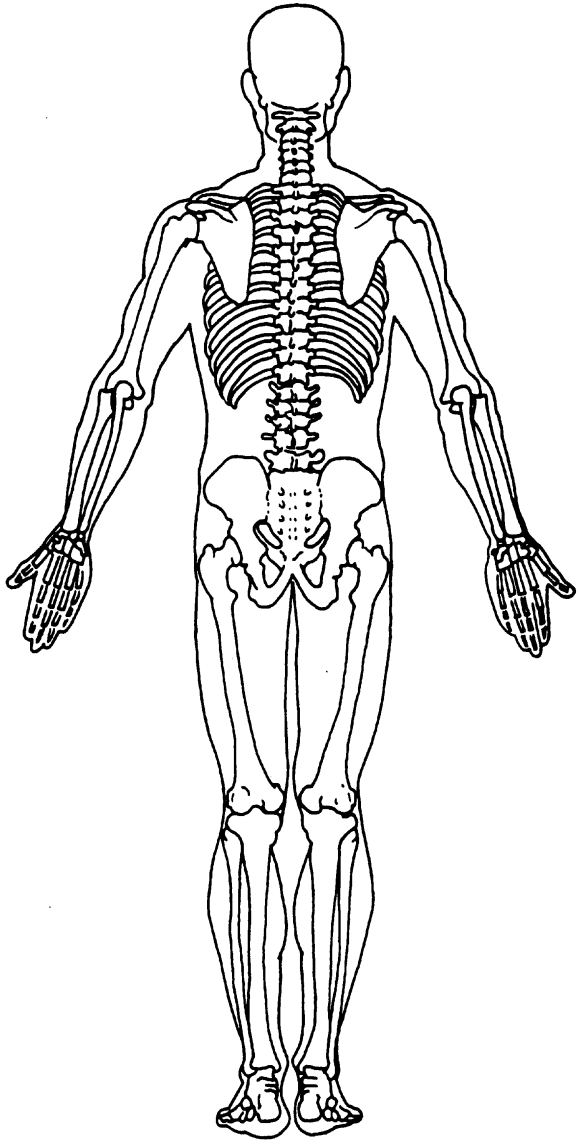

OFFICIAL INJURY DATA – INTERNAL INJURIES

Indicate the *Location, Lesion, Detail* (size, depth, fracture type, head injury clinical signs and neurological deficits), and *Source* of all injuries indicated by official sources (or from PAR or other unofficial sources if medical records and interviewee data are unavailable.)

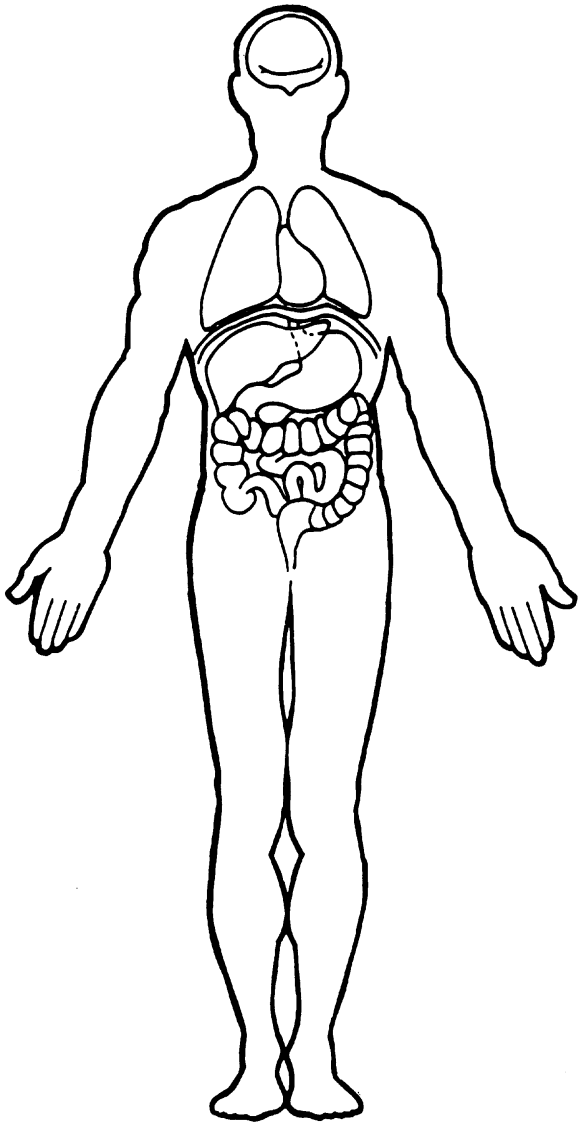

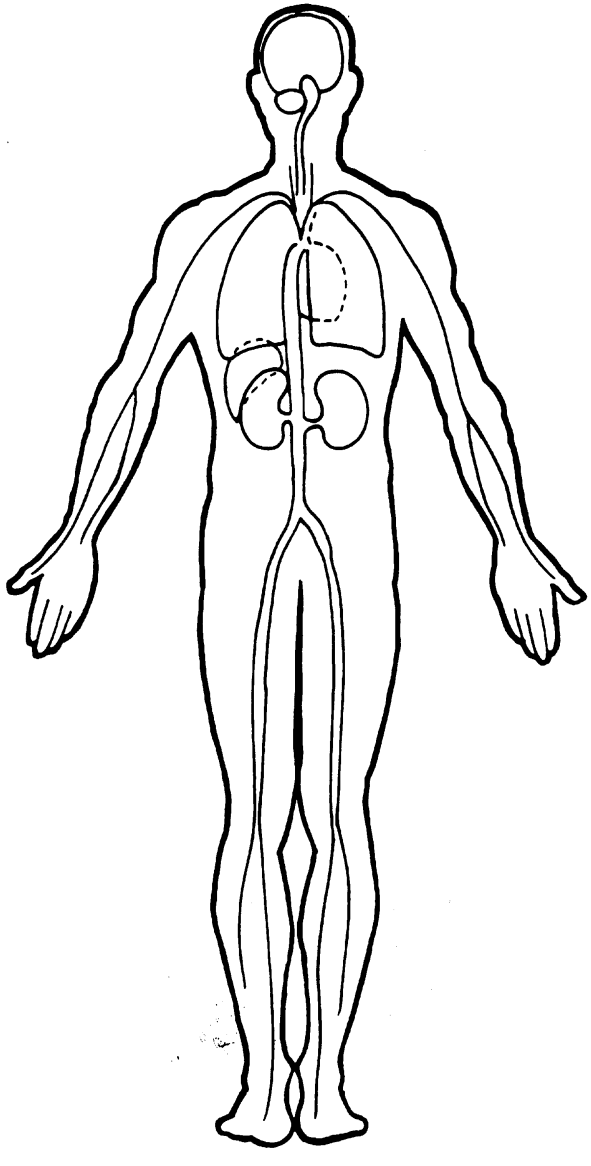

HH0191 2 If OCCUPANT POSITION OA10 equals 11 or 13 and PASSIVE
HH0192 AVAILABILITY OA21 does not equal 5, then MANUAL BELT
HH0193 AVAILABILITY OA17 should equal 3 or 4.

HH0581 2 If MANUAL BELT USE OA18 equals 00 or 01, then REPORTED RESTRAINT
HH0582 USE OA24 should equal 0, 1 or 9.

HH0731 2 If REPORTED RESTRAINT USE OA24 equals 0, then PASSIVE
HH0732 AVAILABILITY OA21 should not equal 1, 4 or 5.

```
42080A000000[redacted]903.0410000000000323320000006[redacted]90[redacted]91[redacted]90
42080A000100[redacted]903.0410000000000102F0202L
42080A000200[redacted]903.0410000000000102L0301L
42080A000300[redacted]903.0410000000000102L3100N
42080A000400[redacted]903.0410000000000202R63000
42080A000500[redacted]903.0410000000000202B51000
42080A000600[redacted]903.0410000000000301F52000
42080A01000021      3.04 000001000901801804 1G4NV54U1LM[redacted]4019740998810101026
000001001800906 99 99999 9021
42080A01000031      3.04 00000000001020 1FDEW0302030 9LYEW03
                111034_____
42080A01000041      3.04 000000000003131000000200000800100000012000000012000000
42080A01000042      3.04 000000000110123111023112423111713110213112713110613110 7
1313241321251329 9 99 99 9980601818 1
42080A01010051      3.04 000002000291999991119000000000060053066000000000000002410
099000000097_____
42080A02000021      3.04 000000000903503904999999999[redacted]1400964099891030303 1
000000000901806 99 99 99999 9021
42080A02000031      3.04 00000000001011 0LZ[redacted]406BCEN0309803272514090 0-008
                111043_____
42080A02000041      3.04 000000000989131000000966606409000000218880838122201 21
42080A02000042      3.04 000000000210863110753211053212443111343111043110633211 3
3311272311172329 6 96 96 96000017180
42080A02010051      3.04 000000000261692061119113203000060003026000000000000004100
062019900001 0_____
42080A02010161      3.03 0000000001CCRA5232102
42080A02010261      3.03 0000000001CBFS4202106
42080A02010361      3.03 0000000001HUFS2232102
42080A02010461      3.03 0000000001MRLL4232102
42080A02010561      3.03 0000000001MLLO2232102
42080A02010661      3.03 0000000001FUAI2842100
42080A02010761      3.03 0000000001MLAI1232102
42080A02010861      3.03 0000000001WLAI1843100
42080A02010961      3.03 0000000001WRAI1843100
42080A02011061      3.03 0000000001BULI1843100
42080A02020051      3.04 000001000262999992139000003000042003026000000000000003420
099000000097_____
42080A02030051      3.04 000000000272632092239163204000000002036000000000000004100
062019900001 4_____
42080A02030161      3.03 0000000001CRAI1843100
42080A02030261      3.03 0000000001MWAI2203103
42080A02030361      3.03 0000000001KLCI1843100
42080A02030461      3.03 0000000001WLCI1843100
42080A02030561      3.03 0000000001HAFS2523108
42080A02030661      3.03 0000000001CBFS4203103
42080A02030761      3.03 0000000001QLFS2979799
42080A02030861      3.03 0000000001NPDV2523208
42080A02030961      3.03 0000000001NPLC6523208
42080A02031061      3.03 0000000001HUUB3523108
42080A02031161      3.03 0000000001CCRA5203103
42080A02031261      3.03 0000000001MRLL2203103
42080A02031361      3.03 0000000001MLLO2203103
42080A02031461      3.03 0000000001YRCI1843100
```

[redacted]

42080A03000021 3.04 00000000009049032041NXAE94A2LZ[redacted]1000964099981010102 4
0000000000275699 99 999999021
42080A03000031 3.04 00000000002011 0LYAW03065299999999
010957_____
42080A03000041 3.04 0000000000011110000002000000001000000120000001200000 0
42080A03000042 3.04 0000000001114 22
296 96 96 96000012180
42080A03010051 3.04 0000000005119999911190000030391411530210000000000003420
099000000003_____
42080A03010161 3.03 0000000003FSLI1223100
42080A03010261 3.03 0000000003FILI1043100
42080A03010361 3.03 0000000003FILD1043100
42080A88888888[redacted]903.0310000000000YY0303YYY0101Y0000000000000000000000000000000000
00000000
42080A99999999[redacted]903.0310000000000000000000000010000000000000000000000000000030000
0000000000000

1990 NATIONAL ACCIDENT SAMPLING SYSTEM

ERROR SUMMARY SCREEN [redacted] 1991

CURRENT VERSION: 3.04

FORM NAME	NUMBER OF DOLLAR SIGNS	NUMBER OF LEVEL 1 ERRORS	NUMBER OF LEVEL 2 ERRORS	VERSION NUMBER CONSISTENT
Accident	0	0	0	Y
General Vehicle	0	0	1	Y
Vehicle Exterior	0	0	0	Y
Vehicle Interior	0	0	0	Y
Occupant Assessment	0	0	3	Y
Occupant Injury	0	0	0	N
Total Inter Errors		0	0	
Total Case Errors	0	0	4	

U.S. Department of Transportation
National Highway Traffic Safety Administration

SLIDE INDEX

NATIONAL ACCIDENT SAMPLING SYSTEM
CRASHWORTHINESS DATA SYSTEM

Primary Sampling Unit Number 4 2 Case Number—Stratum 0 8 0 A

Slide No.	Vehicle No.	Direction of Picture	Description of Slide Subject Matter
1-5	1	S	Trajectory, vehicle #1.
6-7	1	S	Approximate final rest point.
8	1	N	Look back along vehicle #1 path.
9-12	2	E	Trajectory, vehicle #2.
13	2	E	Approximate point of impact with vehicle #1.
14-18	2	E	Post impact trajectory, vehicle #2.
19	2	E	Point of impact #2.
20	2	W	Look back from vehicle #2 final rest point.
21	2	W	Look back along vehicle #2 path.
22	3	S	Point of impact #3, vehicle #1 and vehicle #3.
23	3	S	Post impact trajectory, vehicle #3.
24	3	S	Point of impact #2, vehicle #3 final rest point.
25-26	3	N	Look back from vehicle #3 final rest point to point
			of impact.
27-56	1		Exterior.
57-71	1		Interior.
72-105	2		Exterior.
106-132	2		Interior.
133-150	3		Exterior.
151-160	3		Interior.

HS Form 434B (Rev. 1/90)

Slide No.	Vehicle No.	Direction of Picture	Description of Slide Subject Matter

PSU 42-080A (1990) #1

PSU 42-080A (1990) #2

PSU 42-080A (1990) #3

PSU 42-080A (1990) #4

PSU 42-080A (1990) #5

PSU 42-080A (1990) #6

PSU 42-080A (1990) #7

PSU 42-080A (1990) #8

PSU 42-080A (1990) #9

PSU 42-080A (1990) #10

PSU 42-080A (1990) #11

PSU 42-080A (1990) #12

PSU 42-080A (1990) #13

PSU 42-080A (1990) #14

PSU 42-080A (1990) #15

PSU 42-080A (1990) #16

PSU 42-080A (1990) #17

PSU 42-080A (1990) #18

PSU 42-080A (1990) #19

PSU 42-080A (1990) #20

PSU 42-080A (1990) #21

PSU 42-080A (1990) #22

PSU 42-080A (1990) #23

PSU 42-080A (1990) #24

PSU 42-080A (1990) #25

PSU 42-080A (1990) #26

PSU 42-080A (1990) #27

PSU 42-080A (1990) #28
Best Available

PSU 42-080A (1990) #29

PSU 42-080A (1990) #30
Best Available

PSU 42-080A (1990) #31

PSU 42-080A (1990) #32

PSU 42-080A (1990) #33
Best Available

PSU 42-080A (1990) #34
Best Available

PSU 42-080A (1990) #35

PSU 42-080A (1990) #36

PSU 42-080A (1990) #37

PSU 42-080A (1990) #38

PSU 42-080A (1990) #39

PSU 42-080A (1990) #40

PSU 42-080A (1990) #41

PSU 42-080A (1990) #42

PSU 42-080A (1990) #43

PSU 42-080A (1990) #44

PSU 42-080A (1990) #45

PSU 42-080A (1990) #46

PSU 42-080A (1990) #47
Best Available

PSU 42-080A (1990) #48
Best Available

PSU 42-080A (1990) #49
Best Available

PSU 42-080A (1990) #50
Best Available

PSU 42-080A (1990) #51

PSU 42-080A (1990) #52
Best Available

PSU 42-080A (1990) #53
Best Available

PSU 42-080A (1990) #54
Best Available

PSU 42-080A (1990) #55

PSU 42-080A (1990) #56

PSU 42-080A (1990) #57

PSU 42-080A (1990) #58

PSU 42-080A (1990) #59

PSU 42-080A (1990) #60

PSU 42-080A (1990) #61

PSU 42-080A (1990) #62

PSU 42-080A (1990) #63

PSU 42-080A (1990) #64

PSU 42-080A (1990) #65

PSU 42-080A (1990) #66

PSU 42-080A (1990) #67

PSU 42-080A (1990) #68

PSU 42-080A (1990) #69

PSU 42-080A (1990) #70

PSU 42-080A (1990) #71

PSU 42-080A (1990) #72

PSU 42-080A (1990) #73

PSU 42-080A (1990) #74

PSU 42-080A (1990) #75

PSU 42-080A (1990) #76

PSU 42-080A (1990) #77

PSU 42-080A (1990) #78

PSU 42-080A (1990) #79

PSU 42-080A (1990) #80

PSU 42-080A (1990) #81

PSU 42-080A (1990) #82

PSU 42-080A (1990) #83

PSU 42-080A (1990) #84

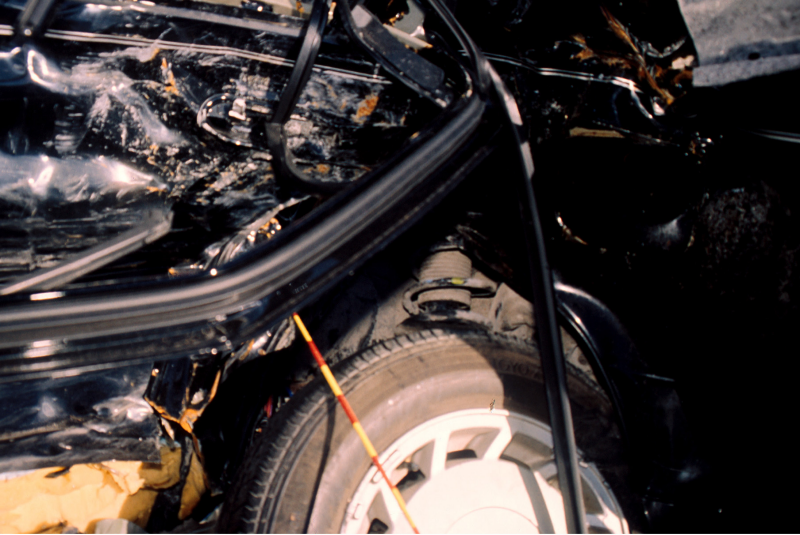

PSU 42-080A (1990) #85

PSU 42-080A (1990) #86

PSU 42-080A (1990) #87

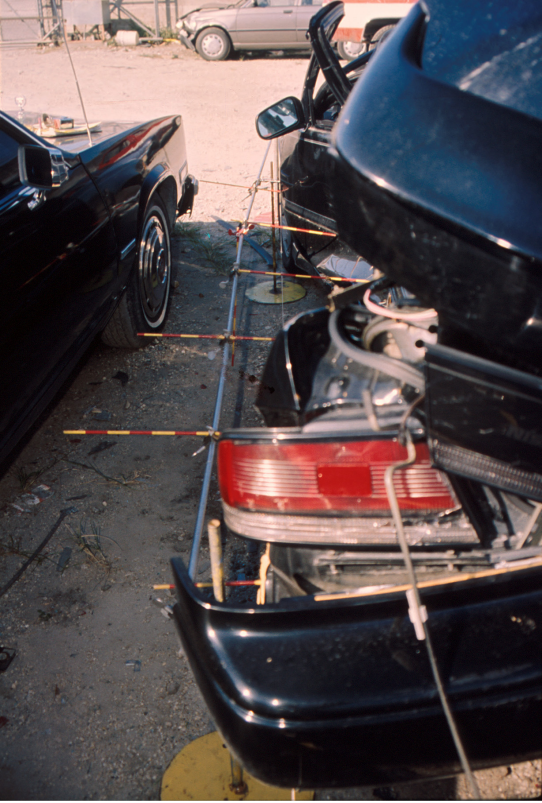

PSU 42-080A (1990) #88

PSU 42-080A (1990) #89

PSU 42-080A (1990) #90

PSU 42-080A (1990) #91

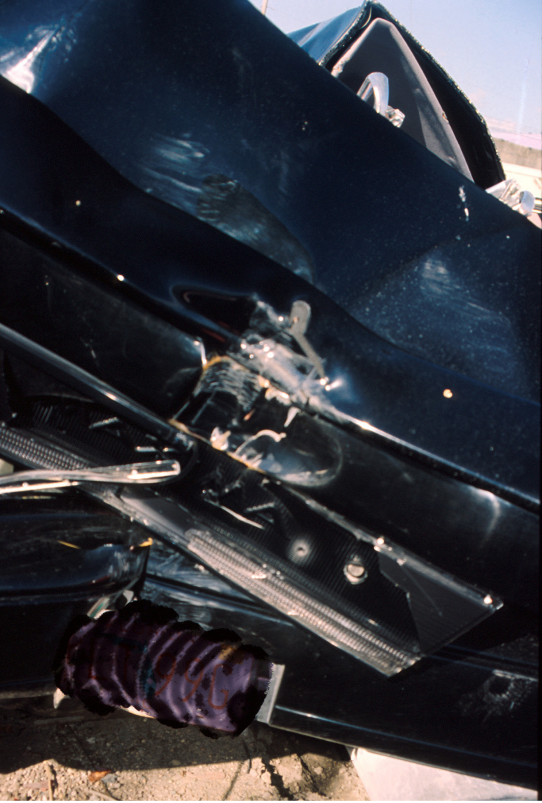

PSU 42-080A (1990) #92

PSU 42-080A (1990) #93

PSU 42-080A (1990) #94

PSU 42-080A (1990) #95

PSU 42-080A (1990) #96

PSU 42-080A (1990) #97

PSU 42-080A (1990) #98

PSU 42-080A (1990) #99

PSU 42-080A (1990) #100

PSU 42-080A (1990) #101

PSU 42-080A (1990) #102

PSU 42-080A (1990) #103

PSU 42-080A (1990) #104

PSU 42-080A (1990) #105

PSU 42-080A (1990) #106

PSU 42-080A (1990) #107
Best Available

PSU 42-080A (1990) #108

PSU 42-080A (1990) #109

PSU 42-080A (1990) #110

PSU 42-080A (1990) #111

PSU 42-080A (1990) #112

PSU 42-080A (1990) #113

PSU 42-080A (1990) #114

PSU 42-080A (1990) #115

PSU 42-080A (1990) #116

PSU 42-080A (1990) #117

PSU 42-080A (1990) #118

PSU 42-080A (1990) #119

PSU 42-080A (1990) #120

PSU 42-080A (1990) #121

PSU 42-080A (1990) #122

PSU 42-080A (1990) #123

PSU 42-080A (1990) #124

PSU 42-080A (1990) #125

PSU 42-080A (1990) #126

PSU 42-080A (1990) #127

PSU 42-080A (1990) #128

PSU 42-080A (1990) #129

PSU 42-080A (1990) #130

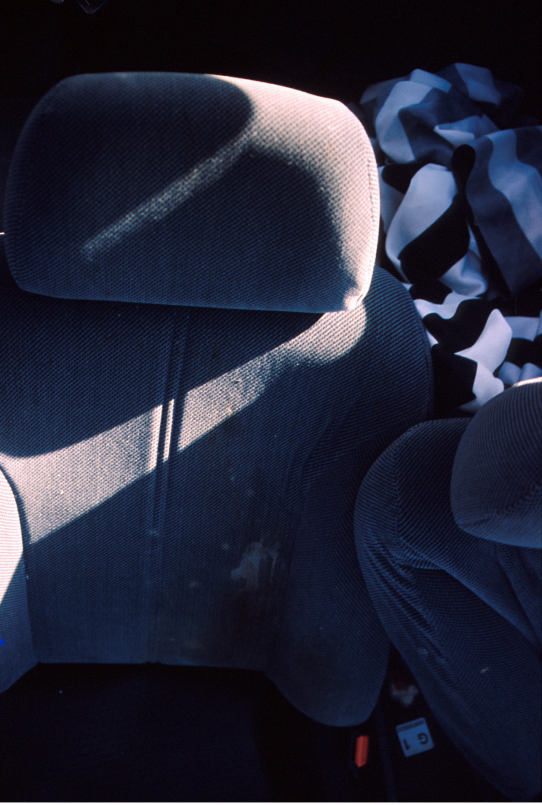

PSU 42-080A (1990) #131

PSU 42-080A (1990) #132

PSU 42-080A (1990) #133

PSU 42-080A (1990) #134

PSU 42-080A (1990) #135
Best Available

PSU 42-080A (1990) #136
Best Available

PSU 42-080A (1990) #137
Best Available

PSU 42-080A (1990) #138
Best Available

PSU 42-080A (1990) #139

PSU 42-080A (1990) #140

PSU 42-080A (1990) #141

PSU 42-080A (1990) #142

PSU 42-080A (1990) #143

PSU 42-080A (1990) #144

PSU 42-080A (1990) #145
Best Available

PSU 42-080A (1990) #146

PSU 42-080A (1990) #147
Best Available

PSU 42-080A (1990) #148
Best Available

PSU 42-080A (1990) #149
Best Available

PSU 42-080A (1990) #150

PSU 42-080A (1990) #151

PSU 42-080A (1990) #152

PSU 42-080A (1990) #153

PSU 42-080A (1990) #154

PSU 42-080A (1990) #155

PSU 42-080A (1990) #156

PSU 42-080A (1990) #157

PSU 42-080A (1990) #158

PSU 42-080A (1990) #159

PSU 42-080A (1990) #160