U.S. Department
of Transportation

**National Highway
Traffic Safety
Administration**

400 Seventh Street, S.W.
Washington, D.C. 20590

Dear Crash Data Researchers/Users:

Thank you for choosing crash data from the National Highway Traffic Safety Administration (NHTSA) for your research or other use. The information contained in this motor vehicle crash report is collected, maintained and distributed in accordance with Public Law 89-564. In accordance with this Public Law, NHTSA is required not to release any case information until completion of quality control procedures. These procedures include a review of the case material to extract all names, licenses and registration numbers, non-coded interview material, non-research related researcher comments in the margins, non-factual data, and the production number portion of the vehicle identification number (VIN).

If you requested NHTSA to query its database files in order to identify a specific crash, then that query was made using non-personal descriptors you provided for use in our search. This motor vehicle crash may have been identified from a data search and matches the general, non-personal descriptors you provided, but we cannot confirm that this is the specific crash report you requested.

If you have any questions with regard to the above procedures, please contact the Field Operations Branch, Crash Investigation Division, National Center for Statistics and Analysis at 202-366-4820. Again, please be advised that we cannot confirm that this is the case that you have specifically requested nor can we certify the information to be correct.

*** *** ***

Get it together!
SAFETY BELTS SAVE LIVES

AUTO SAFETY HOTLINE
(800) 424-9393
Wash. D.C. Area 366-0123

U.S. Department of Transportation
National Highway Traffic Safety Administration

CASE SUMMARY

NATIONAL ACCIDENT SAMPLING SYSTEM
CRASHWORTHINESS DATA SYSTEM

PSU 09 CASE NO. 504-A TYPE OF ACCIDENT CAR/PICK-UP TRUCK RIGHT ANGLE

A. DESCRIPTION OF THE ACCIDENT SEQUENCE AND ACCIDENT PECULIARITIES

(Provide a summary of the accident sequence as well as any particular event of the accident that is noteworthy. Injury mechanism and vehicle crashworthiness is the focus, not driver culpability. Do not include any personal identifiers. Use reverse side if needed.)

Vehicle #1, traveling south on a trafficway, travels off the left roadside. Vehicle #1 continues across a grass median into the opposing northbound roadway. Vehicle #2, traveling north on the same trafficway, impacts vehicle #1.

B. VEHICLE PROFILE(S)

Vehicle No.	Class of Vehicle	Year/Make/Model	Most Severe Damage		Component Failure
			Damage Plane	Severity Description	
1	Subcompact	1992/TOYOTA/Corolla	Right	Severe	Left Front Door
2	Pick-Up Truck	1992/CHEVROLET/S-10	Front	Severe	None

C. PERSON PROFILE(S)

Vehicle No.	Person Role	Seat Position	Restraint Use	Most Severe Injury			
				Body Region	Lesion	AIS	Injury Source
1	Driver	Left Front	Automatic Shoulder, Manual Lap	INJURED,	DETAILS	UNKNOWN	
2	Driver	Left Front	Lap/Shoulder	Ankle	Fracture	2	Brake Pedal

DO NOT SANITIZE THIS FORM

HS Form 434A (1/92)

ACCIDENT COLLISION DIAGRAM
PSU #09
CASE NUMBER/STRATUM: 504A
SPEED LIMIT = 55 mph
SCALE = 1" : 20'

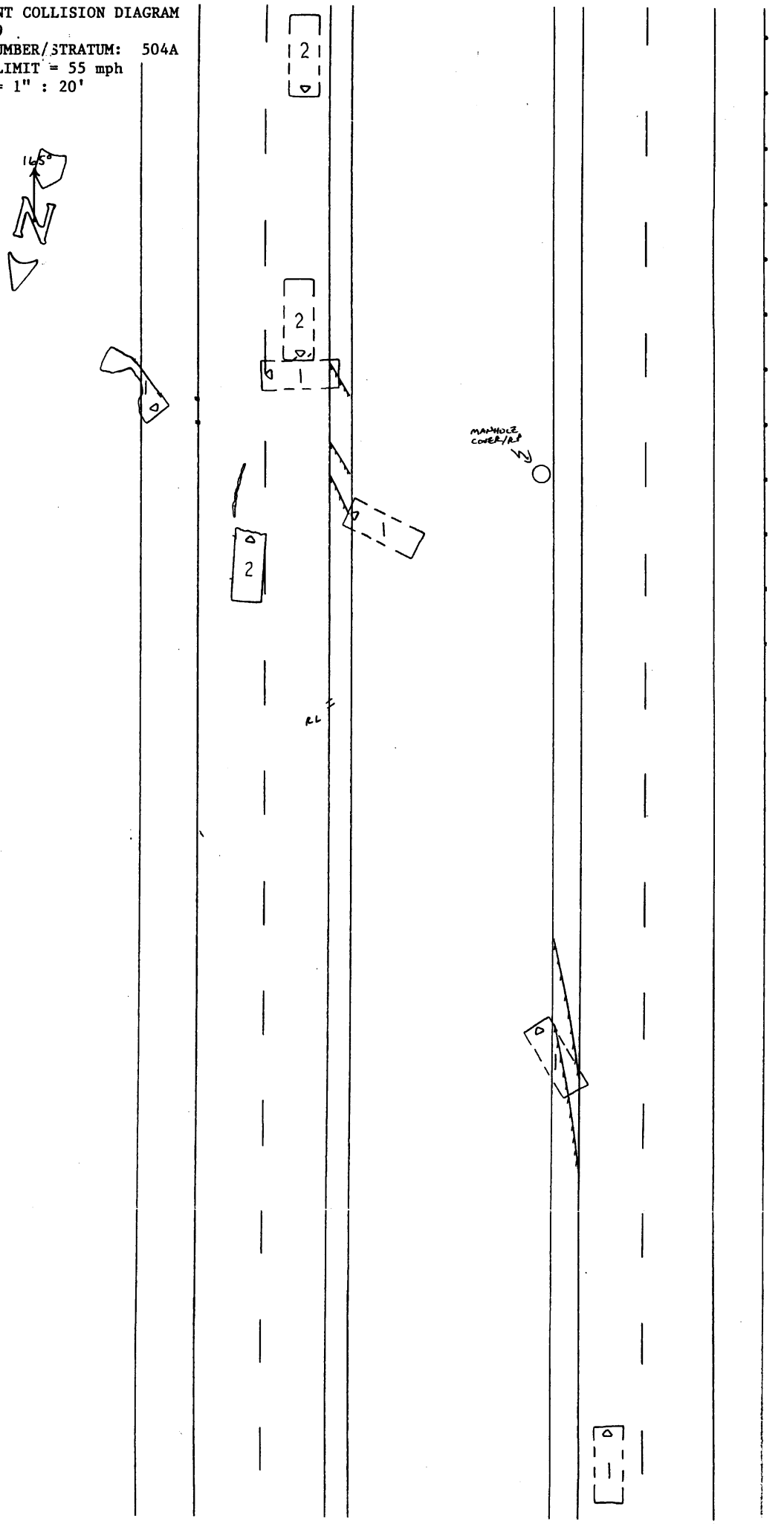

FIELD SKETCH

504 A

[redacted]/92

Asphalt (polished)

POI → FRP

Grade

$V_1 = {}^{-.7}/_{24}$

$V_2 = {}^{+1.0}/_{24}$

Speed Limit = 55

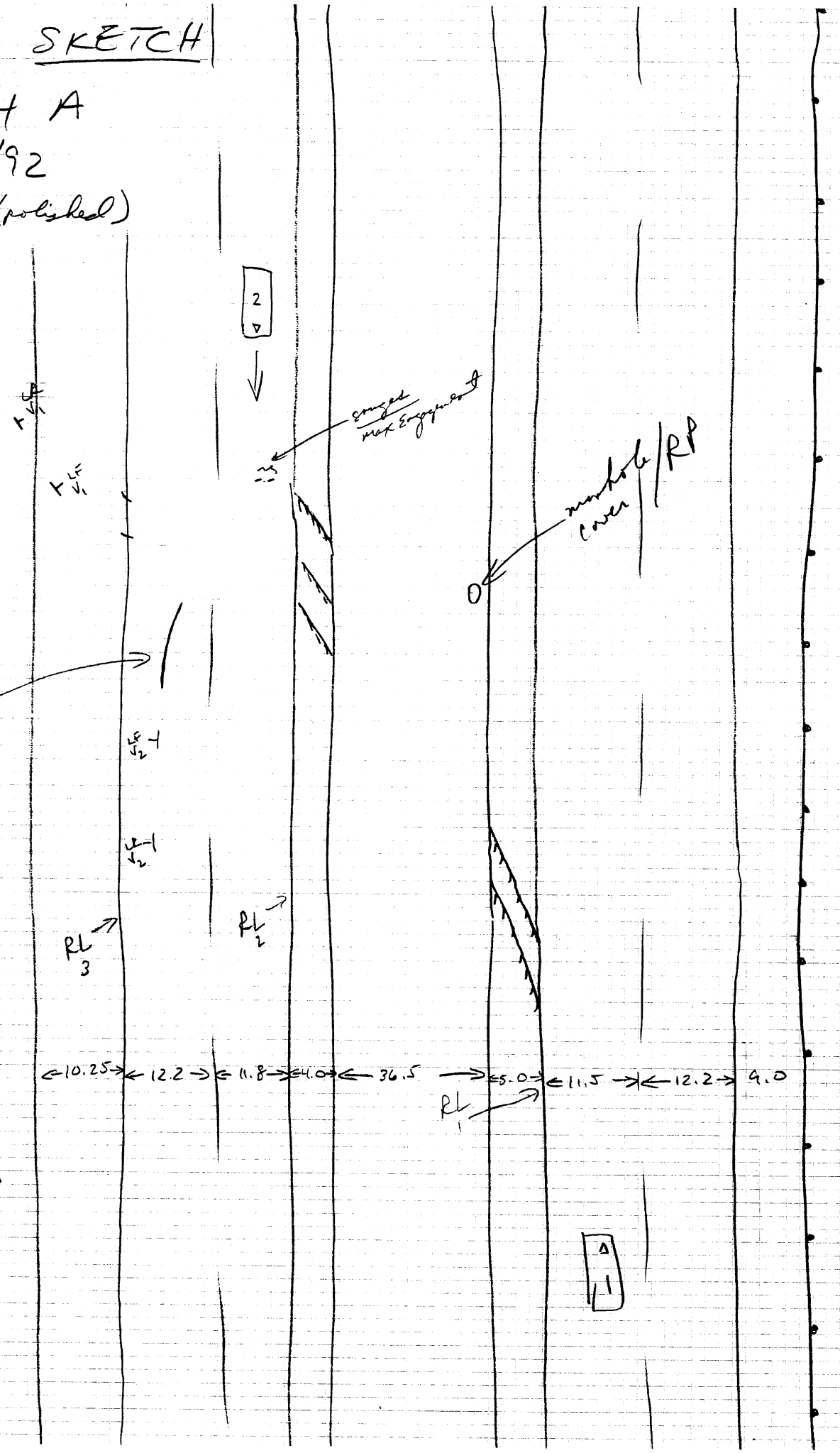

U.S. Department of Transportation
National Highway Traffic Safety Administration

ACCIDENT COLLISION MEASUREMENT TABLE

NATIONAL ACCIDENT SAMPLING SYSTEM
CRASHWORTHINESS DATA SYSTEM

Primary Sampling Unit Number 0 9 Case Number—Stratum 5 0 4 A

ACCIDENT COLLISION DIAGRAM

LEVEL I
PHYSICAL EVIDENCE ABSENT

To be accomplished when there is no physical evidence present at the scene:

- approximate vehicle orientation at impact and final rest
- applicable road/roadway delineation (e.g., curbs/edge lines, lane markings, median markings, pavement markings, etc.)
- applicable traffic controls (e.g., speed limit)
- north arrow placed on diagram
- sketch required

LEVEL II
PHYSICAL EVIDENCE PRESENT

In addition to the level I tasks noted above, the following must be accomplished when physical evidence is present:

- document reference point and reference line relative to physical features present at the scene
- scale documentation of all accident induced physical evidence
- scaled documentation of all roadside objects contacted
- roadway surface type and condition of applicable roadways
- grade measurements for all applicable roadways and at location of rollover initiation
- scaled representations of the vehicle(s) at pre-impact, impact, and final rest based upon either:
  - a) physical evidence, or
  - b) reconstructed accident dynamics

CRASH DATA

	VEH. #1	VEH. #2	VEH. #3
Heading Angle			
Surface Type			
Surface Condition			
Grade (v/h) Measurement (between impact and final rest)			
Grade (v/h) Measurement (at location of rollover initiation)			

Reference Point: Manhole cover

Reference line: #3 southbound (L) lane (L) edgeline

Item	Distance and Direction from Reference Point	Distance and Direction from Reference Line
Yaw #2 Ends	84.5 N	4.8 E
Yaw #2 midpt	100.3	1.4 E
Yaw #1 Ends	100.3	4.8 E
Yaw #2 Start	109.9	Ø
Yaw #1 Midpt	109.9	2.6 E
Yaw #1 Start	128.8	0
RP → RL (3.4' Diam)	0	7.4 E

HS Form 431A (1/92)

Item	Distance and Direction from Reference Point	Distance and Direction from Reference Line

U.S. Department of Transportation
National Highway Traffic Safety Administration

ACCIDENT COLLISION MEASUREMENT TABLE

NATIONAL ACCIDENT SAMPLING SYSTEM
CRASHWORTHINESS DATA SYSTEM

Primary Sampling Unit Number 0 9 Case Number—Stratum 5 0 4 A

ACCIDENT COLLISION DIAGRAM

LEVEL I
PHYSICAL EVIDENCE ABSENT

To be accomplished when there is no physical evidence present at the scene:

- approximate vehicle orientation at impact and final rest
- applicable road/roadway delineation (e.g., curbs/edge lines, lane markings, median markings, pavement markings, etc.)
- applicable traffic controls (e.g., speed limit)
- north arrow placed on diagram
- sketch required

LEVEL II
PHYSICAL EVIDENCE PRESENT

In addition to the level I tasks noted above, the following must be accomplished when

LEVEL II (Cont'd)
physical evidence is present:

- document reference point and reference line relative to physical features present at the scene
- scale documentation of all accident induced physical evidence
- scaled documentation of all roadside objects contacted
- roadway surface type and condition of applicable roadways
- grade measurements for all applicable roadways and at location of rollover initiation
- scaled representations of the vehicle(s) at pre-impact, impact, and final rest based upon either:
  - a) physical evidence, or
  - b) reconstructed accident dynamics

CRASH DATA

	VEH. #1	VEH. #2	VEH. #3
Heading Angle			
Surface Type			
Surface Condition			
Grade (v/h) Measurement (between impact and final rest)			
Grade (v/h) Measurement (at location of rollover initiation)			

Reference Point: _____

Reference line: /2 ~~S~~ Northbound
(L) lane (L) edge line

Item	Distance and Direction from Reference Point	Distance and Direction from Reference Line
RP/Yaw, Ends	0 ~~S~~	Ø
Yaw 2 Starts	.4 N	3.8 W
Yaw, Starts	7.25 N	3.8 W
Yaw 2 Ends	5.9 S	0
Yaw 3 Starts	14.1 S	3.8 W
Yaw 3 Ends	20.1 S	0
Gauge #1	20.8 S	6.35 E
Gauge #2	21.3 S	3.5 E

HS Form 431A (1/92)

Item	Distance and Direction from Reference Point	Distance and Direction from Reference Line

U.S. Department of Transportation
National Highway Traffic Safety Administration

ACCIDENT COLLISION MEASUREMENT TABLE

NATIONAL ACCIDENT SAMPLING SYSTEM
CRASHWORTHINESS DATA SYSTEM

Primary Sampling Unit Number 0 9 Case Number—Stratum 5 0 4 A

ACCIDENT COLLISION DIAGRAM

LEVEL I
PHYSICAL EVIDENCE ABSENT

To be accomplished when there is no physical evidence present at the scene:

- approximate vehicle orientation at impact and final rest
- applicable road/roadway delineation (e.g., curbs/edge lines, lane markings, median markings, pavement markings, etc.)
- applicable traffic controls (e.g., speed limit)
- north arrow placed on diagram
- sketch required

LEVEL II
PHYSICAL EVIDENCE PRESENT

In addition to the level I tasks noted above, the following must be accomplished when

LEVEL II (Cont'd)
physical evidence is present:

- document reference point and reference line relative to physical features present at the scene
- scale documentation of all accident induced physical evidence
- scaled documentation of all roadside objects contacted
- roadway surface type and condition of applicable roadways
- grade measurements for all applicable roadways and at location of rollover initiation
- scaled representations of the vehicle(s) at pre-impact, impact, and final rest based upon either:
  - a) physical evidence, or
  - b) reconstructed accident dynamics

CRASH DATA

	VEH. #1	VEH. #2	VEH. #3
Heading Angle			
Surface Type			
Surface Condition			
Grade (v/h) Measurement (between impact and final rest)			
Grade (v/h) Measurement (at location of rollover initiation)			

Reference Point: Move over

Reference line/3 (E) side road edge

Item	Distance and Direction from Reference Point	Distance and Direction from Reference Line
V_2 Gouge Ends	8.1 N	6.4 W
PI LF V_2	11.3 N	6.9 W
PI LR V_2	19.25 N	6.2 W
V_2 Gouge Starts	1.25 S	8.5 E
V_1 Tire Scuff #1	9.5 S	Ø
V_1 Tire Scuff #2	13.3 S	Ø
PI LF V_1	14.0 S	7.0 E
PI LR V_1	20.1 S	11.7 E
V_2 Gouge midpt	6.0 N	6.4 W

HS Form 431A (1/92)

Item	Distance and Direction from Reference Point	Distance and Direction from Reference Line

U.S. Department of Transportation
National Highway Traffic Safety Administration

ACCIDENT FORM

NATIONAL ACCIDENT SAMPLING SYSTEM
CRASHWORTHINESS DATA SYSTEM

1. Primary Sampling Unit Number 0 9
2. Case Number - Stratum 5 0 4 A

IDENTIFICATION

3. Number of General Vehicle Forms Submitted 0 2
4. Date of Accident (Month,Day,Year) [redacted] / [redacted] 9 2
5. Time of Accident 0 7 5 6

Code reported military time of accident.

NOTE: Midnight = 2400
Unknown = 9999

SPECIAL STUDIES - INDICATORS

Check (✓) each special study (SS12-SS16 below) that has been completed; code 1 for the checked special studies and 0 for the special studies not checked.

6. ___ SS12 Not Active 0
7. ___ SS13 Not Active 0
8. ✓ SS14 Fatal AOPS 1
9. ___ SS15 _____ 0
10. ___ SS16 _____ 0

NUMBER OF EVENTS

11. Number of Recorded Events in This Accident 0 1

Code the number of events which occurred in this accident.

ACCIDENT EVENTS

For each event that occurred in the accident, code the lowest numbered vehicle in the left columns and the other involved vehicle or object on the right.

Accident Event Sequence Number	Vehicle Number	Class Of Vehicle	General Area of Damage	Vehicle Number or Object Contacted	Class Of Vehicle	General Area of Damage
12. 0 1	13. 0 1	14. 0 1	15. R	16. 0 2	17. 1 5	18. F
19. 0 2	20.	21.	22.	23.	24.	25.
26. 0 3	27.	28.	29.	30.	31.	32.
33. 0 4	34.	35.	36.	37.	38.	39.
40. 0 5	41.	42.	43.	44.	45.	46.

IF GREATER THAN FIVE EVENTS, CONTINUE CODING ON THE ACCIDENT EVENT SUPPLEMENT

CODES FOR CLASS OF VEHICLE

(00) Not a motor vehicle
(01) Subcompact/mini (wheelbase < 100 inches)
(02) Compact (wheelbase = 100 — 104 inches)
(03) Intermediate (wheelbase = 105 — 109 inches)
(04) Full size (wheelbase = 110 — 114 inches)
(05) Largest (wheelbase ≥ 115 inches)
(09) Unknown passenger car size
(11) Compact utility vehicle
(12) Large utility vehicle (≤ 10,000 lbs GVWR)
(13) Passenger van (≤ 10,000 lbs GVWR)
(14) Other van (≤ 10,000 lbs GVWR)
(15) Pickup truck (≤ 10,000 lbs GVWR)
(18) Other truck (≤ 10,000 lbs GVWR)
(19) Unknown light truck type
(20) School bus
(21) Other bus
(22) Truck (> 10,000 lbs GVWR)
(23) Tractor without trailer
(24) Tractor-trailer(s)
(25) Motored cycle
(28) Other vehicle
(99) Unknown

CODES FOR GENERAL AREA OF DAMAGE (GAD)

CDS APPLICABLE AND OTHER VEHICLES

(0) Not a motor vehicle
(N) Noncollision
(F) Front
(R) Right side
(L) Left side
(B) Back
(T) Top
(U) Undercarriage
(9) Unknown

TDC APPLICABLE VEHICLES

(0) Not a motor vehicle
(N) Noncollision
(F) Front
(R) Right side
(L) Left side
(B) Back of unit with cargo area (rear of trailer or straight truck)
(D) Back (rear of tractor)
(C) Rear of cab
(V) Front of cargo area
(T) Top
(U) Undercarriage
(9) Unknown

CODES FOR VEHICLE NUMBER OR OBJECT CONTACTED

(01-30) — Vehicle Number

Noncollision
(31) Overturn — rollover
(32) Fire or explosion
(33) Jackknife
(34) Other intraunit damage (specify): _____
(35) Noncollision injury
(38) Other noncollision (specify): _____
(39) Noncollision — details unknown

Collision With Fixed Object
(41) Tree (≤ 4 inches in diameter)
(42) Tree (> 4 inches in diameter)
(43) Shrubbery or bush
(44) Embankment

(45) Breakaway pole or post (any diameter)

Nonbreakaway Pole or Post
(50) Pole or post (≤ 4 inches in diameter)
(51) Pole or post (> 4 inches but ≤ 12 inches in diameter)
(52) Pole or post (> 12 inches in diameter)
(53) Pole or post (diameter unknown)

(54) Concrete traffic barrier
(55) Impact attenuator
(56) Other traffic barrier (includes guardrail) (specify): _____
(57) Fence
(58) Wall
(59) Building
(60) Ditch or culvert
(61) Ground
(62) Fire hydrant
(63) Curb
(64) Bridge
(68) Other fixed object (specify): _____
(69) Unknown fixed object

Collision with Nonfixed Object
(71) Motor vehicle not in-transport
(72) Pedestrian
(73) Cyclist or cycle
(74) Other nonmotorist or conveyance _____
(75) Vehicle occupant
(76) Animal
(77) Train
(78) Trailer, disconnected in transport
(88) Other nonfixed object (specify): _____
(89) Unknown nonfixed object

(98) Other event (specify): _____
(99) Unknown event or object

09-504A

OCCUPANT RELATED

16. Driver Presence in Vehicle 1
    (0) Driver not present
    (1) Driver present
    (9) Unknown

17. Number of Occupants This Vehicle 0 1
    (00-96) Code actual number of occupants for this vehicle
    (97) 97 or more
    (99) Unknown

18. Number of Occupant Forms Submitted 0 1

VEHICLE WEIGHT ITEMS

19. Vehicle Curb Weight 0 2 , 3 0 0
    2253 Code weight to nearest 100 pounds.
    (010) Less than 1050 pounds
    (135) 13,500 pounds or more
    (999) Unknown

    Source: [redacted]

20. Vehicle Cargo Weight 0 , 0 0 0
    ____ Code weight to nearest 100 pounds.
    (00) Less than 50 pounds
    (97) 9,650 pounds or more
    (99) Unknown

RECONSTRUCTION DATA

21. Towed Trailing Unit 0
    (0) No towed unit
    (1) Yes—towed trailing unit
    (9) Unknown

22. Documentation of Trajectory Data for This Vehicle 1
    (0) No
    (1) Yes

23. Post Collision Condition of Tree or Pole (For Highest Delta V) 0
    (0) Not collision (for highest delta V) with tree or pole
    (1) Not damaged
    (2) Cracked/sheared
    (3) Tilted <45 degrees
    (4) Tilted ≥45 degrees
    (5) Uprooted tree
    (6) Separated pole from base
    (7) Pole replaced
    (8) Other (specify): _____
    (9) Unknown

24. Rollover 0
    (0) No rollover (no overturning)

    Rollover (primarily about the longitudinal axis)
    (1) Rollover, 1 quarter turn only
    (2) Rollover, 2 quarter turns
    (3) Rollover, 3 quarter turns
    (4) Rollover, 4 or more quarter turns (specify): _____

    (5) Rollover--end-over-end (i.e., primarily about the lateral axis)
    (9) Rollover (overturn), details unknown

OVERRIDE/UNDERRIDE (THIS VEHICLE)

25. Front Override/Underride (this Vehicle) 0

26. Rear Override/Underride (this Vehicle) 0

    (0) No override/underride, or not an end-to-end impact

    Override (see specific CDC)
    (1) 1st CDC
    (2) 2nd CDC
    (3) Other not automated CDC (specify): _____

    Underride (see specific CDC)
    (4) 1st CDC
    (5) 2nd CDC
    (6) Other not automated CDC (specify): _____

    (7) Medium/heavy truck or bus override
    (9) Unknown

HEADING ANGLE AT IMPACT FOR HIGHEST DELTA V

Values: (000)-(359) Code actual value
(997) Noncollision
(998) Impact with object
(999) Unknown

27. Heading Angle For This Vehicle 0 7 4

28. Heading Angle For Other Vehicle 3 4 5

09-504A V-01

Category	Configuration	ACCIDENT TYPES (Includes Intent)				
I. Single Driver	A. Right Roadside Departure	01 DRIVE OFF ROAD	02 CONTROL/ TRACTION LOSS	03 AVOID COLLISION WITH VEH., PED., ANIM.	04 SPECIFICS OTHER	05 SPECIFICS UNKNOWN
	B. Left Roadside Departure	06 DRIVE OFF ROAD	07 CONTROL/ TRACTION LOSS	08 AVOID COLLISION WITH VEH., PED., ANIM.	09 SPECIFICS OTHER	10 SPECIFICS UNKNOWN
	C. Forward Impact	11 PARKED VEH.	12 STA. OBJECT	13 PEDESTRIAN/ ANIMAL	14 END DEPARTURE	15 SPECIFICS OTHER / 16 SPECIFICS UNKNOWN
II. Same Trafficway Same Direction	D. Rear-End	20 STOPPED 21, 22, 23	24 SLOWER 25, 26, 27	28 DECEL. 29, 30, 31	(EACH • 32) SPECIFICS OTHER	(EACH • 33) SPECIFICS UNKNOWN
	E. Forward Impact	34 CONTROL/ TRACTION LOSS	36 CONTROL/ TRACTION LOSS	38 AVOID COLLISION WITH VEH.	40 AVOID COLLISION WITH OBJECT	(EACH • 42) SPECIFICS OTHER / (EACH • 43) SPECIFICS UNKNOWN
	F. Sideswipe Angle	44 / 45	46 / 45 / 47	(EACH • 48) SPECIFICS OTHER		(EACH • 49) SPECIFICS UNKNOWN
III. Same Trafficway Opposite Direction	G. Head-On	50 / 51 LATERAL MOVE	(EACH • 52) SPECIFICS OTHER	(EACH • 53) SPECIFICS UNKNOWN		
	H. Forward Impact	54 CONTROL/ TRACTION LOSS	56 CONTROL/ TRACTION LOSS	58 AVOID COLLISION WITH VEH.	60 AVOID COLLISION WITH OBJECT	(EACH • 62) SPECIFICS OTHER / (EACH • 63) SPECIFICS UNKNOWN
	I. Sideswipe/ Angle	64 / 65 LATERAL MOVE	(EACH • 66) SPECIFICS OTHER	(EACH • 67) SPECIFICS UNKNOWN		
IV. Change Trafficway Vehicle Turning	J. Turn Across Path	68 / 69 INITIAL OPPOSITE DIRECTIONS	71 / 70 INITIAL SAME DIRECTIONS	73 / 72	(EACH • 74) SPECIFICS OTHER	(EACH • 75) SPECIFICS UNKNOWN
	K. Turn Into Path	76 / 77 TURN INTO SAME DIRECTION	78 / 79	80 / 81 TURN INTO OPPOSITE DIRECTIONS	83 / 82	(EACH • 84) SPECIFICS OTHER / (EACH • 85) SPECIFICS UNKNOWN
V. Intersecting Paths (Vehicle Damage)	L. Straight Paths	86 / 87	88 / 89	(EACH • 90) SPECIFICS OTHER		(EACH • 91) SPECIFICS UNKNOWN
VI. Miscellaneous	M. Backing Etc.	92 BACKING VEH. / 93 OTHER VEH. OR OBJECT		98 Other Accident Type 99 Unknown Accident Type 00 No Impact		

OTHER DATA

56. Driver's Zip Code [redacted]

(00000) Driver not present
(00001) Driver not a resident of U.S. or territories
20607 Code actual 5-digit zip code
(99999) Unknown

57. Driver's Race/Ethnic Origin 9
(0) Driver not present
(1) White (non-Hispanic)
(2) Black (non-Hispanic)
(3) White (Hispanic)
(4) Black (Hispanic)
(5) American Indian, Eskimo or Aleut
(6) Asian or Pacific Islander
(8) Other (specify): _____
(9) Unknown

58. Vehicle Special Use (This Trip) 0
(0) No special use
(1) Taxi
(2) Vehicle used as school bus
(3) Vehicle used as other bus
(4) Military
(5) Police
(6) Ambulance
(7) Hearse
(8) Fire truck or car
(9) Unknown

ROLLOVER DATA

If GV07 (Body Type) ≠ 1-49, leave GV59-GV63 blank.
If GV24 (Rollover) = 0, then GV59-GV63 must equal 0.
If GV24 = 9, then GV59-GV63 must equal 9.

59. Rollover Initiation Type 0
(0) No rollover
(1) Trip-over
(2) Flip-over
(3) Turn-over
(4) Climb-over
(5) Fall-over
(6) Bounce-over
(7) Collision with another vehicle
(8) Other rollover initiation type specify): _____
(9) Unknown rollover initiation type

60. Location of Rollover Initiation 0
(0) No rollover
(1) On roadway
(2) On shoulder—paved
(3) On shoulder—unpaved
(4) On roadside or divided trafficway median
(9) Unknown

61. Rollover Initiation Object Contacted 0 0

62. Location on Vehicle Where Initial Principal Tripping Force Is Applied 0
(0) No rollover
(1) Wheels/tires
(2) Side plane
(3) End plane
(4) Undercarriage
(5) Other location on vehicle (specify): _____
(8) Non-contact rollover forces (specify): _____
(9) Unknown

63. Direction of Initial Roll 0
(0) No rollover
(1) Roll right - primarily about the longitudinal axis
(2) Roll left - primarily about the longitudinal axis
(5) End-over-end (i.e., primarily about the lateral axis)
(9) Unknown roll direction

PRECRASH DATA

64. Pre-Event Movement (Prior to Recognition of Critical Event) 0 1
(01) Going straight
(02) Slowing or stopping in traffic lane
(03) Starting in traffic lane
(04) Stopped in traffic lane
(05) Passing or overtaking another vehicle
(06) Disabled or parked in travel lane
(07) Leaving a parking position
(08) Entering a parking position
(09) Turning right
(10) Turning left
(11) Making a U-turn
(12) Backing up (other than for parking position)
(13) Negotiating a curve
(14) Changing lanes
(15) Merging
(16) Successful avoidance maneuver to a previous critical event
(97) Other (specify): _____
(98) No driver present
(99) Unknown

09-504A V-01

CODES FOR ROLLOVER INITIATION OBJECT CONTACTED

(00) No rollover
(01-30) — Vehicle Number

Noncollision
(31) Turn-over — fall-over
(33) Jackknife

Collision With Fixed Object
(41) Tree (≤ 4 inches in diameter)
(42) Tree (> 4 inches in diameter)
(43) Shrubbery or bush
(44) Embankment

(45) Breakaway pole or post (any diameter)

Nonbreakaway Pole or Post
(50) Pole or post (≤ 4 inches in diameter)
(51) Pole or post (> 4 inches but ≤ 12 inches in diameter)
(52) Pole or post (> 12 inches in diameter)
(53) Pole or post (diameter unknown)

(54) Concrete traffic barrier
(55) Impact attenuator
(56) Other traffic barrier (includes guardrail) (specify):_____

(57) Fence
(58) Wall
(59) Building
(60) Ditch or culvert
(61) Ground
(62) Fire hydrant
(63) Curb
(64) Bridge
(68) Other fixed object (specify):
_____
(69) Unknown fixed object

Collision with Nonfixed Object
(71) Motor vehicle not in-transport
(76) Animal
(77) Train
(78) Trailer, disconnected in transport
(88) Other nonfixed object (specify):
_____
(89) Unknown nonfixed object

(98) Other event (specify):
_____
(99) Unknown event or object

U.S. Department of Transportation
National Highway Traffic Safety Administration

EXTERIOR VEHICLE FORM

NATIONAL ACCIDENT SAMPLING SYSTEM
CRASHWORTHINESS DATA SYSTEM

1. Primary Sampling Unit Number: 0 9
2. Case Number - Stratum: 5 0 4 A
3. Vehicle Number: 0 1

VEHICLE IDENTIFICATION

VIN 2 T 1 A E 9 7 A 4 N C [redacted] Model Year 9 2

Vehicle Make (specify): TOYOTA Vehicle Model (specify): COROLLA

LOCATOR

Locate the end of the damage with respect to the vehicle longitudinal center line or bumper corner for end impacts or an undamaged axle for side impacts.

Specific Impact No.	Location of Direct Damage	Location of Field L
1	(R) STARTS 4.8" (B) OF (E) AXLE, GOES	(R) STARTS 3.1" FORW OF (E) AXLE,
	(B) 90.1"	GOES (B) 98.8"

CRUSH PROFILE

NOTES: Identify the plane at which the C-measurements are taken (e.g., at bumper, above bumper, at sill, above sill, etc.) and label adjustments (e.g., free space).

Measure and document on the vehicle diagram the location of maximum crush.

Measure C1 to C6 from driver to passenger side in front or rear impacts and rear to front in side impacts.

Free space value is defined as the distance between the baseline and the original body contour taken at the individual C locations. This may include the following: bumper lead, bumper taper, side protrusion, side taper, etc. Record the value for each C-measurement and maximum crush.

Use as many lines/columns as necessary to describe each damage profile.

Specific Impact Number	Plane of Impact C-Measurements	Direct Damage Width (CDC)	Direct Damage Max Crush	Field L	C_1	C_2	C_3	C_4	C_5	C_6	±D
1a	MIDDOOR	90.1	69.4	98.8	13.1	66.5	68.3	60.7	50.5	.6	-2.0
	-FS	—	.8	—	0	.8	.8	.8	.3	.2	—
	-STAND ADJ	—	3.0	—	3.0	3.0	3.0	3.0	3.0	3.0	—
	RESULT	90.1	65.6	98.8	10.1	62.7	64.5	56.9	47.2	Ø	-2.0
1b	SILL LEVEL	90.1	—	98.8	N/A	32.0	34.1	37.2	37.5	N/A	-2.0
	-FS	—	—	—	—	3.5	3.5	3.5	3.5	—	—
	-STAND ADJ	—	—	—	—	3.0	3.0	3.0	3.0	—	—
	RESULT	90.1	—	98.8	—	25.5	27.6	30.7	31.0	—	-2.0
1	AVERAGE	90.1	65.6	98.8	10.1	44.1	46.05	43.8	39.1	Ø	-2.0

HS Form 435A (Rev. 1/92)

VEHICLE DAMAGE SKETCH

TIRE—WHEEL DAMAGE

a. Rotation physically restricted		b. Tire deflated	
RF	2	RF	2
LF	2	LF	2
RR	1	RR	2
LR	2	LR	2

(1) Yes (2) No (8) NA (9) Unk.

TYPE OF TRANSMISSION

☐ Manual ☒ Automatic

ORIGINAL SPECIFICATIONS

Wheelbase	95.7
Overall Length	170.3
Maximum Width	65.2
Curb Weight	2253
Average Track	55.8
Front Overhang	36.4
Rear Overhang	38.2
Engine Size: cyl./ displ.	4/1.6 ℓ
Undeformed End Width	N/A

WHEEL STEER ANGLES

(For locked front wheels or displaced rear axles only)

RF ± — °
LF ± — °
RR ± 35 °
LR ± — °

Within ±5 degrees

DRIVE WHEELS

☒ FWD ☐ RWD ☐ 4WD

Approximate Cargo Weight Ø

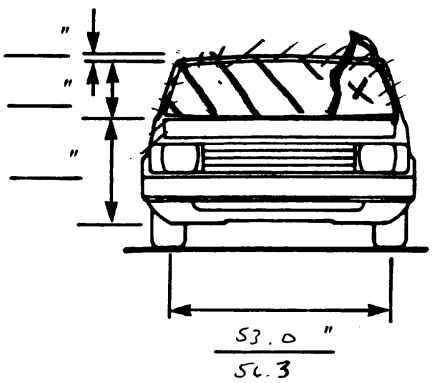

Original Bumper height 15.3

15.0

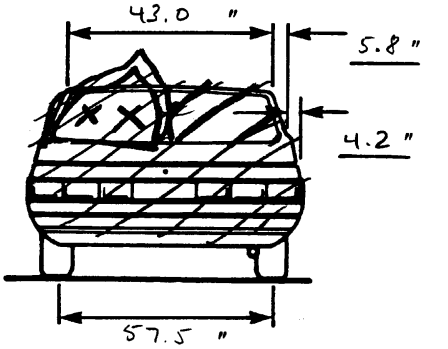

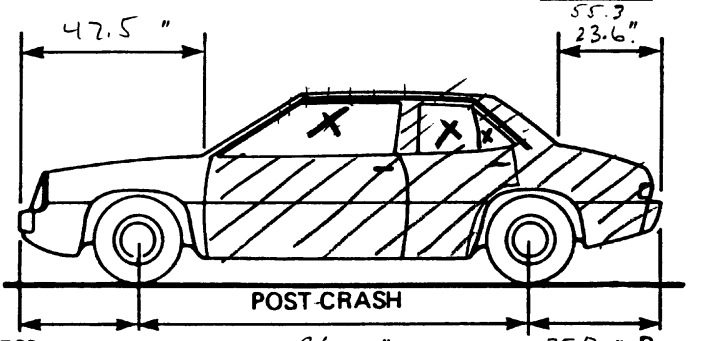

Bumper corner 30.4 " 98.6 " 35.8 " Bumper corner

Stringline 33.5 " 38.2" Stringline

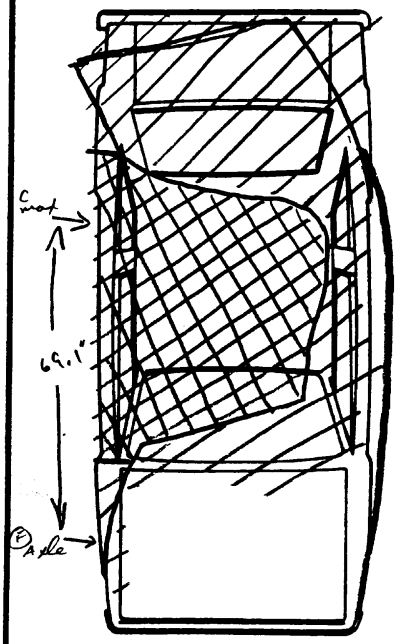

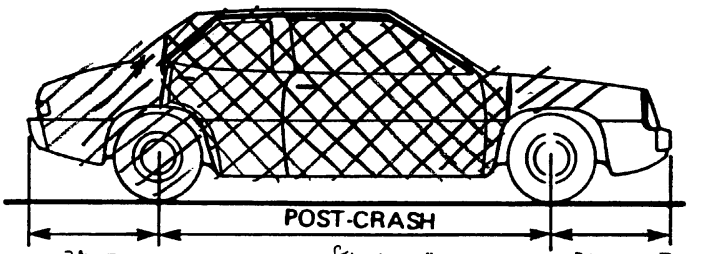

Bumper corner 38.5 " 81.6 " 31.3 " Bumper corner

Stringline 53.6 " 35.1 " Stringline

NOTES: Sketch new perimeter and cross hatch direct damage and single hatch induced damage on all views. Annotate observations which might be useful in reconstructing the accident (e.g., grass in tire bead, direction of striations, scuff on sidewall, etc.). If pulling trailer, sketch type of trailer and damage received on the back of this page.
Annotate any damage caused by extrication such as component removal by torching, prying, or hydraulic shears.

CDC WORKSHEET

CODES FOR OBJECT CONTACTED

(01-30) — Vehicle Number

Noncollision
- (31) Overturn — rollover
- (32) Fire or explosion
- (33) Jackknife
- (34) Other intraunit damage (specify): _____
- (35) Noncollision injury
- (38) Other noncollision (specify): _____
- (39) Noncollision — details unknown

Collision With Fixed Object
- (41) Tree (≤ 4 inches in diameter)
- (42) Tree (> 4 inches in diameter)
- (43) Shrubbery or bush
- (44) Embankment
- (45) Breakaway pole or post (any diameter)

Nonbreakaway Pole or Post
- (50) Pole or post (≤ 4 inches in diameter)
- (51) Pole or post (> 4 inches but ≤ 12 inches in diameter)
- (52) Pole or post (> 12 inches in diameter)
- (53) Pole or post (diameter unknown)
- (54) Concrete traffic barrier
- (55) Impact attenuator
- (56) Other traffic barrier (includes guardrail) (specify): _____
- (57) Fence
- (58) Wall
- (59) Building
- (60) Ditch or culvert
- (61) Ground
- (62) Fire hydrant
- (63) Curb
- (64) Bridge
- (68) Other fixed object (specify): _____
- (69) Unknown fixed object

Collision with Nonfixed Object
- (71) Motor vehicle not in-transport
- (72) Pedestrian
- (73) Cyclist or cycle
- (74) Other nonmotorist or conveyance _____
- (75) Vehicle occupant
- (76) Animal
- (77) Train
- (78) Trailer, disconnected in transport
- (88) Other nonfixed object (specify): _____
- (89) Unknown nonfixed object
- (98) Other event (specify): _____
- (99) Unknown event or object

DEFORMATION CLASSIFICATION BY EVENT NUMBER

Accident Event Sequence Number	Object Contacted	(1) (2) Direction of Force (degrees)	Incremental Value of Shift	(3) Deformation Location	(4) Specific Longitudinal or Lateral Location	(5) Specific Vertical or Lateral Location	(6) Type of Damage Distribution	(7) Deformation Extent
01	02	0~~1~~0 75	00	R	Z	A	W	~~E~~ 9

U.S. Department of Transportation
National Highway Traffic Safety Administration

BEST AVAILABLE

INTERIOR VEHICLE FORM

NATIONAL ACCIDENT SAMPLING SYSTEM
CRASHWORTHINESS DATA SYSTEM

1. Primary Sampling Unit Number 0 9
2. Case Number - Stratum 5 0 4 A
3. Vehicle Number 0 1

INTEGRITY

4. Passenger Compartment Integrity 9 8
   (00) No integrity loss

   Yes, Integrity Was Lost Through
   (01) Windshield ← Apparently cut out
   (02) Door (side)
   (03) Door/hatch (back door)
   (04) Roof
   (05) Roof glass
   (06) Side window
   (07) Rear window (backlight)
   (08) Roof and roof glass
   (09) Windshield and door (side)
   (10) Windshield and roof
   (11) Side and rear window (side window and backlight)
   (12) Windshield and side window
   (13) Door and side window
   (98) Other combination of above (specify): 02, 06, 07
   (99) Unknown

Note: Door opening verified w/ Police report. Door opening not damaged.

Door, Tailgate or Hatch Opening

5. LF 2 6. RF 3 7. LR 3 8. RR 3 9. TG/H 0

(0) No door/gate/hatch
(1) Door/gate/hatch remained closed and operational
(2) Door/gate/hatch came open during collision
(3) Door/gate/hatch jammed shut
(8) Other (specify):
(9) Unknown

Damage/Failure Associated with Door, Tailgate or Hatch Opening in Collision. If IV05-IV09 ≠ 2, Then code Ø

10. LF 5 11. RF 0 12. LR 0 13. RR 0 14. TG/H 0

(0) No door/gate/hatch or door not opened

Door, Tailgate or Hatch Came Open During Collision
(1) Door operational (no damage)
(2) Latch/striker failure due to damage
(3) Hinge failure due to damage
(4) Door structure failure due to damage
(5) Door support (i.e., pillar, sill, roof side rail, etc.) failure due to damage
(6) Latch/striker and hinge failure due to damage
(8) Other failure (specify):
(9) Unknown

GLAZING

Glazing Damage from Impact Forces

15. WS 2 16. LF 6 17. RF 6 18. LR 6 19. RR 6
20. BL 6 21. Roof 8 22. Other 6

(0) No glazing damage from impact forces
(2) Glazing in place and cracked from impact forces
(3) Glazing in place and holed from impact forces
(4) Glazing out-of-place (cracked or not) and not holed from impact forces
(5) Glazing out-of-place and holed from impact forces
(6) Glazing disintegrated from impact forces
(7) Glazing removed prior to accident
(8) No glazing
(9) Unknown if damaged

Glazing Damage from Occupant Contact

23. WS 0 24. LF 0 25. RF 0 26. LR 0 27. RR 0
28. BL 0 29. Roof 0 30. Other 0

(0) No occupant contact to glazing or no glazing
(1) Glazing contacted by occupant but no glazing damage
(2) Glazing in place and cracked by occupant contact
(3) Glazing in place and holed by occupant contact
(4) Glazing out-of-place (cracked or not) by occupant contact and not holed by occupant contact
(5) Glazing out-of-place by occupant contact and holed by occupant contact
(6) Glazing disintegrated by occupant contact
(9) Unknown if contacted by occupant

If No Glazing Damage *And* No Occupant Contact or No Glazing, Then Code IV31 Through IV46 As Ø

Type of Window/Windshield Glazing

31. WS 1 32. LF 2 33. RF 2 34. LR 2 35. RR 2
36. BL 2 37. Roof 0 38. Other 2

(0) No glazing contact and no damage, or no glazing
(1) AS-1 — Laminated
(2) AS-2 — Tempered
(3) AS-3 — Tempered-tinted
(4) AS-14 — Glass/Plastic
(8) Other (specify):
(9) Unknown

Window Precrash Glazing Status

39. WS 1 40. LF 2 41. RF 2 42. LR 2 43. RR 2
44. BL 1 45. Roof 0 46. Other 1

(0) No glazing contact and no damage, or no glazing
(1) Fixed
(2) Closed
(3) Partially opened
(4) Fully opened
(9) Unknown

INTRUSION WORKSHEET

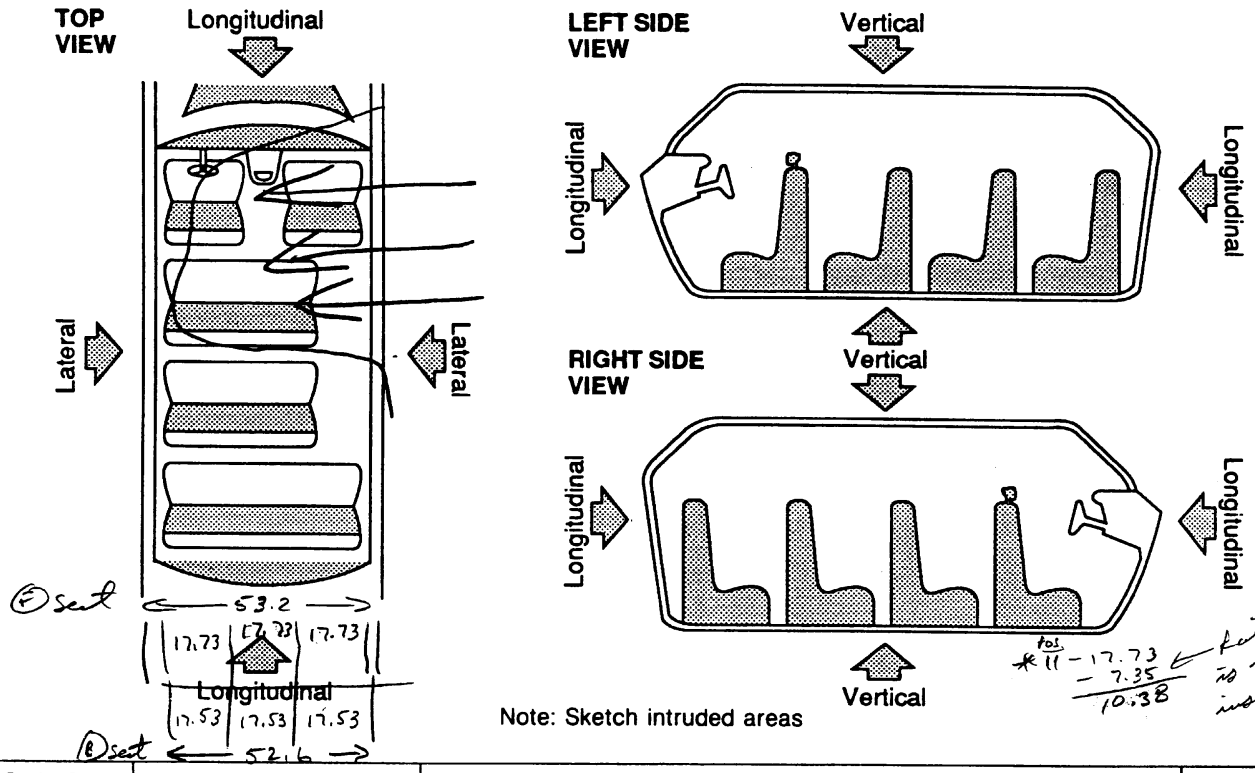

LOCATION OF INTRUSION	INTRUDED COMPONENT	COMPARISON VALUE	–	INTRUDED VALUE	=	INTRUSION	DOMINANT CRUSH DIRECTION
(4) 13	RF Door Panel	52.2	–	10.1 to lower B Pillpanel	=	42.1 / 17.73 max	(4) Lat
(1) 12	"	42.1	–	17.73	=	24.37 / 17.73 max	(1)
11	"	24.37	–	17.73	=	6.64	
13	(R) Roof Side Rail	38.5*	–	9.5 to upper rail	=	29.0 / 10.38 max	
(2) 12	"	29.0	–	10.38	=	18.62 / 17.73 max	(2)
11	"	18.62	–	17.73	=	.89	
(5) 13	A Pillar	51.4	–	15.4 to upper A Pillar	=	36.0 / 17.73 max	(5)
(3) 12	"	36.0	–	17.73	=	18.27 / 17.73 max	(3)
11	"	18.27	–	17.73	=	.54	
(8) 23	RR Door Panel	52.6	–	2.7 to other panel of door	=	49.9 / 17.53 max	(8)
(6) 22	"	49.9	–	17.53	=	32.37 / 17.53 max	(6)
(10) 21	"	32.37	–	17.53	=	14.84	(10)
(9) 23	B Pillar	50.8	–	7.4 to other pillar	=	43.4 / 17.53 max	(9)
(7) 22	"	43.4	–	17.53	=	25.87 / 17.53 max	(7)
21	"	25.87	–	17.53	=	8.34	Lat

Document no more than the 15 most severe intrusions

OCCUPANT AREA INTRUSION

Note: If no intrusions, leave variables IV47-IV86 blank.

	Location of Intrusion	Intruding Component	Magnitude of Intrusion	Dominant Crush Direction
1st	47. 12	48. 10	49. 4	50. 3 ✓
2nd	51. 12	52. 13	53. 4	54. 3 ✓
3rd	55. 12	56. 06	57. 4	58. 3 ✓
4th	59. 13	60. 10	61. 4	62. 3 ✓
5th	63. 13	64. 06	65. 4	66. 3 ✓
6th	67. 22	68. 10	69. 4	70. 3 ✓
7th	71. 22	72. 07	73. 4	74. 3 ✓
8th	75. 23	76. 10	77. 4	78. 3 ✓
9th	79. 23	80. 07	81. 4	82. 3 ✓
10th	83. ~~21~~ 13	84. ~~10~~ 13	85. 4	86. 3 ✓

LOCATION OF INTRUSION

Front Seat
- (11) Left
- (12) Middle
- (13) Right

Second Seat
- (21) Left
- (22) Middle
- (23) Right

Third Seat
- (31) Left
- (32) Middle
- (33) Right

Fourth Seat
- (41) Left
- (42) Middle
- (43) Right

- (97) Catastrophic
- (98) Other enclosed area (specify) _____
- (99) Unknown

INTRUDING COMPONENT

Interior Components
- (01) Steering assembly
- (02) Instrument panel left
- (03) Instrument panel center
- (04) Instrument panel right
- (05) Toe pan
- (06) A-pillar
- (07) B-pillar
- (08) C-pillar
- (09) D-pillar
- (10) Door panel (side)
- (12) Roof (or convertible top)
- (13) Roof side rail
- (14) Windshield
- (15) Windshield header
- (16) Window frame
- (17) Floor pan (includes sill)
- (18) Backlight header
- (19) Front seat back
- (20) Second seat back
- (21) Third seat back
- (22) Fourth seat back
- (23) Fifth seat back
- (24) Seat cushion
- (25) Back door/panel (e.g., tailgate)
- (26) Other interior component (specify): _____
- (27) Side panel - forward of the A-pillar
- (28) Side panel - rear of the A-pillar

Exterior Components
- (30) Hood
- (31) Outside surface of this vehicle (specify): _____
- (32) Other exterior object in the environment (specify): _____
- (33) Unknown exterior object
- (97) Catastrophic
- (98) Intrusion of unlisted component(s) (specify): _____
- (99) Unknown

MAGNITUDE OF INTRUSION

- (1) ≥ 1 inch but < 3 inches
- (2) ≥ 3 inches but < 6 inches
- (3) ≥ 6 inches but < 12 inches
- (4) ≥ 12 inches but < 18 inches
- (5) ≥ 18 inches but < 24 inches
- (6) ≥ 24 inches
- (7) Catastrophic
- (9) Unknown

DOMINANT CRUSH DIRECTION

- (1) Vertical
- (2) Longitudinal
- (3) Lateral
- (7) Catastrophic
- (9) Unknown

STEERING RIM/SPOKE DEFORMATION

COMPARISON VALUE	–	DAMAGE VALUE	=	DEFORMATION
	–		=	
	–		=	
	–		=	
	–		=	

STEERING COLUMN

87. Steering Column Type 1
(1) Fixed column
(2) Tilt column
(3) Telescoping column
(4) Tilt and telescoping column
(8) Other column type (specify): _____
(9) Unknown

88. Blank X X
(This variable is left blank so that numbering consistency can be maintained with the 1988-91 CDS.

89. Blank X X X
(This variable is left blank so that numbering consistency can be maintained with the 1988-91 CDS.

90. Blank X X X
(This variable is left blank so that numbering consistency can be maintained with the 1988-91 CDS.

91. Blank X X X
(This variable is left blank so that numbering consistency can be maintained with the 1988-91 CDS.

92. Steering Rim/Spoke Deformation 2
2.4 Code actual measured deformation to the nearest inch.
(0) No steering rim deformation
(1-5) Actual measured value
(6) 6 inches or more
(8) Observed deformation cannot be measured
(9) Unknown

93. Location of Steering Rim/Spoke Deformation 0 4
(00) No steering rim deformation

Quarter Sections
(01) Section A
(02) Section B
(03) Section C
(04) Section D

Half Sections
(05) Upper half of rim/spoke
(06) Lower half of rim/spoke
(07) Left half of rim/spoke
(08) Right half of rim/spoke

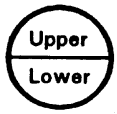

(09) Complete steering wheel collapse
(10) Undetermined location
(99) Unknown

INSTRUMENT PANEL

94. Odometer Reading 0 0 3 ,000
002594 miles—Code mileage to the nearest 1,000 miles
(000) No odometer
(001) Less than 1,500 miles
(300) 299,500 miles or more
(999) Unknown

Source: [redacted]

95. Instrument Panel Damage from Occupant Contact? 0
(0) No
(1) Yes
(9) Unknown

Deformed by impact/intrusion

96. Knee Bolsters Deformed from Occupant Contact? 8
(0) No
(1) Yes
(8) Not present
(9) Unknown

97. Did Glove Compartment Door Open During Collision(s)? 0
(0) No
(1) Yes
(8) Not present
(9) Unknown

VEHICLE INTERIOR SKETCHES

Note area of ejection/entrapment

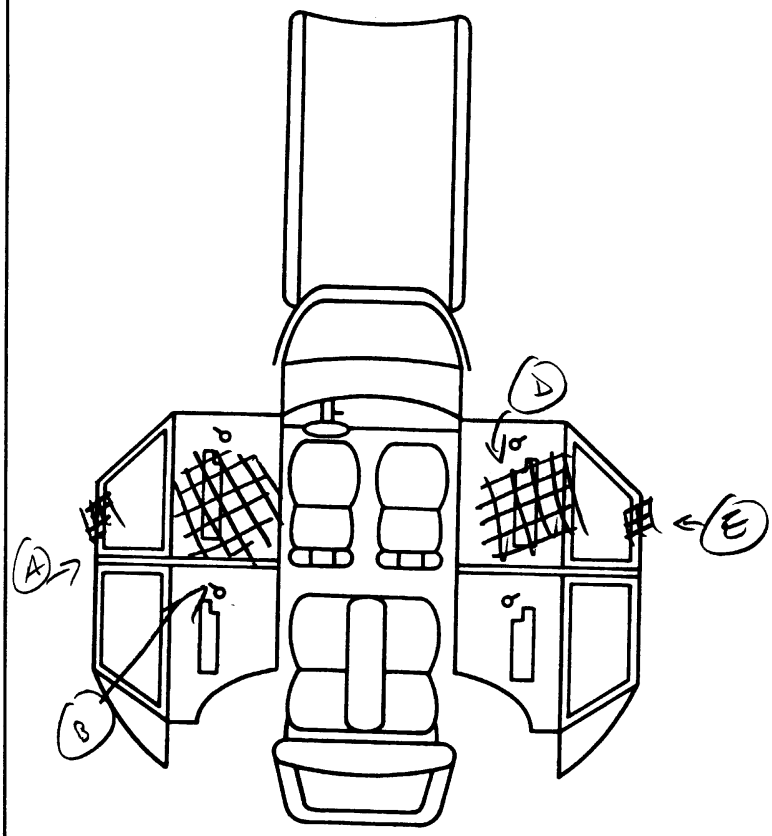

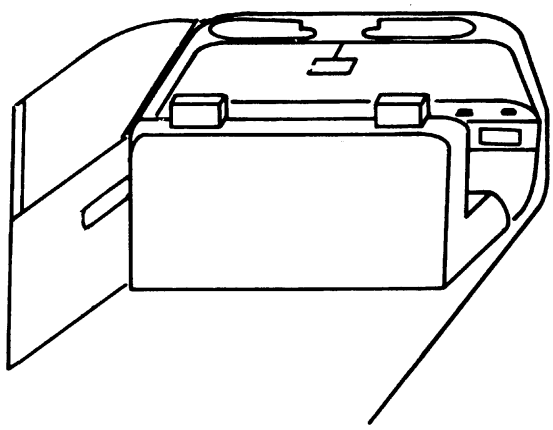

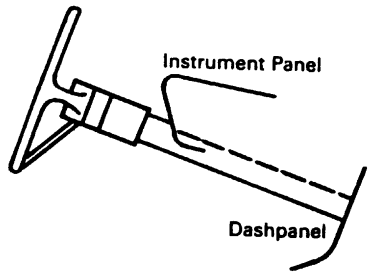

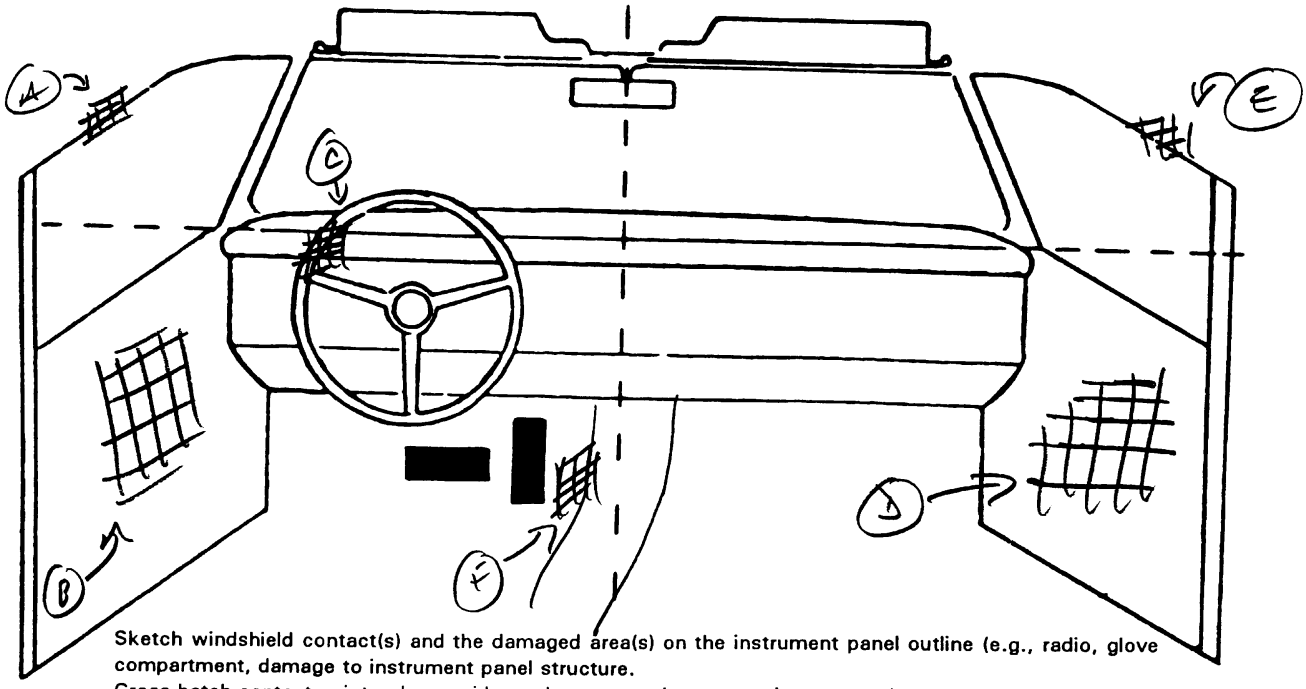

Sketch windshield contact(s) and the damaged area(s) on the instrument panel outline (e.g., radio, glove compartment, damage to instrument panel structure.
Cross hatch contact points, draw spider webs or use other annotation as may be appropriate.
Annotate the contacted area with a letter (begin with A) and list on the Points of Occupant Contact page.

POINTS OF OCCUPANT CONTACT

Contact	Interior Component Contacted	Occupant No. If Known	Body Region If Known	Supporting Physical Evidence	Confidence Level of Contact Point
A	52	1	Head	Intrusion	2
B	21	1	(L) Side	" / Deformation	1
C	04	1	(L) Hand/Arm	Deformation	1
D	31	1	(R) Side	Intrusion / Deformation	1
E	53	1	Head	"	2
F	57	1	(R) leg	Deformation / Intrusion	1
G					
H					
I					
J					
K					
L					
M					
N					

CODES FOR INTERIOR COMPONENTS

FRONT
- (01) Windshield
- (02) Mirror
- (03) Sunvisor
- (04) Steering wheel rim
- (05) Steering wheel hub/spoke
- (06) Steering wheel (combination of codes 04 and 05)
- (07) Steering column, transmission selector lever, other attachment
- (08) Add on equipment (e.g., CB, tape deck, air conditioner)
- (09) Left instrument panel and below
- (10) Center instrument panel and below
- (11) Right instrument panel and below
- (12) Glove compartment door
- (13) Knee bolster
- (14) Windshield including one or more of the following: front header, A-pillar, instrument panel, mirror, or steering assembly (driver side only)
- (15) Windshield including one or more of the following: front header, A-pillar, instrument panel, or mirror (passenger side only)
- (16) Other front object (specify): _____

LEFT SIDE
- (20) Left side interior surface, excluding hardware or armrests
- (21) Left side hardware or armrest
- (22) Left A pillar
- (23) Left B pillar
- (24) Other left pillar (specify): _____
- (25) Left side window glass or frame
- (26) Left side window glass including one or more of the following: frame, window sill, A pillar, B pillar, or roof side rail.
- (27) Other left side object (specify): _____
- (28) Left side window sill

RIGHT SIDE
- (30) Right side interior surface, excluding hardware or armrests
- (31) Right side hardware or armrest
- (32) Right A pillar
- (33) Right B pillar
- (34) Other right pillar (specify): _____
- (35) Right side window glass or frame
- (36) Right side window glass including one or more of the following: frame, window sill, A pillar, B pillar, or roof side rail.
- (37) Other right side object (specify): _____
- (38) Right side window sill

INTERIOR
- (40) Seat, back support
- (41) Belt restraint webbing/buckle
- (42) Belt restraint B-pillar attachment point
- (43) Other restraint system component (specify): _____
- (44) Head restraint system
- (45) Air bag
- (46) Other occupants (specify): _____
- (47) Interior loose objects
- (48) Child safety seat (specify): _____
- (49) Other interior object (specify): _____

ROOF
- (50) Front header
- (51) Rear header
- (52) Roof left side rail
- (53) Roof right side rail
- (54) Roof or convertible top

FLOOR
- (56) Floor (including toe pan)
- (57) Floor or console mounted transmission lever, including console
- (58) Parking brake handle
- (59) Foot controls including parking brake

REAR
- (60) Backlight (rear window)
- (61) Backlight storage rack, door, etc.
- (62) Other rear object (specify): _____

CONFIDENCE LEVEL OF CONTACT POINT
- (1) Certain
- (2) Probable
- (3) Possible
- (9) Unknown

AUTOMATIC RESTRAINTS

NOTES: Encode the data for each applicable front seat position. The attribute for the variables may be found below. Restraint systems should be assessed during the vehicle inspection then coded on the Occupant Assessment Form.

AIR BAGS

		Left	Right
FIRST	Availability/Function		
	Deployment		
	Failure		

Air Bag System Availability/Function
(0) Not equipped/not available
(1) Air bag

Non-functional
(2) Air bag disconnected (specify): _____
(3) Air bag not reinstalled
(9) Unknown

Air Bag System Deployment
(0) Not equipped/not available
(1) Air bag deployed during accident (as a result of impact)
(2) Air bag deployed inadvertently just prior to accident
(3) Air bag deployed, accident sequence undetermined
(4) Nondeployed
(5) Unknown if deployed
(6) Air bag deployed as a result of a noncollision event during accident sequence (e.g., fire, explosion, electrical)
(9) Unknown

Did Air Bag System Fail?
(0) Not equipped/not available
(1) No
(2) Yes (specify): _____
(9) Unknown

AUTOMATIC BELTS

		Left	Right
FIRST	Availability/Function	1	1
	Use	1	2
	Type	1	1
	Proper Use	1	0
	Failure Modes	1	0

Automatic (Passive) Belt System Availability/Function
(0) Not equipped/not available
(1) 2 point automatic belts
(2) 3 point automatic belts
(3) Automatic belts - type unknown

Non-functional
(4) Automatic belts destroyed or rendered inoperative
(9) Unknown

Automatic (Passive) Belt System Use
(0) Not equipped/not available/destroyed or rendered inoperative
(1) Automatic belt in use
(2) Automatic belt not in use (manually disconnected, motorized track inoperative)
(3) Automatic belt use unknown
(9) Unknown

Automatic (Passive) Belt System Type
(0) Not equipped/not available
(1) Non-motorized system
(2) Motorized system
(9) Unknown

Proper Use of Automatic (Passive) Belt System
(0) Not equipped/not available/not used
(1) Automatic belt used properly
(2) Automatic belt used properly with child safety seat

Automatic Belt Used Improperly
(3) Automatic shoulder belt worn under arm
(4) Automatic shoulder belt worn behind back
(5) Automatic belt worn around more than one person
(6) Lap portion of automatic belt worn on abdomen
(7) Automatic lap and shoulder belt or automatic shoulder belt used improperly with child safety seat (specify): _____
(8) Other improper use of automatic belt system (specify): _____
(9) Unknown

Automatic (Passive) Belt Failure Modes During Accident
(0) Not equipped/not available/not in use
(1) No automatic belt failure(s)
(2) Torn webbing (stretched webbing not included)
(3) Broken buckle or latchplate
(4) Upper anchorage separated
(5) Other anchorage separated (specify): _____
(6) Broken retractor
(7) Combination of above (specify):
(8) Other automatic belt failure (specify): _____
(9) Unknown

MANUAL RESTRAINTS

NOTES: Encode the applicable data for each seat position in the vehicle. The attribute for the variable may be found below. Restraint systems should be assessed during the vehicle inspection then coded on the Ocupant Assessment Form.

If a Child safety seat is present, encode the data on the back of this page.

If the vehicle has automatic restraints available, encode the appropriate data on the back of the previous page.

		Left	Center	Right
FIRST	Availability	3		3
	Use	00 No Apparent use (check)		00
	Failure Modes	0		0
SECOND	Availability	4	3	4
	Use	00	00	00
	Failure Modes	0	0	0
THIRD	Availability			
	Use			
	Failure Modes			
OTHER	Availability			
	Use			
	Failure Modes			

Manual (Active) Belt System Availability

(0) None available
(1) Belt removed/destroyed
(2) Shoulder belt
(3) Lap belt
(4) Lap and shoulder belt
(5) Belt available - type unknown

Integral Belt Partially Destroyed

(6) Shoulder belt (lap belt destroyed/removed)
(7) Lap belt (shoulder belt destroyed/removed)

(8) Other belt (specify): _____

(9) Unknown

Manual (Active) Belt System Use

(00) None used, not available, or belt removed/destroyed
(01) Inoperable (specify): _____
(02) Shoulder belt
(03) Lap belt
(04) Lap and shoulder belt
(05) Belt used - type unknown
(08) Other belt used (specify): _____
(12) Shoulder belt used with child safety seat
(13) Lap belt used with child safety seat
(14) Lap and shoulder belt used with child safety seat
(15) Belt used with child safety seat - type unknown
(18) Other belt used with child safety seat (specify): _____
(99) Unknown if belt used

Manual (Active) Belt Failure Modes During Accident

(0) No manual belt used or not available
(1) No manual belt failure(s)
(2) Torn webbing (stretched webbing not included)
(3) Broken buckle or latchplate
(4) Upper anchorage separated
(5) Other anchorage separated (specify): _____
(6) Broken retractor
(7) Combination of above (specify): _____
(8) Other manual belt failure (specify): _____
(9) Unknown

CHILD SAFETY SEAT FIELD ASSESSMENT

When a child safety seat is present enter the occupant's number in the first row and complete the column below the occupant's number using the codes listed below. Complete a column for each child safety seat present.

Occupant Number						
1. Type of Child Safety Seat						
2. Child Safety Seat Orientation						
3. Child Safety Seat Harness Usage						
4. Child Safety Seat Shield Uasge						
5. Child Safety Seat Tether Usage						
6. Child Safety Seat Make/Model	Specify Below for Each Child Safety Seat					

1. Type of Child Safety Seat

   (0) No child safety seat
   (1) Infant seat
   (2) Toddler seat
   (3) Convertible seat
   (4) Booster seat
   (7) Other type child safety seat (specify): _____
   (8) Unknown child safety seat type
   (9) Unknown if child safety seat used

2. Child Safety Seat Orientation

   (00) No child safety seat

   Designed for Rear Facing for This Age/Weight
   (01) Rear facing
   (02) Forward facing
   (08) Other orientation (specify): _____
   (09) Unknown orientation

   Designed for Forward Facing for This Age/Weight
   (11) Rear facing
   (12) Forward facing
   (18) Other orientation (specify): _____
   (19) Unknown orientation

   Unknown Design or Orientation For This Age/Weight, or Unknown Age/Weight
   (21) Rear facing
   (22) Forward facing
   (28) Other orientation (specify): _____
   (29) Unknown orientation

   (99) Unknown if child safety seat used

3. Child Safety Seat Harness Usage

4. Child Safety Seat Shield Usage

5. Child Safety Seat Tether Usage
   Note: Options Below Are Used for Variables 3-5.

   (00) No child safety seat

   Not Designed with Harness/Shield/Tether
   (01) After market harness/shield/tether added, not used
   (02) After market harness/shield/tether used
   (03) Child safety seat used, but no after market harness/shield/tether added
   (09) Unknown if harness/shield/tether added or used

   Designed With Harness/Shield/Tether
   (11) Harness/shield/tether not used
   (12) Harness/shield/tether used
   (19) Unknown if harness/shield/tether used

   Unknown If Designed With Harness/Shield/Tether
   (21) Harness/shield/tether not used
   (22) Harness/shield/tether used
   (29) Unknown if harness/shield/tether used

   (99) Unknown if child safety seat used

6. Child Safety Seat Make/Model
   (Specify make/model and occupant number)

   _____
   _____
   _____
   _____

HEAD RESTRAINTS/SEAT EVALUATION

NOTES: Encode the applicable data for each seat position in the vehicle. The attribute for these variables may be found at the bottom of the page. Head restraint type/damage and seat type/performance should be assessed during the vehicle inspection then coded on the Occupant Assessment Form.

		Left	Center	Right
FIRST	Head Restraint Type/Damage	4		4
	Seat Type	01		01
	Seat Performance	6a		6a
	Seat Orientation	1		1
SECOND	Head Restraint Type/Damage	2	0	1
	Seat Type	07	07	07
	Seat Performance	6b	6b	6b
	Seat Orientation	1	1	1
THIRD	Head Restraint Type/Damage			
	Seat Type			
	Seat Performance			
	Seat Orientation			
OTHER	Head Restraint Type/Damage			
	Seat Type			
	Seat Performance			
	Seat Orientation			

Head Restraint Type/Damage by Occupant at This Occupant Position

(0) No head restraints
(1) Integral — no damage
(2) Integral — damaged during accident
(3) Adjustable — no damage
(4) Adjustable — damaged during accident
(5) Add-on — no damage
(6) Add-on — damaged during accident
(8) Other Specify): _____
(9) Unknown

Seat Type (this Occupant Position)

(00) No seat
(01) Bucket
(02) Bucket with folding back
(03) Bench
(04) Bench with separate back cushions
(05) Bench with folding back(s)
(06) Split bench with separate back cushions
(07) Split bench with folding back(s)
(08) Pedestal (i.e., column supported)
(09) Other seat type (specify): _____
(10) Box mounted seat (i.e., van type)
(99) Unknown

Seat Performance (this Occupant Position)

(0) No seat
(1) No seat performance failure(s)
(2) Seat adjusters failed
(3) Seat back folding locks or "seat back" failed specify: _____
(4) Seat tracks/anchors failed
(5) Deformed by impact of occupant
(6) Deformed by passenger compartment intrusion (specify): (c) B Pillar / (a) Door Panel (b) Rt door panel, c Pillar
(7) Combination of above (specify): _____
(8) Other (specify): _____
(9) Unknown

Seat Orientation (this Occupant Position)

(0) No seat
(1) Forward facing seat
(2) Rear facing seat
(3) Side facing seat (inward)
(4) Side facing seat (outward)
(8) Other (specify): _____
(9) Unknown

DESCRIBE ANY INDICATION OF ABNORMAL OCCUPANT POSTURE (I.E., UNUSUAL OCCUPANT CONTACT PATTERN)

NONE

EJECTION/ENTRAPMENT DATA

Complete the following if the researcher has any indication that an occupant was either ejected from or entrapped in the vehicle. Code the appropriate data on the Occpant Assessment Form.

EJECTION No [ ] Yes [X]

Describe indications of ejection and body parts involved in partial ejection(s):

Probable ejection of Occ #1 thru LF door and RF window
(post impact) (during impact)

Occupant Number	1					
Ejection	1					
(Note on Vehicle Interior Sketch) Ejection Area	2, 3					
Ejection Medium	1					
Medium Status	2					

Ejection
(1) Complete ejection
(1) Partial ejection
(3) Ejection, Unknown degree
(9) Unknown

Ejection Area
(1) Windshield
(2) Left front
(3) Right front
(4) Left rear
(5) Right rear
(6) Rear
(7) Roof
(8) Other area (e.g., back of pickup, etc.) (specify): _____
(9) Unknown

Ejection Medium
(1) Door/hatch/tailgate
(2) Nonfixed roof structure
(3) Fixed glazing
(4) Nonfixed glazing (specify): _____
(5) Integral structure
(8) Other medium (specify): _____
(9) Unknown

Medium Status (Immediately Prior to Impact)
(1) Open
(2) Closed
(3) Integral structure
(9) Unknown

ENTRAPMENT No [X] Yes [ ]

Describe entrapment mechanism: _____

NONE

Component(s): _____

(Note in vehicle interior diagram)

26. Seat Type (this Occupant Position) 0 1
(00) Occupant not seated or no seat
(01) Bucket
(02) Bucket with folding back
(03) Bench
(04) Bench with separate back cushions
(05) Bench with folding back(s)
(06) Split bench with separate back cushions
(07) Split bench with folding back(s)
(08) Pedestal (i.e., column supported)
(09) Other seat type (specify):
(10) Box mounted seat (i.e., van type)
(99) Unknown

27. Seat Performance (this Occupant Position) 6
(0) Occupant not seated or no seat
(1) No seat performance failure(s)
(2) Seat adjusters failed
(3) Seat back folding locks or "seat back" failed
(4) Seat track/anchors failed
(5) Deformed by impact of occupant
(6) Deformed by passenger compartment intrusion (specify): B PILLAR, RF DOOR PANEL
(7) Combination of above (specify):
(8) Other (specify):
(9) Unknown

CHILD SAFETY SEAT

28. Child Safety Seat Make/Model 0 0 0
(000) No child safety seat
Applicable codes are found in your NASS CDS Data Collection, Coding and Editing
(950) Built-in child safety seat
(997) Other make/model (specify):
(998) Unknown make/model
(999) Unknown if child safety seat used

29. Type of Child Safety Seat 0
(0) No child safety seat
(1) Infant seat
(2) Toddler seat
(3) Convertible seat
(4) Booster seat
(7) Other type child safety seat (specify):
(8) Unknown child safety seat type
(9) Unknown if child safety seat used

30. Child Safety Seat Orientation 0 0
(00) No child safety seat

Designed for Rear Facing for This Age/Weight
(01) Rear facing
(02) Forward facing
(08) Other orientation (specify):
(09) Unknown orientation

Designed For Forward Facing for This Age/Weight
(11) Rear facing
(12) Forward facing
(18) Other orientation (specify):
(19) Unknown orientation

Unknown Design or Orientation For This Age/Weight, or Unknown Age/Weight
(21) Rear facing
(22) Forward facing
(28) Other orientation (specify):
(29) Unknown orientation

(99) Unknown if child safety seat used

31. Child Safety Seat Harness Usage 0 0

32. Child Safety Seat Shield Usage 0 0

33. Child Safety Seat Tether Usage 0 0
Note: Options below applicable to Variables OA31-OA33.
(00) No child safety seat

Not Designed With Harness/Shield/Tether
(01) After market harness/shield/tether added, not used
(02) After market harness/shield/tether used
(03) Child safety seat used, but no after market harness/shield/tether added
(09) Unknown if harness/shield/tether added or used

Designed With Harness/Shield/Tether
(11) Harness/shield/tether not used
(12) Harness/shield/tether used
(19) Unknown if harness/shield/tether used

Unknown If Designed With Harness/Shield/Tether
(21) Harness/shield/tether not used
(22) Harness/shield/tether used
(29) Unknown if harness/shield/tether used

(99) Unknown if child safety seat used

PSU NUMBER 09

CASE NUMBER 504A

VEHICLE NUMBER 01

OCCUPANT NUMBER 01

OCCUPANT INJURY FORM

THE FOLLOWING DATA IS NOT INCLUDED IN THIS CASE:

[✓] ENTIRE FORM

[] PAGE NUMBER (S) _____

09-504A

NASS CODING CHANGE 1st Review: 1A 2nd Review:

National Accident Sampling System-Crashworthiness Data System: Occupant Injury Form V1 01

OCCUPANT INJURY DATA SUPPLEMENT

	Source of Injury Data	Body Region	Aspect	Lesion	System Organ	A.I.S. Severity	Injury Source	Injury Source Confidence Level	Direct/ Indirect Injury	Occupant Area Intrusion No.
							NASS CODING CHANGE 1st Review: 1E 2nd Review:			
26 -	1	M	I	L	G	2	~~31~~ 30	2	1	01
27 -	1	H	S	C	I	2	~~33~~ 53	~~1~~ 3	1	~~0~~ 0 ~~1~~ 2
28 -	1	F	R	C	O	1	~~33~~ 73	1	1	~~0~~ 0 ~~1~~ 0
29 -	1	~~O~~ F	L	~~A~~ A	~~A~~ I	2	41	~~1~~ 3	1	00
30 -	1	A	R	L	I	1	30	~~1~~ 2	1	01
31 -	1	A	L	A	I	1	~~20~~ 41	~~1~~ 3	1	0 ~~1~~ 0
32 -	1	A	R	A	I	1	30	2	1	01
33 -	1	M	~~L~~ R	A	I	1	31	2	1	0 1
34 -	1	Y	R	C	I	2	30	2	1	01
35 -	1	Y	R	A	I	1	~~20~~ 57	2	1	0 ~~1~~ 0
36 -	1	T	R	L	I	1	31	2	1	0 ~~0~~ 1
37 -	1	T	L	C	I	1	~~10~~ 21	2	1	00
38	1	N	L	A	I	1	41	3	1	00
39	1	T	R	C	I	1	31	2	1	01

HS Form 433F (1/92)

U.S. Department of Transportation
National Highway Traffic Safety Administration

UPDATE FORM

NATIONAL ACCIDENT SAMPLING SYSTEM
CRASHWORTHINESS DATA SYSTEM

1. Primary Sampling Unit Number: 09
2. Case Number — Stratum: 504A
3. Vehicle Number: 01
4. Occupant Number: 01

[redacted] 1992 AUT

Driver or Occupant Name: [redacted]

Address: [redacted]

Other Information: AUTOPSY

(Sanitize this section prior to Update submission.)

UPDATED CASE INFORMATION

	INITIAL SUBMISSION	UPDATED INFORMATION
GV12. Alcohol Test Result Result for Driver	00	00
GV39. Other Drug Specimen Test Type for Driver	0	7
GV40.-GV41. Narcotic Drug	00	01
GV42.-GV43. Depressant Drug	00	01
GV44.-GV45. Stimulant Drug	00	01
GV46.-GV47. Hallucinogen Drug	00	01
GV48.-GV49. Cannabinoid Drug	00	01
GV50.-GV51. Phencyclidine (PCP)	00	01
GV52.-GV53. Inhalant Drug	00	01
GV54.-GV55. Other Drug (Excluding Nicotine, Aspirin, Alcohol, Drugs Administered Post-Crash)	00	01
GV56. Driver's Zip Code	[redacted]	
GV57. Driver's Race/Ethnic Origin	9	per Autopsy 6
OA05. Occupant's Age	31	31
OA06. Occupant's Sex	2	2
OA07. Occupant's Height	99	64
OA08. Occupant's Weight	999	154
OA17. Manual (Active) Belt System Availability	3	3
OA18. Manual (Active) Belt System Use	03	03

	INITIAL SUBMISSION	UPDATED INFORMATION
OA21. Air Bag System Availability/Function	0	0
OA22. Air Bag System Deployment	0	0
OA35. Treatment - Mortality	1	1
OA36. Type of Medical Facility (for Initial Treatment)	0	0
OA37. Hospital Stay	00	00
OA38. Working Days Lost	62	62
OA39. Time to Death	01	01
OA40. 1st Medically Reported Cause of Death	99	99
OA41. 2nd Medically Reported Cause of Death	00	00
OA42. 3rd Medically Reported Cause of Death	00	00
OA43. Number of Recorded Injuries for This Occupant	97	37
OA44. Automatic (Passive) Belt System Availability/Function	1	1
OA45. Automatic (Passive) Belt System Use	1	1
OA50. Glasgow Coma Scale (GCS) Score	97	01
OA51 Was the Occupant Given Blood?	1	1
OA52. Arterial Blood Gases (ABG) - HCO_3	97	01
____. _____	____	____
____. _____	____	____

HS Form 433C (Rev. 1/92)

STATUS OF LOG INJURY INFORMATION

	INITIAL SUBMISSION	UPDATED INFORMATION
OAL12. Injury Treatment Status	1	1
OAL13. Injury Information		
Official		
a. Autopsy (invasive examination)	B 0 8	1 1
b. Post-ER medical record which includes information about death based on non-invasive examination	B	
c. Admission record/summary or admission/discharge face sheet	B	
d. Discharge summary	B	
e. Operative report	B	
f. Radiographic record(s) post ER visit	B	
g. History and physical examination and/or consultation records	B	
h. Emergency room records	B	
i. Radiographic record(s) associated with ER visit	B	
j. Private physician	B	
Unofficial		
k. Lay coroner	B	
l. EMS record	B	
m. Interviewee	B 1 0	1 0
n. Other source (specify):	B	B
o. Police report	B 1 1	B 1 1
OAL14. Medical Facility Code	9 8	9 8
OIL07. Date Official Medical Data Obtained	[redacted]	

INJURY DATA CODED ON INITIAL SUBMISSION

	Source of Injury Data	O.I.C.-A.I.S Body Region	Aspect	Lesion	System Organ	A.I.S. Severity	Injury Source	Injury Source Confidence Level	Direct/ Indirect Injury	Occupant Area Intrusion No.
1st	5.	6.	7.	8.	9.	10.	11.	12.	13.	14.
2nd	15.	16.	17.	18.	19.	20.	21.	22.	23.	24.
3rd	25.	26.	27.	28.	29.	30.	31.	32.	33.	34.
4th	35.	36.	37.	38.	39.	40.	41.	42.	43.	44.
5th	45.	46.	47.	48.	49.	50.	51.	52.	53.	54.
6th	55.	56.	57.	58.	59.	60.	61.	62.	63.	64.
7th	65.	66.	67.	68.	69.	70.	71.	72.	73.	74.
8th	75.	76.	77.	78.	79.	80.	81.	82.	83.	84.
9th	85.	86.	87.	88.	89.	90.	91.	92.	93.	94.
10th	95.	96.	97.	98.	99.	100.	101.	102.	103.	104.
11th	105.	106.	107.	108.	109.	110.	111.	112.	113.	114.
12th	115.	116.	117.	118.	119.	120.	121.	122.	123.	124.
13th	125.	126.	127.	128.	129.	130.	131.	132.	133.	134.
14th	135.	136.	137.	138.	139.	140.	141.	142.	143.	144.
15th	145.	146.	147.	148.	149.	150.	151.	152.	153.	154.

Note: Keep a photocopy of the following original submitted pages when applicable: Exterior Vehicle Form pages 2, 3, 4; Interior Vehicle Form pages 1-reverse, 2, 4, 5; Occupant Injury Form pages 2, 3, 3-reverse; Interview Form pages 3, 4, 5.

INJURY DATA

Record below the actual injuries sustained by this occupant that were identified from the official and unofficial data sources. Remember not to double count an injury just because it was identified from two different sources. If greater than ten injuries have been documented, encode the balance on the Occupant Injury Supplement.

	Source of Injury Data	O.I.C.-A.I.S Body Region	Aspect	Lesion	System Organ	A.I.S. Severity	Injury Source	Injury Source Confidence Level	Direct/ Indirect Injury	Occupant Area Intrusion No.
1st-	5. 1	6. H	7. R	8. F	9. S	10. ~~3~~ 2	11. ~~33~~ 73	12. ~~1~~ 2	13. 1	14. ~~97~~ 00
2nd-	15. 1	16. H	17. I	18. F	19. S	20. 3	21. ~~33~~ 73	22. ~~1~~ 2	23. 1	24. ~~97~~ 00
3rd-	25. 1	26. H	27. I	28. F	29. S	30. 3	31. ~~33~~ 73	32. ~~1~~ 2	33. 1	34. ~~97~~ 00
4th-	35. 1	36. F	37. I	38. F	39. S	40. 2	41. ~~33~~ 73	42. ~~1~~ 2	43. 1	44. ~~97~~ 00
5th-	45. 1	46. F	47. R	48. F	49. S	50. 1	51. ~~33~~ 73	52. ~~1~~ 2	53. 1	54. ~~97~~ 00
6th-	55. 1	56. F	57. C	58. F	59. S	60. 1	61. ~~33~~ 73	62. ~~1~~ 3	63. 1	64. ~~97~~ 00
7th-	65. 1	66. C	67. B	68. F	69. S	70. 4	71. 30	72. 1	73. 1	74. 01
8th-	75. 1	76. C	77. C	78. F	79. S	80. 2	81. 30	82. 1	83. 1	84. 01
9th-	85. 1	86. A	87. R	88. F	89. S	90. 2	91. 30	92. 1	93. 1	94. 01
10th-	95. 1	96. A	97. L	98. F	99. S	100. 2	101. 20	102. 2	103. 1	104. 00

If greater than 10 injuries, continue on reverse side. If greater than 25 injuries, code additional on Occupant Injury Data Supplement.

OCCUPANT INJURY DATA

NASS CODING CHANGE
1st Review: 1E
2nd Review:

	Source of Injury Data	O.I.C.-A.I.S Body Region	Aspect	Lesion	System Organ	A.I.S. Severity	Injury Source	Injury Source Confidence Level	Direct/ Indirect Injury	Occupant Area Intrusion No.
11th-	1	W	L	D	J	3	04	~~2~~ 3	1	00
12th-	1	H	W	U	B	3	~~33~~ 73	~~1~~ 2	1	~~07~~ 00
13th-	1	H	I	L	B	4	33	1	1	07
14th-	1	H	I	C	B	3	33	1	1	07
15th-	1	H	~~L~~ S	L	B	4	33	1	1	07
16th-	1	H	I	L	B	6	33	1	1	07
17th-	1	C	C	E	A	6	30	1	1	01
18th-	1	C	C	L	H	~~4~~ 5	30	1	1	01
19th-	1	C	R	L	P	2	30	1	1	01
20th-	1	C	L	L	P	2	30	1	1	01
21st-	1	C	R	C	P	3	30	1	1	01
22nd-	1	M	L	L	Q	2	~~31~~ 30	2	1	01
23rd-	1	M	R	L	L	~~2~~ 4	~~31~~ 30	2	1	01
24th-	1	M	R	C	K	2	~~31~~ 30	2	1	01
25th-	1	M	R	L	K	2	~~31~~ 30	2	1	01

Coding Change
Rev: 1A

OFFICIAL INJURY DATA — SOFT TISSUE INJURIES

Indicate the Location, Lesion, Detail (size, depth, fracture type, head injury clinical signs and neurological deficits), and Source of all injuries indicated by official sources (or from PAR or other unofficial sources if medical records and interviewee data are unavailable.)

(27) THERE WAS A 4"x3" AREA OF SUBGALEAL PURPLE ECCHYMOSIS LOCATED OVER THE PARIETAL REGIONS SUPERIORLY

(28) THERE WAS ECCHYMOSIS AROUND THE RIGHT PERIORBITAL SOFT TISSUE

(29) THERE WAS LOCATED ON THE LEFT SIDE OF THE FACE AND NECK, AN AREA 7"x7" COMPOSED OF CONFLUENT, LINEAR AND PUNCTATE ABRASION

(30) THE PROXIMAL RIGHT UPPER EXTREMITY SHOWED A LACERATION MEASURING 1/4" ANTERIORLY

(31) BROWN-RED ABRASION LOCATED ON THE ANTERIOR ASPECT OF THE LEFT ARM MEASURING 3"x2"

(33) SCATTERED ALONG THE RIGHT UPPER QUADRANT OF THE ABDOMEN WERE A GROUP OF SIX TAN-BROWN ABRASIONS MEASURING UP TO 2"x1" IN GREATEST DIMENSION

(34) THE RIGHT LOWER EXTREMITY SHOWED MULTIFOCAL AREAS OF CONTUSIONS MEASURING FROM 2-1/2"x1" TO 10"x3". THESE CONTUSIONS WERE LOCATED OVER THE ANTERIOR AND LATERAL ASPECTS OF THE RIGHT THIGH, KNEE AND RIGHT LEG.

(36) THE RIGHT THIGH SHOWED A 4"x2" GAPING LACERATION OF THE MID TO DISTAL PORTION LATERALLY

(35) THERE WERE SCATTERED ABRASIONS LOCATED OVER THE RIGHT KNEE, SHIN AND BACK OF THE FOOT, THE LARGEST MEASURING 2"x1"

(27) THERE WAS A 4"x3" AREA OF SUBGALEAL PURPLE ECCHYMOSIS LOCATED OVER THE PARIETAL REGIONS SUPERIORLY

(32) THERE WAS AN ABRASION LOCATED ON THE LATERAL ASPECT OF THE PROXIMAL RIGHT ARM MEASURING 1 1/2"x1".

THE POSTERIOR ASPECTS OF BOTH DISTAL THIGHS AND POPLITEAL FOSSA (34) (37) SHOWED BLUE CONTUSIONS MEASURING UP TO 3"x2"

(34) THE RIGHT LOWER EXTREMITY SHOWED MULTI-FOCAL AREAS OF CONTUSION, THE LARGEST LOCATED OVER THE CALF ANTERO-MEDIALLY MEASURING 2"x1"

08-5044
VI 01

SOURCE OF INJURY DATA

OFFICIAL

(1) Autopsy records with or without hospital medical records
(2) Hospital medical records other than emergency room (e.g., dishcarge summary)
(3) Emergency room records only (including associated X-rays or other lab reports)
(4) Private physician, walk-in or emergency clinic

UNOFFICIAL

(5) Lay coroner report
(6) E.M.S. personnel
(7) Interviewee
(8) Other source (specify): _____
(9) Police

INJURY SOURCE

FRONT

(01) Windshield
(02) Mirror
(03) Sunvisor
(04) Steering wheel rim
(05) Steering wheel hub/spoke
(06) Steering wheel (combination of codes 04 and 05)
(07) Steering column, transmission selector lever, other attachment
(08) Add on equipment (e.g., CB, tape deck, air conditioner)
(09) Left instrument panel and below
(10) Center instrument panel and below
(11) Right instrument panel and below
(12) Glove compartment door
(13) Knee bolster
(14) Windshield including one or more of the following: front header, A-pillar, instrument panel, mirror, or steering assembly (driver side only)
(15) Windshield including one or more of the following: front header, A-pillar, instrument panel, or mirror (passenger side only)
(16) Other front object (specify): _____

LEFT SIDE

(20) Left side interior surface, excluding hardware or armrests
(21) Left side hardware or armrest
(22) Left A pillar
(23) Left B pillar
(24) Other left pillar (specify): _____
(25) Left side window glass or frame
(26) Left side window glass including one or more of the following: frame, window sill, A-pillar, B-pillar, or roof side rail.
(27) Other left side object (specify): _____
(28) Left side window sill

RIGHT SIDE

(30) Right side interior surface, excluding hardware or armrests
(31) Right side hardware or armrest
(32) Right A pillar
(33) Right B pillar
(34) Other right pillar (specify): _____
(35) Right side window glass or frame
(36) Right side window glass including one or more of the following: frame, window sill, A pillar, B pillar, or roof side rail.
(37) Other right side object (specify): _____
(38) Right side window sill

INTERIOR

(40) Seat, back support
(41) Belt restraint webbing/buckle
(42) Belt restraint B-pillar attachment point
(43) Other restraint system component (specify): _____
(44) Head restraint system
(45) Air bag
(46) Other occupants (specify): _____
(47) Interior loose objects
(48) Child safety seat (specify): _____
(49) Other interior object (specify): _____

ROOF

(50) Front header
(51) Rear header
(52) Roof left side rail
(53) Roof right side rail
(54) Roof or convertible top

FLOOR

(56) Floor (including toe pan)
(57) Floor or console mounted transmission lever, including console
(58) Parking brake handle
(59) Foot controls including parking brake

REAR

(60) Backlight (rear window)
(61) Backlight storage rack, door, etc.
(62) Other rear object (specify): _____

EXTERIOR of OCCUPANT'S VEHICLE

(65) Hood
(66) Outside hardware (e.g., outside mirror, antenna)
(67) Other exterior surface or tires (specify): _____
(68) Unknown exterior objects

EXTERIOR OF OTHER MOTOR VEHICLE

(70) Front bumper
(71) Hood edge
(72) Other front of vehicle (specify): _____
(73) Hood
(74) Hood ornament
(75) Windshield, roof rail, A-pillar
(76) Side surface
(77) Side mirrors
(78) Other side protrusions (specify) _____
(79) Rear surface
(80) Undercarriage
(81) Tires and wheels
(82) Other exterior of other motor vehicle (specify): _____
(83) Unknown exterior of other motor vehicle

OTHER VEHICLE OR OBJECT IN THE ENVIRONMENT

(84) Ground
(85) Other vehicle or object (specify) _____
(86) Unknown vehicle or object

NONCONTACT INJURY

(90) Fire in vehicle
(91) Flying glass
(92) Other noncontact injury source (specify): _____
(93) Air bag exhaust gases
(97) Injured, unknown source

INJURY SOURCE CONFIDENCE LEVEL

(1) Certain
(2) Probable
(3) Possible
(9) Unknown

DIRECT/INDIRECT INJURY

(1) Direct contact injury
(2) Indirect contact injury
(3) Noncontact injury
(7) Injured, unknown source

OCCUPANT INJURY CLASSIFICATION

O.I.C. Body Region

(M) Abdomen
(Q) Ankle—foot
(A) Arm (upper)
(B) Back-thoracolumbar spine
(C) Chest
(E) Elbow
(F) Face
(R) Forearm
(H) Head—skull
(U) Injured, unknown region
(K) Knee
(L) Leg (lower)
(Y) Lower limbs(s) (whole or unknown part)
(N) Neck—cervical spine
(P) Pelvic—hip
(S) Shoulder
(T) Thigh
(X) Upper limb(s) (whole or unknown part)
(O) Whole body
(W) Wrist—hand

Aspect of Injury

(A) Anterior—front
(B) Bilateral (rib fracture only)
(C) Central
(I) Inferior—lower
(U) Injured, unknown aspect
(L) Left
(P) Posterior—back
(R) Right
(S) Superior—upper
(W) Whole region

Lesion

(A) Abrasion
(M) Amputation
(V) Avulsion
(B) Burn
(K) Concussion
(C) Contusion
(N) Crush
(G) Detachment, separation
(D) Dislocation
(F) Fracture
(Z) Fracture and dislocation
(U) Injured, unknown lesion
(L) Laceration
(O) Other
(P) Perforation, puncture
(R) Rupture
(S) Sprain
(T) Strain
(E) Total severance, transection

System/Organ

(W) All systems in region
(A) Arteries—veins
(B) Brain
(D) Digestive
(E) Ears
(O) Eye
(H) Heart
(U) Injured, unknown system
(I) Integumentary
(J) Joints
(K) Kidneys
(L) Liver
(M) Muscles
(N) Nervous system
(P) Pulmonary—lungs
(R) Respiratory
(S) Skeletal
(C) Spinal cord
(Q) Spleen
(T) Thyroid, other endocrine gland
(V) Vertebrae

Abbreviated Injury Scale

(1) Minor injury
(2) Moderate injury
(3) Seriour injury
(4) Severe injury
(5) Critical injury
(6) Maximum (untreatable)
(7) Injured, unknown severity

OFFICIAL INJURY DATA — SKELETAL INJURIES

Restrained?

___ No

X Yes

Blood Alcohol Level (mg/dl)

BAL = Ø

Glasgow Coma Scale Score

GCSS = ____

Units of Blood Given

Units = ____

Aterial Blood Gases

pH = __.__

PO_2 = ____

PCO_2 ____

HCO_3 ____

Indicate the Location, Lesion, Detail (size, depth, fracture type, head injury clinical signs and neurological deficits), and Source of all injuries indicated by official sources (or from PAR or other unofficial sources if medical records and interviewee data are unavailable.)

(1) THE CALVARIUM SHOWED A FRACTURE AND SEPARATION ALONG THE SAGITTAL SUTURE, ALSO ALONG THE CORONAL SUTURE ON THE RIGHT

(4) PALPABLE FRACTURES OF THE NASAL SEPTUM, RIGHT SIDE OF THE MAXILLA AND MANDIBLE

(5) (6)

(9) THERE WAS A FRACTURE OF THE MIDPORTION OF THE RIGHT HUMERUS

(2) THERE WAS A HINGE FRACTURE EXTENDING ON THE ANTERIOR ASPECTS OF BOTH PETROUS RIDGES, THROUGH THE SELLA TURCIA.

(8) THERE WAS A FRACTURE OF THE STERNUM AT ABOUT THE LEVEL OF THE INSERTION OF THE 3RD RIB.

(7) THE LEFT SIDE OF THE CHEST SHOWED FRACTURES OF RIBS #2 THROUGH #11 POSTERIORLY AND #2 THROUGH 7 LATERALLY. LEFT HEMOTHORAX = 200ml.

(10) THE LEFT UPPER EXTREMITY SHOWED A CLOSED FRACTURE OF THE MIDPORTION OF THE HUMERUS

(11) THERE WAS A DISLOCATION OF THE LEFT WRIST, THE HAND DISPLACED DORSALLY

(3) ADDITIONAL FRACTURE FRACTURE LINES WERE NOTED THROUGH THE LESSER WINGS OF THE SPHENOID BILATERALLY AND THROUGH THE RIGHT GREATER WING OF THE SPHENOID BONE

(7) THE RIGHT SIDE OF THE RIBCAGE SHOWED A FRACTURE OF RIBS #2 THROUGH 9 POSTERIORLY AS WELL AS RIBS #2 THROUGH 8 LATERALLY RIGHT HEMOTHORAX = 200ml.

09-504A

V1.01

OFFICIAL INJURY DATA —INTERNAL INJURIES

Indicate the Location, Lesion, Detail (size, depth, fracture type, head injury clinical signs and neurological deficits), and Source of all injuries indicated by official sources (or from PAR or other unofficial sources if medical records and interviewee data are unavailable.)

(13) (14) THERE WERE CONTUSED LACERATIONS ON THE INFERIOR ASPECT OF THE CEREBELLAR HEMISPHERES BI-LATERALLY

(12) THE BRAIN SHOWED DIFFUSE SUBARACHNOID HEMORRHAGE

THE LEPTOMENINGES WERE THIN, DELICATE WITH SUBARACHNOID HEMORRHAGE PRESENT DIFFUSELY OVER THE BRAIN AND BRAIN-STEM (12)

THE DURA MATER AND FALX CEREBRI WERE FOCALLY LACERATED. THERE WAS A SMALL AMOUNT OF EPIDURAL AND SUBDURAL HEMORRHAGE PRESENT (LESS THAN 5ml.) (15)

(18) THERE WAS A 1-1/2" OBLIQUELY ORIENTED LACERATION OF THE RIGHT VENTRICLE OF THE HEART ANTERIORLY

(16) THERE WAS A LACERATION OF THE BRAINSTEM AT THE LEVEL OF THE MID-BRAIN ON THE INFERIOR ASPECT

not called

THE MEDIASTINUM SHOWED DIFFUSE FRESH HEMORRHAGE SURROUNDING THE AORTA GREAT VESSELS, ESOPHAGUS AND TRACHEA.

(19) (20) RIGHT & LEFT FOCAL LACERATIONS OF PARIETAL PLEURA AND A LEFT HEMOTHORAX OF 200ml. RIGHT HEMOTHORAX OF 200 ml.

not called

THERE WAS APPROX. 50 ml OF BLOOD W/IN THE PERITONEAL CAVITY

(17) THE DESCENDING PORTION OF THE THORACIC AORTA SHOWED A COMPLETE TRANSECTION JUST DISTAL TO THE OSTIUM OF THE LEFT SUBCLAVIAN ARTERY

(21) THERE WERE CONTUSIONS TO THE UPPER, MIDDLE AND LOWER LOBES OF THE RIGHT LUNG. THERE WAS EVIDENCE OF ASPIRATION OF BLOOD

(22) THE SPLEEN SHOWED MULTIPLE LACERATIONS OF THE CAPSULE, THE LARGEST MEASURING UP TO 2" x 1/2" LOCATED ON THE LATERAL ASPECT

(23) THERE WERE MULTIPLE LACERATIONS OF THE HEPATIC CAPSULE WITH PULPIFICATION OF THE RIGHT AND LEFT LOBES OF THE LIVER

(26) THERE WAS A LACERATION OF THE ANTERO-SUPERIOR PORTION OF URINARY BLADDER

(24) (25) THE RIGHT KIDNEY WAS REMARKABLE FOR A HEMATOMA, 25 ml OF FRESH BLOOD AND A LACERATION OF THE INFERIOR POLE MEASURING 1" x 1/4"

09-504A
V2

OCCUPANT RELATED

16. Driver Presence in Vehicle 1
(0) Driver not present
(1) Driver present
(9) Unknown

17. Number of Occupants This Vehicle 0 1
(00-96) Code actual number of occupants for this vehicle
(97) 97 or more
(99) Unknown

18. Number of Occupant Forms Submitted 0 1

VEHICLE WEIGHT ITEMS

19. Vehicle Curb Weight 0 2, 7 0 0
2645-2665 Code weight to nearest 100 pounds.
2655
(010) Less than 1050 pounds
(135) 13,500 pounds or more
(999) Unknown

Source: [redacted]

20. Vehicle Cargo Weight 0, 2 0 0
200 Code weight to nearest 100 pounds.
(00) Less than 50 pounds
(97) 9,650 pounds or more
(99) Unknown

RECONSTRUCTION DATA

21. Towed Trailing Unit 0
(0) No towed unit
(1) Yes—towed trailing unit
(9) Unknown

22. Documentation of Trajectory Data for This Vehicle 1
(0) No
(1) Yes

23. Post Collision Condition of Tree or Pole (For Highest Delta V) 0
(0) Not collision (for highest delta V) with tree or pole
(1) Not damaged
(2) Cracked/sheared
(3) Tilted <45 degrees
(4) Tilted ≥45 degrees
(5) Uprooted tree
(6) Separated pole from base
(7) Pole replaced
(8) Other (specify): _____
(9) Unknown

24. Rollover 0
(0) No rollover (no overturning)

Rollover (primarily about the longitudinal axis)
(1) Rollover, 1 quarter turn only
(2) Rollover, 2 quarter turns
(3) Rollover, 3 quarter turns
(4) Rollover, 4 or more quarter turns (specify): _____
(5) Rollover--end-over-end (i.e., primarily about the lateral axis)
(9) Rollover (overturn), details unknown

OVERRIDE/UNDERRIDE (THIS VEHICLE)

25. Front Override/Underride (this Vehicle) 0

26. Rear Override/Underride (this Vehicle) 0

(0) No override/underride, or not an end-to-end impact

Override (see specific CDC)
(1) 1st CDC
(2) 2nd CDC
(3) Other not automated CDC (specify): _____

Underride (see specific CDC)
(4) 1st CDC
(5) 2nd CDC
(6) Other not automated CDC (specify): _____

(7) Medium/heavy truck or bus override
(9) Unknown

HEADING ANGLE AT IMPACT FOR HIGHEST DELTA V

Values: (000)-(359) Code actual value
(997) Noncollision
(998) Impact with object
(999) Unknown

27. Heading Angle For This Vehicle 3 4 5

28. Heading Angle For Other Vehicle 0 7 4

Category	Configuration	ACCIDENT TYPES (Includes Intent)				
I. Single Driver	A. Right Roadside Departure	01 DRIVE OFF ROAD	02 CONTROL/ TRACTION LOSS	03 AVOID COLLISION WITH VEH., PED., ANIM.	04 SPECIFICS OTHER	05 SPECIFICS UNKNOWN
	B. Left Roadside Departure	06 DRIVE OFF ROAD	07 CONTROL/ TRACTION LOSS	08 AVOID COLLISION WITH VEH., PED., ANIM.	09 SPECIFICS OTHER	10 SPECIFICS UNKNOWN
	C Forward Impact	11 PARKED VEH.	12 STA. OBJECT	13 PEDESTRIAN/ ANIMAL	14 END DEPARTURE	15 SPECIFICS OTHER / 16 SPECIFICS UNKNOWN
II Same Trafficway Same Direction	D Rear-End	20 STOPPED 21, 22, 23	24 SLOWER 25, 26, 27	28 DECEL. 29, 30, 31	(EACH • 32) SPECIFICS OTHER	(EACH • 33) SPECIFICS UNKNOWN
	E Forward Impact	34 CONTROL/ TRACTION LOSS 35	36 CONTROL/ TRACTION LOSS 37	38 AVOID COLLISION WITH VEH. 39	40 AVOID COLLISION WITH OBJECT 41	(EACH • 42) SPECIFICS OTHER / (EACH • 43) SPECIFICS UNKNOWN
	F. Sideswipe Angle	44 / 45 / 46 / 47		(EACH • 48) SPECIFICS OTHER		(EACH • 49) SPECIFICS UNKNOWN
III. Same Trafficway Opposite Direction	G Head-On	50 / 51 LATERAL MOVE	(EACH • 52) SPECIFICS OTHER		(EACH • 53) SPECIFICS UNKNOWN	
	H Forward Impact	54 CONTROL/ TRACTION LOSS 55	56 CONTROL/ TRACTION LOSS 57	58 AVOID COLLISION WITH VEH. 59	60 AVOID COLLISION WITH OBJECT 61	(EACH • 62) SPECIFICS OTHER / (EACH • 63) SPECIFICS UNKNOWN
	I. Sideswipe/ Angle	64 / 65 LATERAL MOVE	(EACH • 66) SPECIFICS OTHER		(EACH • 67) SPECIFICS UNKNOWN	
IV. Change Trafficway Vehicle Turning	J. Turn Across Path	68 / 69 INITIAL OPPOSITE DIRECTIONS	70 / 71 INITIAL SAME DIRECTIONS	72 / 73	(EACH • 74) SPECIFICS OTHER	(EACH • 75) SPECIFICS UNKNOWN
	K. Turn Into Path	76 / 77 TURN INTO SAME DIRECTION	78 / 79	80 / 81 TURN INTO OPPOSITE DIRECTIONS	82 / 83	(EACH • 84) SPECIFICS OTHER / (EACH • 85) SPECIFICS UNKNOWN
V. Intersecting Paths (Vehicle Damage)	L. Straight Paths	86 / 87	88 / 89		(EACH • 90) SPECIFICS OTHER	(EACH • 91) SPECIFICS UNKNOWN
VI. Miscellaneous	M. Backing Etc.	92 BACKING VEH. / 93 OTHER VEH. OR OBJECT		98 Other Accident Type 99 Unknown Accident Type 00 No Impact		

OTHER DATA

56. Driver's Zip Code [redacted]

(00000) Driver not present
(00001) Driver not a resident of U.S. or territories
20616 Code actual 5-digit zip code
(99999) Unknown

57. Driver's Race/Ethnic Origin 1
(0) Driver not present
(1) White (non-Hispanic)
(2) Black (non-Hispanic)
(3) White (Hispanic)
(4) Black (Hispanic)
(5) American Indian, Eskimo or Aleut
(6) Asian or Pacific Islander
(8) Other (specify): _____
(9) Unknown

58. Vehicle Special Use (This Trip) 0
(0) No special use
(1) Taxi
(2) Vehicle used as school bus
(3) Vehicle used as other bus
(4) Military
(5) Police
(6) Ambulance
(7) Hearse
(8) Fire truck or car
(9) Unknown

ROLLOVER DATA

If GV07 (Body Type) ≠ 1-49, leave GV59-GV63 blank.
If GV24 (Rollover) = 0, then GV59-GV63 must equal 0.
If GV24 = 9, then GV59-GV63 must equal 9.

59. Rollover Initiation Type 0
(0) No rollover
(1) Trip-over
(2) Flip-over
(3) Turn-over
(4) Climb-over
(5) Fall-over
(6) Bounce-over
(7) Collision with another vehicle
(8) Other rollover initiation type specify): _____
(9) Unknown rollover initiation type

60. Location of Rollover Initiation 0
(0) No rollover
(1) On roadway
(2) On shoulder—paved
(3) On shoulder—unpaved
(4) On roadside or divided trafficway median
(9) Unknown

61. Rollover Initiation Object Contacted 0 0

62. Location on Vehicle Where Initial Principal Tripping Force Is Applied 0
(0) No rollover
(1) Wheels/tires
(2) Side plane
(3) End plane
(4) Undercarriage
(5) Other location on vehicle (specify): _____
(8) Non-contact rollover forces (specify): _____
(9) Unknown

63. Direction of Initial Roll 0
(0) No rollover
(1) Roll right - primarily about the longitudinal axis
(2) Roll left - primarily about the longitudinal axis
(5) End-over-end (i.e., primarily about the lateral axis)
(9) Unknown roll direction

PRECRASH DATA

64. Pre-Event Movement (Prior to Recognition of Critical Event) 0 1
(01) Going straight
(02) Slowing or stopping in traffic lane
(03) Starting in traffic lane
(04) Stopped in traffic lane
(05) Passing or overtaking another vehicle
(06) Disabled or parked in travel lane
(07) Leaving a parking position
(08) Entering a parking position
(09) Turning right
(10) Turning left
(11) Making a U-turn
(12) Backing up (other than for parking position)
(13) Negotiating a curve
(14) Changing lanes
(15) Merging
(16) Successful avoidance maneuver to a previous critical event
(97) Other (specify): _____
(98) No driver present
(99) Unknown

CODES FOR ROLLOVER INITIATION OBJECT CONTACTED

(00) No rollover
(01-30) — Vehicle Number

Noncollision
(31) Turn-over — fall-over
(33) Jackknife

Collision With Fixed Object
(41) Tree (≤ 4 inches in diameter)
(42) Tree (> 4 inches in diameter)
(43) Shrubbery or bush
(44) Embankment

(45) Breakaway pole or post (any diameter)

Nonbreakaway Pole or Post
(50) Pole or post (≤ 4 inches in diameter)
(51) Pole or post (> 4 inches but ≤ 12 inches in diameter)
(52) Pole or post (> 12 inches in diameter)
(53) Pole or post (diameter unknown)

(54) Concrete traffic barrier
(55) Impact attenuator
(56) Other traffic barrier (includes guardrail) (specify):_____

(57) Fence
(58) Wall
(59) Building
(60) Ditch or culvert
(61) Ground
(62) Fire hydrant
(63) Curb
(64) Bridge
(68) Other fixed object (specify):

_____

(69) Unknown fixed object

Collision with Nonfixed Object
(71) Motor vehicle not in-transport
(76) Animal
(77) Train
(78) Trailer, disconnected in transport
(88) Other nonfixed object (specify):

_____

(89) Unknown nonfixed object

(98) Other event (specify):

_____

(99) Unknown event or object

U.S. Department of Transportation
National Highway Traffic Safety Administration

EXTERIOR VEHICLE FORM

NATIONAL ACCIDENT SAMPLING SYSTEM
CRASHWORTHINESS DATA SYSTEM

1. Primary Sampling Unit Number 09
2. Case Number - Stratum 504 A
3. Vehicle Number 02

VEHICLE IDENTIFICATION

VIN 1GCCS14A1N8[redacted] Model Year 92

Vehicle Make (specify): CHEVROLET Vehicle Model (specify): P/u S-10

LOCATOR

Locate the end of the damage with respect to the vehicle longitudinal center line or bumper corner for end impacts or an undamaged axle for side impacts.

Specific Impact No.	Location of Direct Damage	Location of Field L
1	(F) BC TO BC	(F) BC TO BC

CRUSH PROFILE

NOTES: Identify the plane at which the C-measurements are taken (e.g., at bumper, above bumper, at sill, above sill, etc.) and label adjustments (e.g., free space).

Measure and document on the vehicle diagram the location of maximum crush.

52.6
52.6
10.5 2

Measure C1 to C6 from driver to passenger side in front or rear impacts and rear to front in side impacts.

Free space value is defined as the distance between the baseline and the original body contour taken at the individual C locations. This may include the following: bumper lead, bumper taper, side protrusion, side taper, etc. Record the value for each C-measurement and maximum crush.

Use as many lines/columns as necessary to describe each damage profile.

Specific Impact Number	Plane of Impact C-Measurements	Direct Damage Width (CDC)	Direct Damage Max Crush	Field L	C_1	C_2	C_3	C_4	C_5	C_6	±D
1	BUMPER LEVEL	57.4	C_6	52.6	12.9	14.0	17.5	19.9	22.7	35.2	Ø
	-FS	–	–	–	2.0	1.0	.5	.5	1.0	2.0	–
	RESULT	57.4	C_6	52.6	10.9	13.0	17.0	19.4	21.7	33.2	Ø

HS Form 435A (Rev. 1/92)

VEHICLE DAMAGE SKETCH

TIRE – WHEEL DAMAGE

a. Rotation physically restricted		b. Tire deflated	
RF	1	RF	1
LF	1	LF	1
RR	2	RR	2
LR	2	LR	2

(1) Yes (2) No (8) NA (9) Unk.

TYPE OF TRANSMISSION

☒ Manual ☐ Automatic

ORIGINAL SPECIFICATIONS

Wheelbase	108.3
Overall Length	178.2
Maximum Width	64.7
Curb Weight [redacted]	2245-2265
Average Track	?
Front Overhang	31.4
Rear Overhang	38.5
Engine Size: cyl./ displ.	4/2.5l
Undeformed End Width	60.3

WHEEL STEER ANGLES

(For locked front wheels or displaced rear axles only)

RF 25 °
LF 10 °
RR ± — °
LR ± — °

Within ±5 degrees

DRIVE WHEELS

☐ FWD ☒ RWD ☐ 4WD

Approximate Cargo Weight Ø

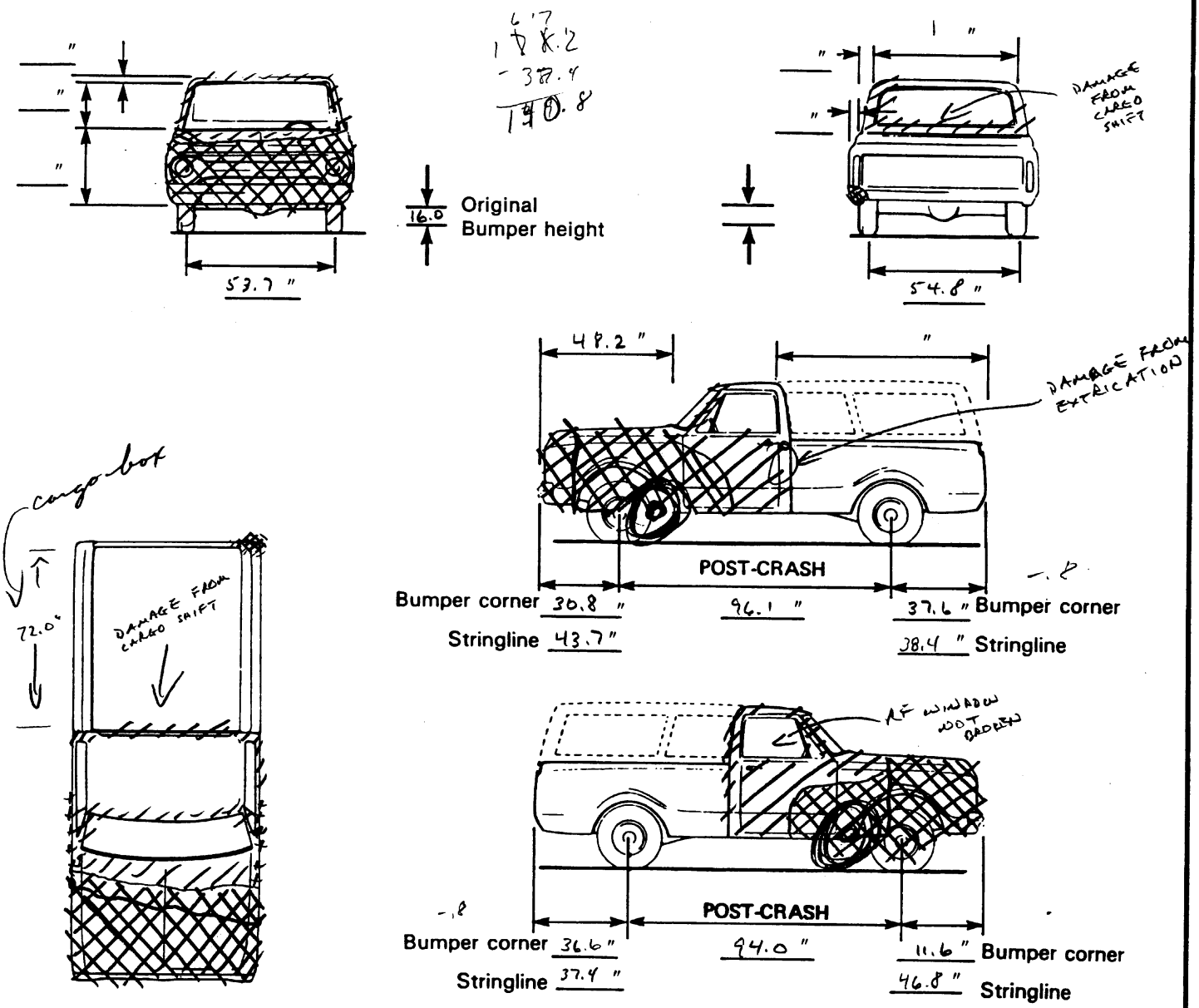

NOTES: Sketch new perimeter and cross hatch direct damage and single hatch induced damage on all views. Annotate observations which might be useful in reconstructing the accident (e.g., grass in tire bead, direction of striations, scuff on sidewall, etc.). If pulling trailer, sketch type of trailer and damage received on the back of this page.
Annotate any damage caused by extrication such as component removal by torching, prying, or hydraulic shears.

CDC WORKSHEET

CODES FOR OBJECT CONTACTED

(01-30) — Vehicle Number

Noncollision
- (31) Overturn — rollover
- (32) Fire or explosion
- (33) Jackknife
- (34) Other intraunit damage (specify): _____
- (35) Noncollision injury
- (38) Other noncollision (specify): _____
- (39) Noncollision — details unknown

Collision With Fixed Object
- (41) Tree (≤ 4 inches in diameter)
- (42) Tree (> 4 inches in diameter)
- (43) Shrubbery or bush
- (44) Embankment
- (45) Breakaway pole or post (any diameter)

Nonbreakaway Pole or Post
- (50) Pole or post (≤ 4 inches in diameter)
- (51) Pole or post (> 4 inches but ≤ 12 inches in diameter)
- (52) Pole or post (> 12 inches in diameter)
- (53) Pole or post (diameter unknown)
- (54) Concrete traffic barrier
- (55) Impact attenuator
- (56) Other traffic barrier (includes guardrail) (specify): _____
- (57) Fence
- (58) Wall
- (59) Building
- (60) Ditch or culvert
- (61) Ground
- (62) Fire hydrant
- (63) Curb
- (64) Bridge
- (68) Other fixed object (specify): _____
- (69) Unknown fixed object

Collision with Nonfixed Object
- (71) Motor vehicle not in-transport
- (72) Pedestrian
- (73) Cyclist or cycle
- (74) Other nonmotorist or conveyance _____
- (75) Vehicle occupant
- (76) Animal
- (77) Train
- (78) Trailer, disconnected in transport
- (88) Other nonfixed object (specify): _____
- (89) Unknown nonfixed object
- (98) Other event (specify): _____
- (99) Unknown event or object

DEFORMATION CLASSIFICATION BY EVENT NUMBER

Accident Event Sequence Number	Object Contacted	(1) (2) Direction of Force (degrees)	Incremental Value of Shift	(3) Deformation Location	(4) Specific Longitudinal or Lateral Location	(5) Specific Vertical or Lateral Location	(6) Type of Damage Distribution	(7) Deformation Extent
01	01	-020	00	F	D	E	W	~~37~~4

U.S. Department of Transportation
National Highway Traffic Safety Administration

INTERIOR VEHICLE FORM

NATIONAL ACCIDENT SAMPLING SYSTEM
CRASHWORTHINESS DATA SYSTEM

1. Primary Sampling Unit Number 0 9
2. Case Number - Stratum 5 0 4 A
3. Vehicle Number 0 2

INTEGRITY

4. Passenger Compartment Integrity 1 1
(00) No integrity loss

Yes, Integrity Was Lost Through
(01) Windshield
(02) Door (side)
(03) Door/hatch (back door)
(04) Roof
(05) Roof glass
(06) Side window
(07) Rear window (backlight)
(08) Roof and roof glass
(09) Windshield and door (side)
(10) Windshield and roof
(11) Side and rear window (side window and backlight)
(12) Windshield and side window
(13) Door and side window
(98) Other combination of above (specify): _____
(99) Unknown

Door, Tailgate or Hatch Opening

5. LF 3 6. RF 3 7. LR 0 8. RR 0 9. TG/H 0

(0) No door/gate/hatch
(1) Door/gate/hatch remained closed and operational
(2) Door/gate/hatch came open during collision
(3) Door/gate/hatch jammed shut
(8) Other (specify): _____
(9) Unknown

Damage/Failure Associated with Door, Tailgate or Hatch Opening in Collision. If IV05-IV09 ≠ 2, Then code Ø

10. LF 0 11. RF 0 12. LR 0 13. RR 0 14. TG/H 0

(0) No door/gate/hatch or door not opened

Door, Tailgate or Hatch Came Open During Collision
(1) Door operational (no damage)
(2) Latch/striker failure due to damage
(3) Hinge failure due to damage
(4) Door structure failure due to damage
(5) Door support (i.e., pillar, sill, roof side rail, etc.) failure due to damage
(6) Latch/striker and hinge failure due to damage
(8) Other failure (specify): _____
(9) Unknown

GLAZING

Glazing Damage from Impact Forces not broken

15. WS 2 16. LF 6 17. RF 0 18. LR 8 19. RR 8

20. BL ~~4~~ 6 21. Roof 8 22. Other 8

NASS CODING CHANGE
1st Review: 1A
2nd Review: _____

(0) No glazing damage from impact forces
(2) Glazing in place and cracked from impact forces
(3) Glazing in place and holed from impact forces
(4) Glazing out-of-place (cracked or not) and not holed from impact forces
(5) Glazing out-of-place and holed from impact forces
(6) Glazing disintegrated from impact forces
(7) Glazing removed prior to accident
(8) No glazing
(9) Unknown if damaged

Glazing Damage from Occupant Contact

23. WS 0 24. LF 0 25. RF 0 26. LR 0 27. RR 0

28. BL 0 29. Roof 0 30. Other 0

(0) No occupant contact to glazing or no glazing
(1) Glazing contacted by occupant but no glazing damage
(2) Glazing in place and cracked by occupant contact
(3) Glazing in place and holed by occupant contact
(4) Glazing out-of-place (cracked or not) by occupant contact and not holed by occupant contact
(5) Glazing out-of-place by occupant contact and holed by occupant contact
(6) Glazing disintegrated by occupant contact
(9) Unknown if contacted by occupant

If No Glazing Damage *And* No Occupant Contact or No Glazing, Then Code IV31 Through IV46 As Ø

Type of Window/Windshield Glazing

31. WS 1 32. LF 2 33. RF 0 34. LR 0 35. RR 0

36. BL 2 37. Roof 0 38. Other 0

(0) No glazing contact and no damage, or no glazing
(1) AS-1 — Laminated
(2) AS-2 — Tempered
(3) AS-3 — Tempered-tinted
(4) AS-14 — Glass/Plastic
(8) Other (specify): _____
(9) Unknown

Window Precrash Glazing Status

39. WS 1 40. LF 2 41. RF 0 42. LR 0 43. RR 0

44. BL 1 45. Roof 0 46. Other 0

(0) No glazing contact and no damage, or no glazing
(1) Fixed
(2) Closed
(3) Partially opened
(4) Fully opened
(9) Unknown

INTRUSION WORKSHEET

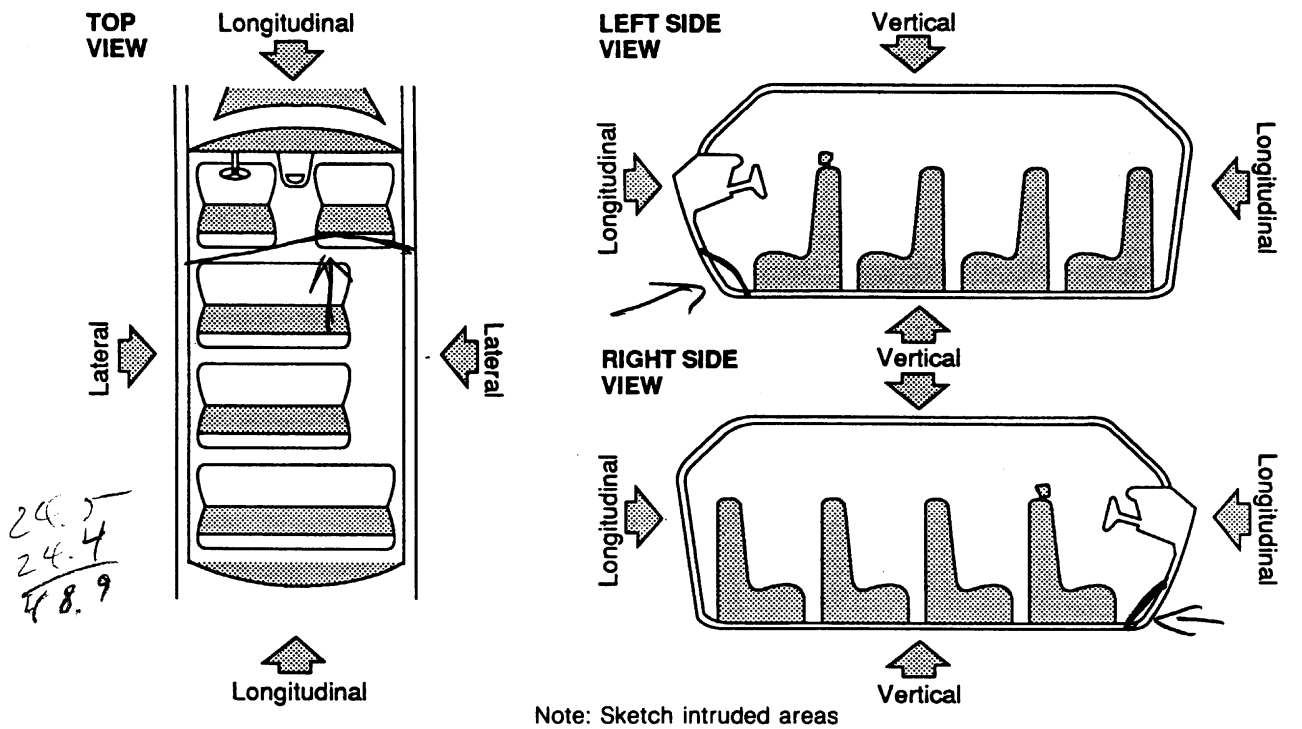

24.5
24.4
48.9

Note: Sketch intruded areas

	LOCATION OF INTRUSION	INTRUDED COMPONENT	COMPARISON VALUE	–	INTRUDED VALUE	=	INTRUSION	DOMINANT CRUSH DIRECTION
	~~11~~	~~A Pillar~~	~~29.5~~	–	~~29.0~~ to (F) of seat belt retractor	=	~~.5~~	~~Long~~
(10)	13	"	52.5	–	51.0 to opp side	=	1.5 (10)	Lat
(3)	11	Inst. Panel	40.7	–	27.0 mid Toe Pan to (F) of belt retractor	=	13.7 (3)	Long
(2)	12	"	132.7	–	115.2 to (L) side of glove comp.	=	17.5 (2)	measured error well overstated
(1)	13	"	131.8	–	111.0 to Inside of Tailgate	=	20.8 (1)	"
(7)	Rear Area 98	Rear Panel	6.0	–	2.1 to (F) of Bottom Deck	=	3.9 (7)	Long
	~~98~~		~~6.0~~	–	~~4.9~~ "	=	~~1.1~~	~~"~~
	~~98~~		~~6.0~~	–	~~5.0~~ "	=	~~1.0~~	~~"~~
(9)	11	Toe Pan	36.7	–	34.7 to (F) of seat belt retractor	=	2.0 (9)	"
(5)	12		11.2	–	4.8 to (F) of shifter	=	6.4 (5)	"
(4)	13		11.8	–	2.4 "	=	9.4 (4)	Long
(6)	11	Sill	52.8	–	48.9 to opp side	=	3.9 (6)	Lat
(8)	11	Kick Panel	52.0	–	48.6 to opp side	=	3.4 (8)	"
				–		=		
				–		=		

Document no more than the 15 most severe intrusions

33.0
78.0
111.0

OCCUPANT AREA INTRUSION

Note: If no intrusions, leave variables IV47-IV86 blank.

	Location of Intrusion	Intruding Component	Magnitude of Intrusion	Dominant Crush Direction
4th ~~1st~~	47. 1 3	48. 0 4	49. ~~5~~ 2	50. 2
5th ~~2nd~~	51. 1 2	52. 0 3	53. ~~4~~ 2	54. 2
6th ~~3rd~~	55. 1 1	56. 0 2	57. ~~1~~ 2	58. 2
1st ~~4th~~	59. 1 3	60. 0 5	61. 3	62. 2
2nd ~~5th~~	63. 1 2	64. 0 5	65. 3	66. 2
7th ~~6th~~	67. 1 1	68. 1 7	69. 2	70. 3
3rd ~~7th~~	71. 9 8	72. 2 5	73. 2	74. 2
8th	75. 1 1	76. 2 7	77. 2	78. 3
9th	79. 1 1	80. 0 5	81. 1	82. 2
10th	83. 1 3	84. 0 6	85. 1	86. 3

INTRUDING COMPONENT

Interior Components

(01) Steering assembly
(02) Instrument panel left ✓
(03) Instrument panel center ✓
(04) Instrument panel right ✓
(05) Toe pan ✓
(06) A-pillar ✓
(07) B-pillar
(08) C-pillar
(09) D-pillar
(10) Door panel (side)
(12) Roof (or convertible top)
(13) Roof side rail
(14) Windshield
(15) Windshield header
(16) Window frame
(17) Floor pan (includes sill) ✓
(18) Backlight header
(19) Front seat back
(20) Second seat back
(21) Third seat back
(22) Fourth seat back
(23) Fifth seat back
(24) Seat cushion
(25) Back door/panel (e.g., tailgate) ✓
(26) Other interior component (specify): _____
(27) Side panel - forward of the A-pillar ✓
(28) Side panel - rear of the A-pillar

Exterior Components

(30) Hood
(31) Outside surface of this vehicle (specify): _____
(32) Other exterior object in the environment (specify): _____
(33) Unknown exterior object
(97) Catastrophic
(98) Intrusion of unlisted component(s) (specify): _____
(99) Unknown

LOCATION OF INTRUSION

Front Seat
(11) Left
(12) Middle
(13) Right

Second Seat
(21) Left
(22) Middle
(23) Right

Third Seat
(31) Left
(32) Middle
(33) Right

Fourth Seat
(41) Left
(42) Middle
(43) Right

(97) Catastrophic
(98) Other enclosed area (specify) AREA BEHIND SEAT
(99) Unknown

MAGNITUDE OF INTRUSION

(1) ≥ 1 inch but < 3 inches
(2) ≥ 3 inches but < 6 inches
(3) ≥ 6 inches but < 12 inches
(4) ≥ 12 inches but < 18 inches
(5) ≥ 18 inches but < 24 inches
(6) ≥ 24 inches
(7) Catastrophic
(9) Unknown

DOMINANT CRUSH DIRECTION

(1) Vertical
(2) Longitudinal
(3) Lateral
(7) Catastrophic
(9) Unknown

Intrusions 7, 8, and 10 cannot be verified due to poor photos
Measurments for 4, 5, and 6 were significantly overstated by Reseorcher

STEERING RIM/SPOKE DEFORMATION

COMPARISON VALUE	—	DAMAGE VALUE	=	DEFORMATION
-1.0	—	1.9	=	2.9
	—		=	
	—		=	
	—		=	

STEERING COLUMN

87. Steering Column Type 1
(1) Fixed column
(2) Tilt column
(3) Telescoping column
(4) Tilt and telescoping column
(8) Other column type (specify): _____
(9) Unknown

88. Blank X X
(This variable is left blank so that numbering consistency can be maintained with the 1988-91 CDS.

89. Blank X X X
(This variable is left blank so that numbering consistency can be maintained with the 1988-91 CDS.

90. Blank X X X
(This variable is left blank so that numbering consistency can be maintained with the 1988-91 CDS.

91. Blank X X X
(This variable is left blank so that numbering consistency can be maintained with the 1988-91 CDS.

92. Steering Rim/Spoke Deformation 3
2.9 Code actual measured deformation to the nearest inch.
(0) No steering rim deformation
(1-5) Actual measured value
(6) 6 inches or more
(8) Observed deformation cannot be measured
(9) Unknown

93. Location of Steering Rim/Spoke Deformation 0 7
(00) No steering rim deformation

Quarter Sections
(01) Section A
(02) Section B
(03) Section C
(04) Section D

Half Sections
(05) Upper half of rim/spoke
(06) Lower half of rim/spoke
(07) Left half of rim/spoke
(08) Right half of rim/spoke

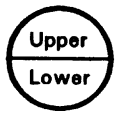

(09) Complete steering wheel collapse
(10) Undetermined location
(99) Unknown

INSTRUMENT PANEL

94. Odometer Reading 0 0 5 ,000
004818 miles—Code mileage to the nearest 1,000 miles
(000) No odometer
(001) Less than 1,500 miles
(300) 299,500 miles or more
(999) Unknown

Source: [redacted]

95. Instrument Panel Damage from Occupant Contact? 1
(0) No
(1) Yes
(9) Unknown

96. Knee Bolsters Deformed from Occupant Contact? 8
(0) No
(1) Yes
(8) Not present
(9) Unknown

97. Did Glove Compartment Door Open During Collision(s)? 0
(0) No
(1) Yes
(8) Not present
(9) Unknown

VEHICLE INTERIOR SKETCHES

Note area of ejection/entrapment

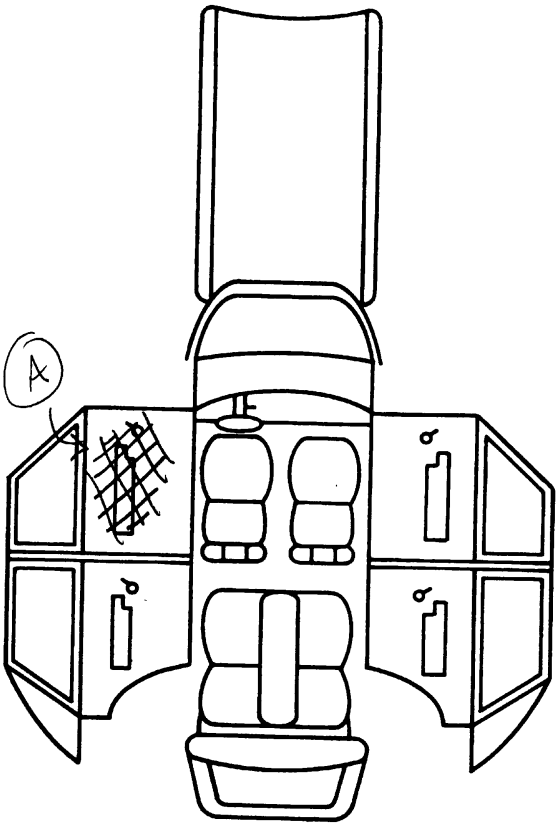

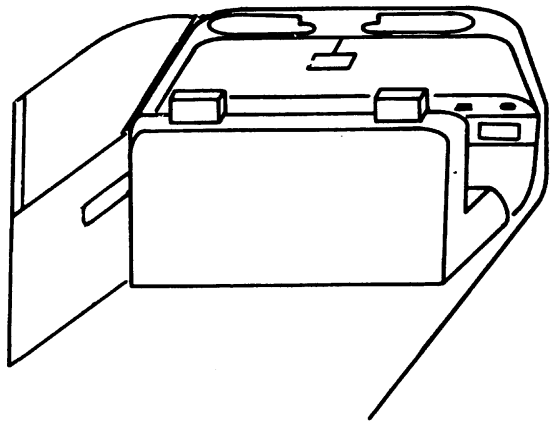

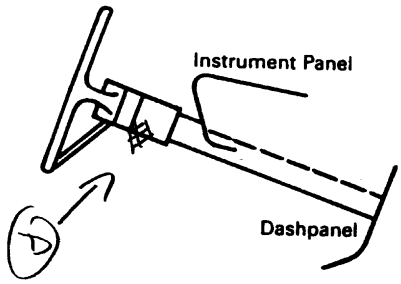

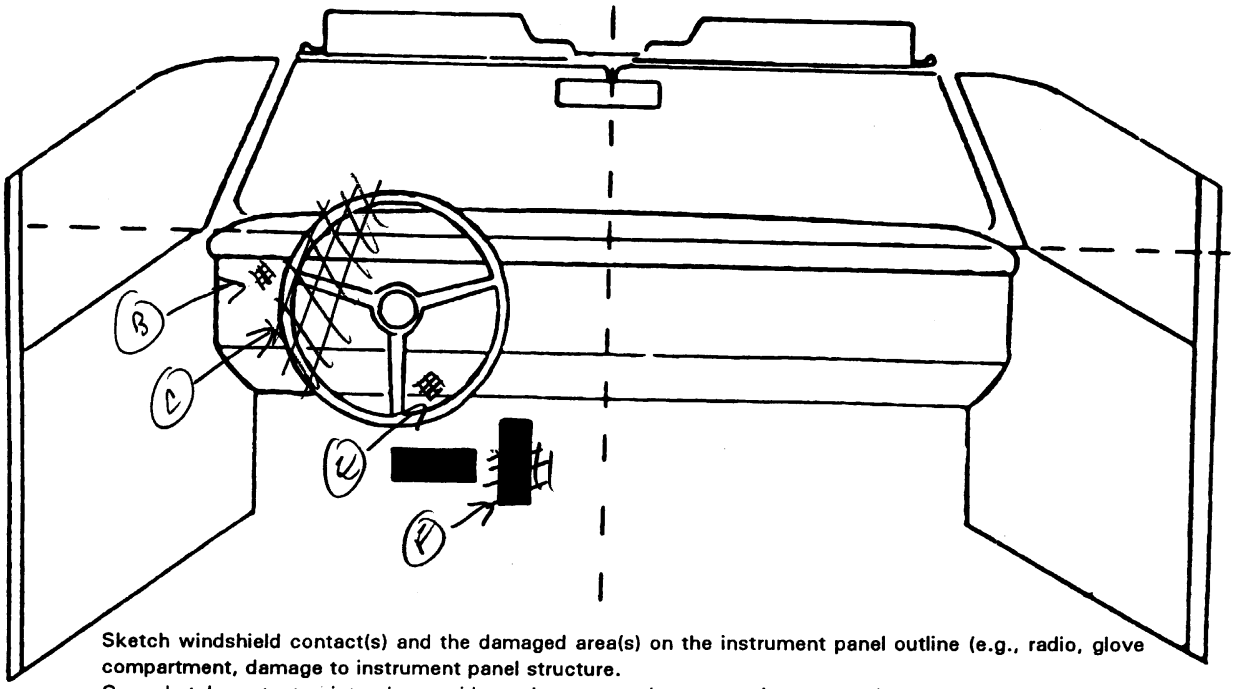

Sketch windshield contact(s) and the damaged area(s) on the instrument panel outline (e.g., radio, glove compartment, damage to instrument panel structure.
Cross hatch contact points, draw spider webs or use other annotation as may be appropriate.
Annotate the contacted area with a letter (begin with A) and list on the Points of Occupant Contact page.

POINTS OF OCCUPANT CONTACT

Contact	Interior Component Contacted	Occupant No. If Known	Body Region If Known	Supporting Physical Evidence	Confidence Level of Contact Point
A	21	1	(L) side	Deformation	1
B	09	1	(L) head	Switch broken off	1
C	04	1	(L) arm	Deformed	1
D	07	1	either leg	Smudge mark	3
E	09	1	" "	" "	3
F	56/59	1	(R) leg	Intrusion	2
G					
H					
I					
J					
K					
L					
M					
N					

CODES FOR INTERIOR COMPONENTS

FRONT
- (01) Windshield
- (02) Mirror
- (03) Sunvisor
- (04) Steering wheel rim
- (05) Steering wheel hub/spoke
- (06) Steering wheel (combination of codes 04 and 05)
- (07) Steering column, transmission selector lever, other attachment
- (08) Add on equipment (e.g., CB, tape deck, air conditioner)
- (09) Left instrument panel and below
- (10) Center instrument panel and below
- (11) Right instrument panel and below
- (12) Glove compartment door
- (13) Knee bolster
- (14) Windshield including one or more of the following: front header, A-pillar, instrument panel, mirror, or steering assembly (driver side only)
- (15) Windshield including one or more of the following: front header, A-pillar, instrument panel, or mirror (passenger side only)
- (16) Other front object (specify): _____

LEFT SIDE
- (20) Left side interior surface, excluding hardware or armrests
- (21) Left side hardware or armrest
- (22) Left A pillar
- (23) Left B pillar
- (24) Other left pillar (specify): _____
- (25) Left side window glass or frame
- (26) Left side window glass including one or more of the following: frame, window sill, A pillar, B pillar, or roof side rail.
- (27) Other left side object (specify): _____
- (28) Left side window sill

RIGHT SIDE
- (30) Right side interior surface, excluding hardware or armrests
- (31) Right side hardware or armrest
- (32) Right A pillar
- (33) Right B pillar
- (34) Other right pillar (specify): _____
- (35) Right side window glass or frame
- (36) Right side window glass including one or more of the following: frame, window sill, A pillar, B pillar, or roof side rail.
- (37) Other right side object (specify): _____
- (38) Right side window sill

INTERIOR
- (40) Seat, back support
- (41) Belt restraint webbing/buckle
- (42) Belt restraint B-pillar attachment point
- (43) Other restraint system component (specify): _____
- (44) Head restraint system
- (45) Air bag
- (46) Other occupants (specify): _____
- (47) Interior loose objects
- (48) Child safety seat (specify): _____
- (49) Other interior object (specify): _____

ROOF
- (50) Front header
- (51) Rear header
- (52) Roof left side rail
- (53) Roof right side rail
- (54) Roof or convertible top

FLOOR
- (56) Floor (including toe pan)
- (57) Floor or console mounted transmission lever, including console
- (58) Parking brake handle
- (59) Foot controls including parking brake

REAR
- (60) Backlight (rear window)
- (61) Backlight storage rack, door, etc.
- (62) Other rear object (specify): _____

CONFIDENCE LEVEL OF CONTACT POINT
- (1) Certain
- (2) Probable
- (3) Possible
- (9) Unknown

AUTOMATIC RESTRAINTS

NOTES: Encode the data for each applicable front seat position. The attribute for the variables may be found below. Restraint systems should be assessed during the vehicle inspection then coded on the Occupant Assessment Form.

AIR BAGS

		Left	Right
FIRST	Availability/Function		
	Deployment		
	Failure		

Air Bag System Availability/Function
(0) Not equipped/not available
(1) Air bag

Non-functional
(2) Air bag disconnected (specify): _____
(3) Air bag not reinstalled
(9) Unknown

Air Bag System Deployment
(0) Not equipped/not available
(1) Air bag deployed during accident (as a result of impact)
(2) Air bag deployed inadvertently just prior to accident
(3) Air bag deployed, accident sequence undetermined
(4) Nondeployed
(5) Unknown if deployed
(6) Air bag deployed as a result of a noncollision event during accident sequence (e.g., fire, explosion, electrical)
(9) Unknown

Did Air Bag System Fail?
(0) Not equipped/not available
(1) No
(2) Yes (specify): _____
(9) Unknown

AUTOMATIC BELTS

		Left	Right
FIRST	Availability/Function		
	Use		
	Type		
	Proper Use		
	Failure Modes		

Automatic (Passive) Belt System Availability/Function
(0) Not equipped/not available
(1) 2 point automatic belts
(2) 3 point automatic belts
(3) Automatic belts - type unknown

Non-functional
(4) Automatic belts destroyed or rendered inoperative
(9) Unknown

Automatic (Passive) Belt System Use
(0) Not equipped/not available/destroyed or rendered inoperative
(1) Automatic belt in use
(2) Automatic belt not in use (manually disconnected, motorized track inoperative)
(3) Automatic belt use unknown
(9) Unknown

Automatic (Passive) Belt System Type
(0) Not equipped/not available
(1) Non-motorized system
(2) Motorized system
(9) Unknown

Proper Use of Automatic (Passive) Belt System
(0) Not equipped/not available/not used
(1) Automatic belt used properly
(2) Automatic belt used properly with child safety seat

Automatic Belt Used Improperly
(3) Automatic shoulder belt worn under arm
(4) Automatic shoulder belt worn behind back
(5) Automatic belt worn around more than one person
(6) Lap portion of automatic belt worn on abdomen
(7) Automatic lap and shoulder belt or automatic shoulder belt used improperly with child safety seat (specify): _____
(8) Other improper use of automatic belt system (specify): _____
(9) Unknown

Automatic (Passive) Belt Failure Modes During Accident
(0) Not equipped/not available/not in use
(1) No automatic belt failure(s)
(2) Torn webbing (stretched webbing not included)
(3) Broken buckle or latchplate
(4) Upper anchorage separated
(5) Other anchorage separated (specify): _____
(6) Broken retractor
(7) Combination of above (specify):
(8) Other automatic belt failure (specify): _____
(9) Unknown

MANUAL RESTRAINTS

NOTES: Encode the applicable data for each seat position in the vehicle. The attribute for the variable may be found below. Restraint systems should be assessed during the vehicle inspection then coded on the Ocupant Assessment Form.

If a Child safety seat is present, encode the data on the back of this page.

If the vehicle has automatic restraints available, encode the appropriate data on the back of the previous page.

		Left	Center	Right
FIRST	Availability	4	3	4
	Use	00	00	00
	Failure Modes	0	0	0
SECOND	Availability			
	Use			
	Failure Modes			
THIRD	Availability			
	Use			
	Failure Modes			
OTHER	Availability			
	Use			
	Failure Modes			

Manual (Active) Belt System Availability

(0) None available
(1) Belt removed/destroyed
(2) Shoulder belt
(3) Lap belt
(4) Lap and shoulder belt
(5) Belt available - type unknown

Integral Belt Partially Destroyed

(6) Shoulder belt (lap belt destroyed/removed)
(7) Lap belt (shoulder belt destroyed/removed)
(8) Other belt (specify): _____
(9) Unknown

Manual (Active) Belt System Use

(00) None used, not available, or belt removed/destroyed
(01) Inoperable (specify): _____
(02) Shoulder belt
(03) Lap belt
(04) Lap and shoulder belt
(05) Belt used - type unknown
(08) Other belt used (specify): _____
(12) Shoulder belt used with child safety seat
(13) Lap belt used with child safety seat
(14) Lap and shoulder belt used with child safety seat
(15) Belt used with child safety seat - type unknown
(18) Other belt used with child safety seat (specify): _____
(99) Unknown if belt used

Manual (Active) Belt Failure Modes During Accident

(0) No manual belt used or not available
(1) No manual belt failure(s)
(2) Torn webbing (stretched webbing not included)
(3) Broken buckle or latchplate
(4) Upper anchorage separated
(5) Other anchorage separated (specify): _____
(6) Broken retractor
(7) Combination of above (specify): _____
(8) Other manual belt failure (specify): _____
(9) Unknown

CHILD SAFETY SEAT FIELD ASSESSMENT

When a child safety seat is present enter the occupant's number in the first row and complete the column below the occupant's number using the codes listed below. Complete a column for each child safety seat present.

Occupant Number						
1. Type of Child Safety Seat						
2. Child Safety Seat Orientation						
3. Child Safety Seat Harness Usage						
4. Child Safety Seat Shield Uasge						
5. Child Safety Seat Tether Usage						
6. Child Safety Seat Make/Model	Specify Below for Each Child Safety Seat					

1. Type of Child Safety Seat

   (0) No child safety seat
   (1) Infant seat
   (2) Toddler seat
   (3) Convertible seat
   (4) Booster seat
   (7) Other type child safety seat (specify): _____
   (8) Unknown child safety seat type
   (9) Unknown if child safety seat used

2. Child Safety Seat Orientation

   (00) No child safety seat

   Designed for Rear Facing for This Age/Weight
   (01) Rear facing
   (02) Forward facing
   (08) Other orientation (specify): _____
   (09) Unknown orientation

   Designed for Forward Facing for This Age/Weight
   (11) Rear facing
   (12) Forward facing
   (18) Other orientation (specify): _____
   (19) Unknown orientation

   Unknown Design or Orientation For This Age/Weight, or Unknown Age/Weight
   (21) Rear facing
   (22) Forward facing
   (28) Other orientation (specify): _____
   (29) Unknown orientation

   (99) Unknown if child safety seat used

3. Child Safety Seat Harness Usage

4. Child Safety Seat Shield Usage

5. Child Safety Seat Tether Usage
   Note: Options Below Are Used for Variables 3-5.

   (00) No child safety seat

   Not Designed with Harness/Shield/Tether
   (01) After market harness/shield/tether added, not used
   (02) After market harness/shield/tether used
   (03) Child safety seat used, but no after market harness/shield/tether added
   (09) Unknown if harness/shield/tether added or used

   Designed With Harness/Shield/Tether
   (11) Harness/shield/tether not used
   (12) Harness/shield/tether used
   (19) Unknown if harness/shield/tether used

   Unknown If Designed With Harness/Shield/Tether
   (21) Harness/shield/tether not used
   (22) Harness/shield/tether used
   (29) Unknown if harness/shield/tether used

   (99) Unknown if child safety seat used

6. Child Safety Seat Make/Model
   (Specify make/model and occupant number)

   _____
   _____
   _____
   _____

HEAD RESTRAINTS/SEAT EVALUATION

NOTES: Encode the applicable data for each seat position in the vehicle. The attribute for these variables may be found at the bottom of the page. Head restraint type/damage and seat type/performance should be assessed during the vehicle inspection then coded on the Occupant Assessment Form.

		Left	Center	Right
FIRST	Head Restraint Type/Damage	3	0	3
	Seat Type	05	05	05
	Seat Performance	1	1	1
	Seat Orientation	1	1	1
SECOND	Head Restraint Type/Damage			
	Seat Type			
	Seat Performance			
	Seat Orientation			
THIRD	Head Restraint Type/Damage			
	Seat Type			
	Seat Performance			
	Seat Orientation			
OTHER	Head Restraint Type/Damage			
	Seat Type			
	Seat Performance			
	Seat Orientation			

Head Restraint Type/Damage by Occupant at This Occupant Position

(0) No head restraints
(1) Integral — no damage
(2) Integral — damaged during accident
(3) Adjustable — no damage
(4) Adjustable — damaged during accident
(5) Add-on — no damage
(6) Add-on — damaged during accident
(8) Other Specify): _____
(9) Unknown

Seat Type (this Occupant Position)

(00) No seat
(01) Bucket
(02) Bucket with folding back
(03) Bench
(04) Bench with separate back cushions
(05) Bench with folding back(s)
(06) Split bench with separate back cushions
(07) Split bench with folding back(s)
(08) Pedestal (i.e., column supported)
(09) Other seat type (specify): _____
(10) Box mounted seat (i.e., van type)
(99) Unknown

Seat Performance (this Occupant Position)

(0) No seat
(1) No seat performance failure(s)
(2) Seat adjusters failed
(3) Seat back folding locks or "seat back" failed specify: _____
(4) Seat tracks/anchors failed
(5) Deformed by impact of occupant
(6) Deformed by passenger compartment intrusion (specify): _____
(7) Combination of above (specify): _____
(8) Other (specify): _____
(9) Unknown

Seat Orientation (this Occupant Position)

(0) No seat
(1) Forward facing seat
(2) Rear facing seat
(3) Side facing seat (inward)
(4) Side facing seat (outward)
(8) Other (specify): _____
(9) Unknown

DESCRIBE ANY INDICATION OF ABNORMAL OCCUPANT POSTURE (I.E., UNUSUAL OCCUPANT CONTACT PATTERN)

None

EJECTION/ENTRAPMENT DATA

Complete the following if the researcher has any indication that an occupant was either ejected from or entrapped in the vehicle. Code the appropriate data on the Occpant Assessment Form.

EJECTION No [X] Yes [ ]

Describe indications of ejection and body parts involved in partial ejection(s):

Occupant Number						
Ejection						
(Note on Vehicle Interior Sketch) Ejection Area						
Ejection Medium						
Medium Status						

NONE

Ejection
- (1) Complete ejection
- (1) Partial ejection
- (3) Ejection, Unknown degree
- (9) Unknown

Ejection Area
- (1) Windshield
- (2) Left front
- (3) Right front
- (4) Left rear
- (5) Right rear
- (6) Rear
- (7) Roof
- (8) Other area (e.g., back of pickup, etc.) (specify): _____
- (9) Unknown

Ejection Medium
- (1) Door/hatch/tailgate
- (2) Nonfixed roof structure
- (3) Fixed glazing
- (4) Nonfixed glazing (specify): _____
- (5) Integral structure
- (8) Other medium (specify): _____
- (9) Unknown

Medium Status (Immediately Prior to Impact)
- (1) Open
- (2) Closed
- (3) Integral structure
- (9) Unknown

ENTRAPMENT No [X] Yes [ ]

Describe entrapment mechanism: _____

NONE

Component(s): _____

(Note in vehicle interior diagram)

09-504A

26. Seat Type (this Occupant Position) 0 5
(00) Occupant not seated or no seat
(01) Bucket
(02) Bucket with folding back
(03) Bench
(04) Bench with separate back cushions
(05) Bench with folding back(s)
(06) Split bench with separate back cushions
(07) Split bench with folding back(s)
(08) Pedestal (i.e., column supported)
(09) Other seat type (specify): _____
(10) Box mounted seat (i.e., van type)
(99) Unknown

27. Seat Performance (this Occupant Position) 1
(0) Occupant not seated or no seat
(1) No seat performance failure(s)
(2) Seat adjusters failed
(3) Seat back folding locks or "seat back" failed
(4) Seat track/anchors failed
(5) Deformed by impact of occupant
(6) Deformed by passenger compartment intrusion (specify): _____
(7) Combination of above (specify): _____
(8) Other (specify): _____
(9) Unknown

CHILD SAFETY SEAT

28. Child Safety Seat Make/Model 0 0 0
(000) No child safety seat
Applicable codes are found in your NASS CDS Data Collection, Coding and Editing
(950) Built-in child safety seat
(997) Other make/model (specify): _____
(998) Unknown make/model
(999) Unknown if child safety seat used

29. Type of Child Safety Seat 0
(0) No child safety seat
(1) Infant seat
(2) Toddler seat
(3) Convertible seat
(4) Booster seat
(7) Other type child safety seat (specify): _____
(8) Unknown child safety seat type
(9) Unknown if child safety seat used

30. Child Safety Seat Orientation 0 0
(00) No child safety seat

Designed for Rear Facing for This Age/Weight
(01) Rear facing
(02) Forward facing
(08) Other orientation (specify): _____
(09) Unknown orientation

Designed For Forward Facing for This Age/Weight
(11) Rear facing
(12) Forward facing
(18) Other orientation (specify): _____
(19) Unknown orientation

Unknown Design or Orientation For This Age/Weight, or Unknown Age/Weight
(21) Rear facing
(22) Forward facing
(28) Other orientation (specify): _____
(29) Unknown orientation

(99) Unknown if child safety seat used

31. Child Safety Seat Harness Usage 0 0

32. Child Safety Seat Shield Usage 0 0

33. Child Safety Seat Tether Usage 0 0
Note: Options below applicable to Variables OA31-OA33.
(00) No child safety seat

Not Designed With Harness/Shield/Tether
(01) After market harness/shield/tether added, not used
(02) After market harness/shield/tether used
(03) Child safety seat used, but no after market harness/shield/tether added
(09) Unknown if harness/shield/tether added or used

Designed With Harness/Shield/Tether
(11) Harness/shield/tether not used
(12) Harness/shield/tether used
(19) Unknown if harness/shield/tether used

Unknown If Designed With Harness/Shield/Tether
(21) Harness/shield/tether not used
(22) Harness/shield/tether used
(29) Unknown if harness/shield/tether used

(99) Unknown if child safety seat used

U.S. Department of Transportation

National Highway Traffic Safety Administration

OCCUPANT INJURY FORM

Form Approved
O.M.B. No. 2127-0021

NATIONAL ACCIDENT SAMPLING SYSTEM
CRASHWORTHINESS DATA SYSTEM

1. Primary Sampling Unit Number	09	3. Vehicle Number	02
2. Case Number - Stratum	504A	4. Occupant Number	01

INJURY DATA

Record below the actual injuries sustained by this occupant that were identified from the official and unofficial data sources. Remember not to double count an injury just because it was identified from two different sources. If greater than ten injuries have been documented, encode the balance on the Occupant Injury Supplement.

	Source of Injury Data	O.I.C.-A.I.S Body Region	Aspect	Lesion	System Organ	A.I.S. Severity	Injury Source	Injury Source Confidence Level	Direct/ Indirect Injury	Occupant Area Intrusion No.
1st	5. 7	6. Q	7. R	8. F	9. S	10. 2	11. 59	12. 1	13. 1	14. 00
~~2nd~~	~~15. 7~~	~~16. Q~~	~~17. R~~	~~18. F~~	~~19. S~~	~~20. 2~~	~~21. 59~~	~~22. 1~~	~~23. 1~~	~~24. 00~~
~~3rd~~	~~25. 7~~	~~26. Q~~	~~27. R~~	~~28. F~~	~~29. S~~	~~30. 2~~	~~31. 59~~	~~32. 1~~	~~33. 1~~	~~34. 00~~
~~4th~~	~~35. 7~~	~~36. Q~~	~~37. R~~	~~38. F~~	~~39. S~~	~~40. 2~~	~~41. 59~~	~~42. 1~~	~~43. 1~~	~~44. 00~~
5th	45. 7	46. W	47. L	48. L	49. I	50. 1	51. 09	52. 2	53. 1	54. ~~03~~ 06
6th	55. 7	56. C	57. C	58. C	59. I	60. 1	61. 41	62. 1	63. 1	64. 00
7th	65. 7	66. S	67. L	68. C	69. I	70. 1	71. 41	72. 1	73. 1	74. 00
8th	75. 7	76. F	77. I	78. L	79. I	80. 1	81. ~~97~~ 04	82. ~~1~~ 2	83. ~~1~~ 1	84. ~~99~~ 00
9th	85.	86.	87.	88.	89.	90.	91.	92.	93.	94.
10th	95.	96.	97.	98.	99.	100.	101.	102.	103.	104.

HS Form 433B (1/92)

This report is authorized by P.L. 89-563, Title 1, Section 106, 108, and 112. While you are not required to respond, your cooperation is needed to make the results of this data collection effort comprehensive, accurate, and timely.

OCCUPANT INJURY DATA

	Source of Injury Data	O.I.C.-A.I.S					Injury Source	Injury Source Confidence Level	Direct/ Indirect Injury	Occupant Area Intrusion No.
		Body Region	Aspect	Lesion	System Organ	A.I.S. Severity				
11th	—	—	—	—	—	—	— —	—	—	— —
12th	—	—	—	—	—	—	— —	—	—	— —
13th	—	—	—	—	—	—	— —	—	—	— —
14th	—	—	—	—	—	—	— —	—	—	— —
15th	—	—	—	—	—	—	— —	—	—	— —
16th	—	—	—	—	—	—	— —	—	—	— —
17th	—	—	—	—	—	—	— —	—	—	— —
18th	—	—	—	—	—	—	— —	—	—	— —
19th	—	—	—	—	—	—	— —	—	—	— —
20th	—	—	—	—	—	—	— —	—	—	— —
21st	—	—	—	—	—	—	— —	—	—	— —
22nd	—	—	—	—	—	—	— —	—	—	— —
23rd	—	—	—	—	—	—	— —	—	—	— —
24th	—	—	—	—	—	—	— —	—	—	— —
25th	—	—	—	—	—	—	— —	—	—	— —

09-564A
V2 01

OFFICIAL INJURY DATA — SOFT TISSUE INJURIES

Indicate the Location, Lesion, Detail (size, depth, fracture type, head injury clinical signs and neurological deficits), and Source of all injuries indicated by official sources (or from PAR or other unofficial sources if medical records and interviewee data are unavailable.)

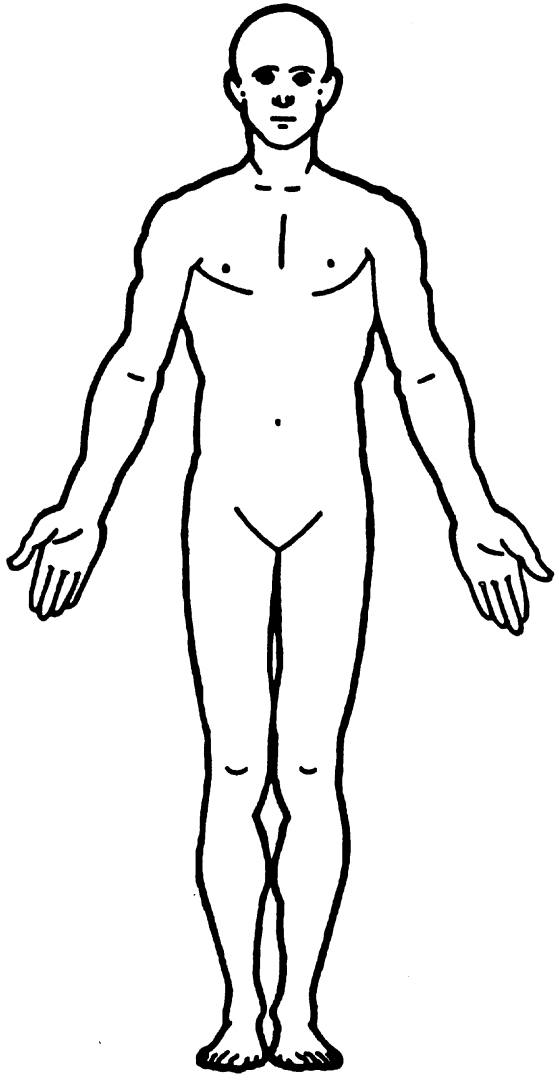

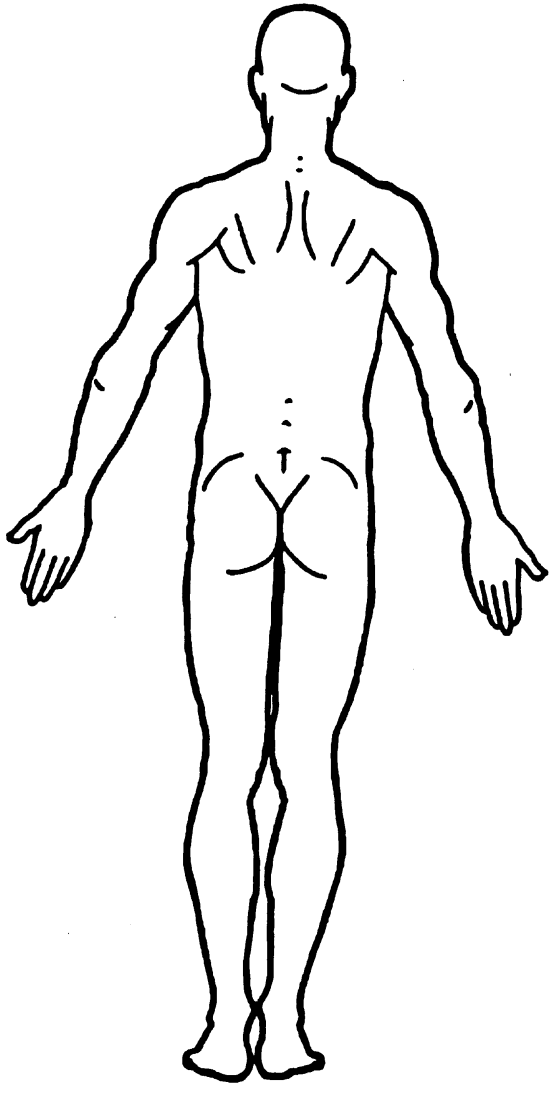

SOURCE OF INJURY DATA

OFFICIAL

(1) Autopsy records with or without hospital medical records
(2) Hospital medical records other than emergency room (e.g., dishcarge summary)
(3) Emergency room records only (including associated X-rays or other lab reports)
(4) Private physician, walk-in or emergency clinic

UNOFFICIAL

(5) Lay coroner report
(6) E.M.S. personnel
(7) Interviewee
(8) Other source (specify): _____
(9) Police

INJURY SOURCE

FRONT

(01) Windshield
(02) Mirror
(03) Sunvisor
(04) Steering wheel rim
(05) Steering wheel hub/spoke
(06) Steering wheel (combination of codes 04 and 05)
(07) Steering column, transmission selector lever, other attachment
(08) Add on equipment (e.g., CB, tape deck, air conditioner)
(09) Left instrument panel and below
(10) Center instrument panel and below
(11) Right instrument panel and below
(12) Glove compartment door
(13) Knee bolster
(14) Windshield including one or more of the following: front header, A-pillar, instrument panel, mirror, or steering assembly (driver side only)
(15) Windshield including one or more of the following: front header, A-pillar, instrument panel, or mirror (passenger side only)
(16) Other front object (specify): _____

LEFT SIDE

(20) Left side interior surface, excluding hardware or armrests
(21) Left side hardware or armrest
(22) Left A pillar
(23) Left B pillar
(24) Other left pillar (specify): _____
(25) Left side window glass or frame
(26) Left side window glass including one or more of the following: frame, window sill, A-pillar, B-pillar, or roof side rail.
(27) Other left side object (specify): _____
(28) Left side window sill

RIGHT SIDE

(30) Right side interior surface, excluding hardware or armrests
(31) Right side hardware or armrest
(32) Right A pillar
(33) Right B pillar
(34) Other right pillar (specify): _____
(35) Right side window glass or frame
(36) Right side window glass including one or more of the following: frame, window sill, A pillar, B pillar, or roof side rail.
(37) Other right side object (specify): _____
(38) Right side window sill

INTERIOR

(40) Seat, back support
(41) Belt restraint webbing/buckle
(42) Belt restraint B-pillar attachment point
(43) Other restraint system component (specify): _____
(44) Head restraint system
(45) Air bag
(46) Other occupants (specify): _____
(47) Interior loose objects
(48) Child safety seat (specify): _____
(49) Other interior object (specify): _____

ROOF

(50) Front header
(51) Rear header
(52) Roof left side rail
(53) Roof right side rail
(54) Roof or convertible top

FLOOR

(56) Floor (including toe pan)
(57) Floor or console mounted transmission lever, including console
(58) Parking brake handle
(59) Foot controls including parking brake

REAR

(60) Backlight (rear window)
(61) Backlight storage rack, door, etc.
(62) Other rear object (specify): _____

EXTERIOR of OCCUPANT'S VEHICLE

(65) Hood
(66) Outside hardware (e.g., outside mirror, antenna)
(67) Other exterior surface or tires (specify): _____
(68) Unknown exterior objects

EXTERIOR OF OTHER MOTOR VEHICLE

(70) Front bumper
(71) Hood edge
(72) Other front of vehicle (specify): _____
(73) Hood
(74) Hood ornament
(75) Windshield, roof rail, A-pillar
(76) Side surface
(77) Side mirrors
(78) Other side protrusions (specify) _____
(79) Rear surface
(80) Undercarriage
(81) Tires and wheels
(82) Other exterior of other motor vehicle (specify): _____
(83) Unknown exterior of other motor vehicle

OTHER VEHICLE OR OBJECT IN THE ENVIRONMENT

(84) Ground
(85) Other vehicle or object (specify) _____
(86) Unknown vehicle or object

NONCONTACT INJURY

(90) Fire in vehicle
(91) Flying glass
(92) Other noncontact injury source (specify): _____
(93) Air bag exhaust gases
(97) Injured, unknown source

INJURY SOURCE CONFIDENCE LEVEL

(1) Certain
(2) Probable
(3) Possible
(9) Unknown

DIRECT/INDIRECT INJURY

(1) Direct contact injury
(2) Indirect contact injury
(3) Noncontact injury
(7) Injured, unknown source

OCCUPANT INJURY CLASSIFICATION

O.I.C. Body Region

(M) Abdomen
(Q) Ankle—foot
(A) Arm (upper)
(B) Back-thoracolumbar spine
(C) Chest
(E) Elbow
(F) Face
(R) Forearm
(H) Head—skull
(U) Injured, unknown region
(K) Knee
(L) Leg (lower)
(Y) Lower limbs(s) (whole or unknown part)
(N) Neck—cervical spine
(P) Pelvic—hip
(S) Shoulder
(T) Thigh
(X) Upper limb(s) (whole or unknown part)
(O) Whole body
(W) Wrist—hand

Aspect of Injury

(A) Anterior—front
(B) Bilateral (rib fracture only)
(C) Central
(I) Inferior—lower
(U) Injured, unknown aspect
(L) Left
(P) Posterior—back
(R) Right
(S) Superior—upper
(W) Whole region

Lesion

(A) Abrasion
(M) Amputation
(V) Avulsion
(B) Burn
(K) Concussion
(C) Contusion
(N) Crush
(G) Detachment, separation
(D) Dislocation
(F) Fracture
(Z) Fracture and dislocation
(U) Injured, unknown lesion
(L) Laceration
(O) Other
(P) Perforation, puncture
(R) Rupture
(S) Sprain
(T) Strain
(E) Total severance, transection

System/Organ

(W) All systems in region
(A) Arteries—veins
(B) Brain
(D) Digestive
(E) Ears
(O) Eye
(H) Heart
(U) Injured, unknown system
(I) Integumentary
(J) Joints
(K) Kidneys
(L) Liver
(M) Muscles
(N) Nervous system
(P) Pulmonary—lungs
(R) Respiratory
(S) Skeletal
(C) Spinal cord
(Q) Spleen
(T) Thyroid, other endocrine gland
(V) Vertebrae

Abbreviated Injury Scale

(1) Minor injury
(2) Moderate injury
(3) Seriour injury
(4) Severe injury
(5) Critical injury
(6) Maximum (untreatable)
(7) Injured, unknown severity

09-5044A

OFFICIAL INJURY DATA — SKELETAL INJURIES

Restrained?

___ No

___ Yes

Blood Alcohol Level (mg/dl)

BAL = ____

Glasgow Coma Scale Score

GCSS = ____

Units of Blood Given

Units = ____

Aterial Blood Gases

pH = __.__

PO_2 = ____

PCO_2 ____

HCO_3 ____

Indicate the Location, Lesion, Detail (size, depth, fracture type, head injury clinical signs and neurological deficits), and Source of all injuries indicated by official sources (or from PAR or other unofficial sources if medical records and interviewee data are unavailable.)

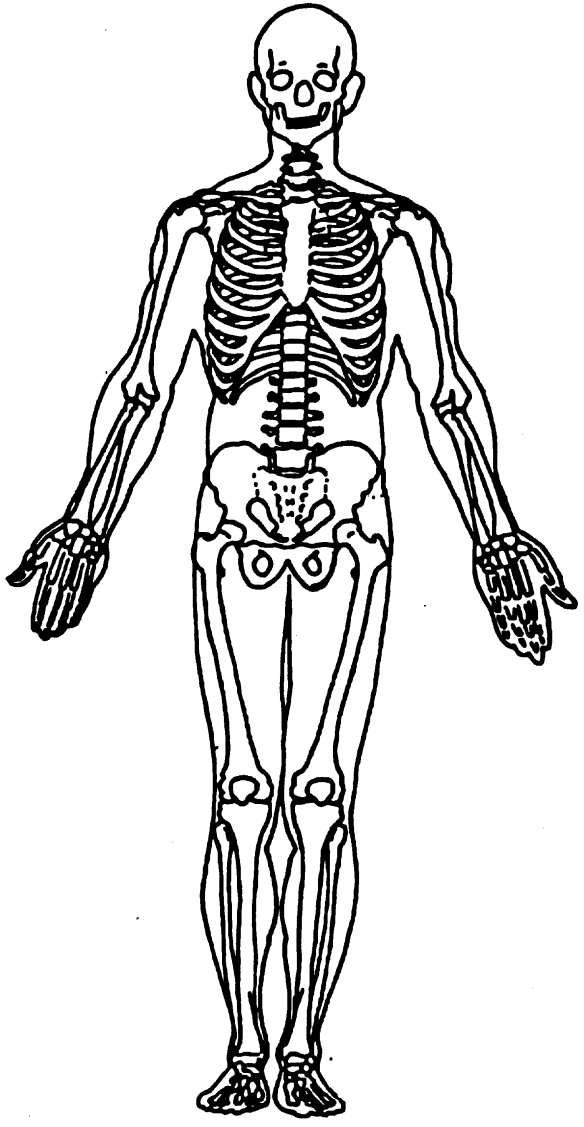

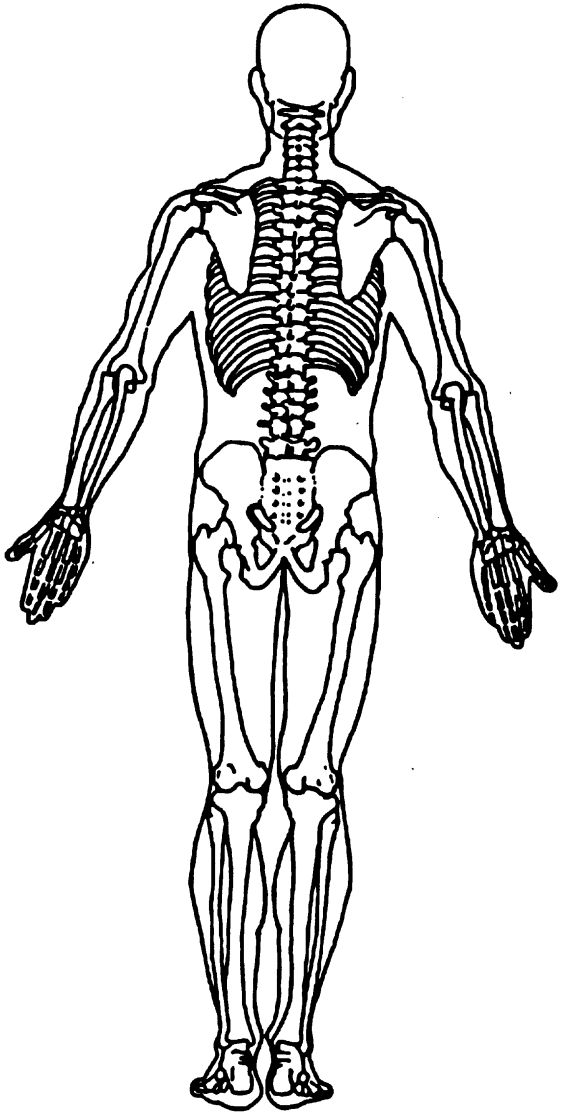

OFFICIAL INJURY DATA —INTERNAL INJURIES

Indicate the Location, Lesion, Detail (size, depth, fracture type, head injury clinical signs and neurological deficits), and Source of all injuries indicated by official sources (or from PAR or other unofficial sources if medical records and interviewee data are unavailable.)

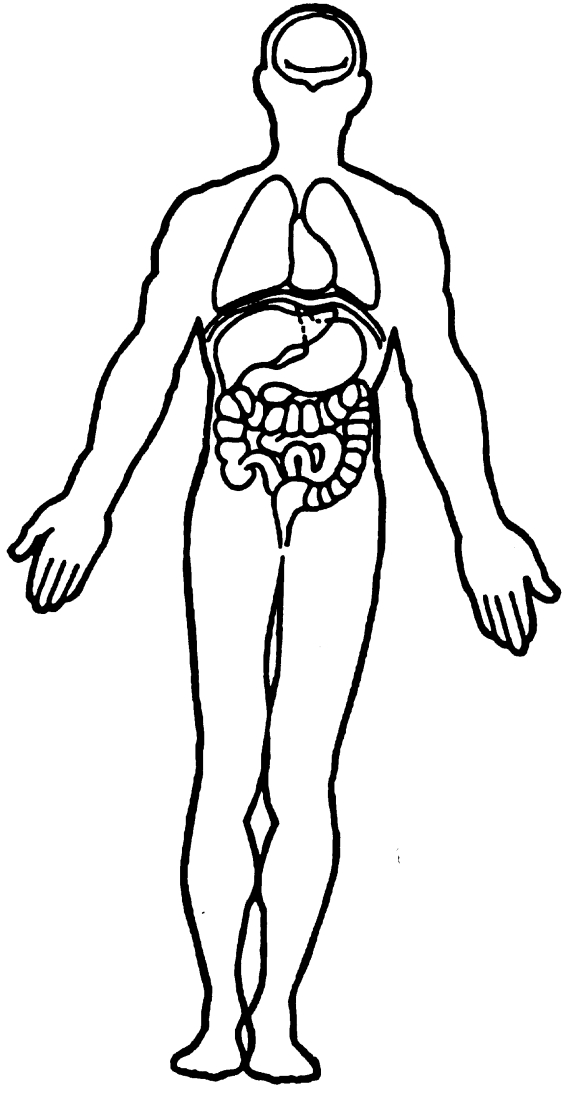

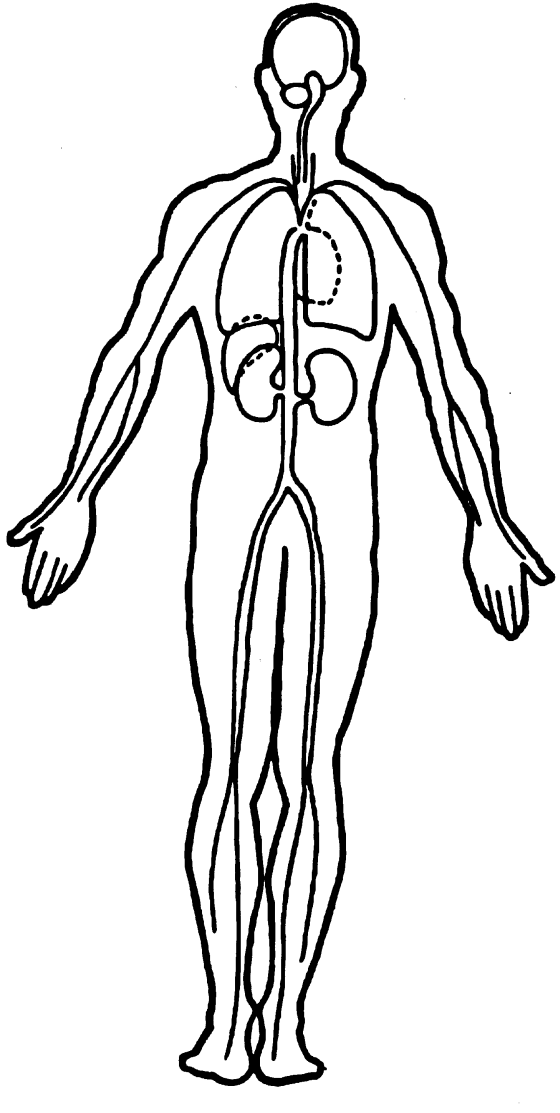

U.S. Department of Transportation
National Highway Traffic Safety Administration

CRASHPC PROGRAM SUMMARY

NATIONAL ACCIDENT SAMPLING SYSTEM
CRASHWORTHINESS DATA SYSTEM

Identifying Title

09	504A	01	[redacted] 92
Primary Sampling Unit	Case No.-Stratum	Accident Event Sequence No.	Date (Month, day, year) of Run

CRASHPC Vehicle Identification

	Year	Make	Model	NASS Veh. No.
Vehicle 1	1992	TOYOTA	COROLLA	1
Vehicle 2	1992	CHEVROLET	S-10 P/U	2

GENERAL INFORMATION

VEHICLE 1

Size 2

Weight 2253 (Curb) + 132 (Occupant(s)) + 0 (Cargo) = 2385

CDC 02RZAW9

PDOF ~~+070~~

Stiffness +722

VEHICLE 2

Size 3

Weight 2655 (Curb) + 175 (Occupant(s)) + 200 (Cargo) = 3030

CDC 11FDEW4

PDOF ~~-020~~

Stiffness -163

SCENE INFORMATION

Rest and Impact Positions [X] No, *Go To Damage Information* [ ] Yes

VEHICLE 1

Rest Position
- X ___.___
- Y ___.___
- PSI ___.___

Impact Position
- X ___.___
- Y ___.___
- PSI ___.___

Slip Angle ___

VEHICLE 2

Rest Position
- X ___.___
- Y ___.___
- PSI ___.___

Impact Position
- X ___.___
- Y ___.___
- PSI ___.___

Slip Angle ___

VEHICLE MOTION

Sustained Contact [ ] No [ ] Yes

VEHICLE 1

Skidding [ ] No [ ] Yes

Skidding Stop Before Rest [ ] No [ ] Yes

Impact Position
- X ___.___
- Y ___.___
- PSI ___.___

Curved Path [ ] No [ ] Yes

Point on Path
X ___.___ Y ___.___

Rotation Direction [ ] None [ ] CW [ ] CCW

Rotation >360° [ ] No [ ] Yes

VEHICLE 2

Skidding [ ] No [ ] Yes

Skidding Stop Before Rest [ ] No [ ] Yes

Impact Position
- X ___.___
- Y ___.___
- PSI ___.___

Curved Path [ ] No [ ] Yes

Point on Path
X ___.___ Y ___.___

Rotation Direction [ ] None [ ] CW [ ] CCW

Rotation >360° [ ] No [ ] Yes

FRICTION INFORMATION

Coefficient of Friction . ___ ___ ___

Rolling Resistance Option ___

Vehicle 1 Rolling Resistance

LF ___ . ___ ___ RF ___ . ___ ___

LF ___ . ___ ___ RF ___ . ___ ___

Vehicle 2 Rolling Resistance

LF ___ . ___ ___ RF ___ . ___ ___

LF ___ . ___ ___ RF ___ . ___ ___

TRAJECTORY INFORMATION

Trajectory Data [ ] No [ ] Yes

If No, Go To Damage Information

Vehicle 1 Steer Angles

LF ___ ___ ___ RF ___ ___ ___

LF ___ ___ ___ RF ___ ___ ___

Vehicle 2 Steer Angles

LF ___ ___ ___ RF ___ ___ ___

LF ___ ___ ___ RF ___ ___ ___

Terrain Boundary [ ] No [ ] Yes

First Point

X ___ ___ ___ . ___ Y ___ ___ ___ . ___

Second Point

X ___ ___ ___ . ___ Y ___ ___ ___ . ___

Secondary Coefficient of Friction . ___ ___ ___

DAMAGE INFORMATION

	VEHICLE 1	VEHICLE 2
Damage Length	98.8	60.3
Crush Depths C1	10.1	10.9
C2	44.1	13.0
C3	46.05	17.0
C4	43.8	19.4
C5	39.1	21.7
C6	0.0	33.2
Damage Offset	± 2.0	± 0.0

IF THIS COMMON IMPACT WAS WITH A MOTOR VEHICLE *NOT IN TRANSPORT,* FILL IN THE INFORMATION BELOW.

Model Year: _____

Make: _____

Model: _____

VIN: _____

The Weight, CDC, Scene Data and Damage Information for this vehicle should be recorded above.

Complete and ATTACH the appropriate vehicle damage sketch and dimensions to the Form.

BEST AVAILABLE

SUMMARY OF CRASHPC RESULTS (USING SPINOUT)

09-504A.01

SPEED CHANGE (DAMAGE)		TOTAL(MPH)	LONG.(MPH)	LAT.(MPH)	ANG.(DEG)
	VEH #1	59.9	-20.5	-56.3	70.0
	VEH #2	47.1	-44.3	16.1	-20.0

ENERGY DISSIPATED BY DAMAGE VEH#1:490218.9 FT-LB VEH#2: 98852.4 FT-LB

SUMMARY OF DAMAGE DATA (* INDICATES DEFAULT VALUE)

VEHICLE # 1			VEHICLE # 2		
TYPE---------CATEGORY	2		TYPE---------CATEGORY	3	
STIFFNESS----CATEGORY	2		STIFFNESS----CATEGORY	3	
WEIGHT-------	2385.0 LBS.		WEIGHT-------	3030.0 LBS.	
CDC----------02RZAW9			CDC----------11FDEW4		
L----------	98.8 IN.		L----------	60.3 IN.	
C1----------	10.1 IN.		C1----------	10.9 IN.	
C2----------	44.1 IN.		C2----------	13.0 IN.	
C3----------	46.0 IN.		C3----------	17.0 IN.	
C4----------	43.8 IN.		C4----------	19.4 IN.	
C5----------	39.1 IN.		C5----------	21.7 IN.	
C6----------	.0 IN.		C6----------	33.2 IN.	
D----------	-2.0		D----------	.0	
RHO----------	1.00	*	RHO----------	1.00	*
ANG----------	70.0 DEG.		ANG----------	-20.0 DEG.	
D'----------	-4.2 IN.		D'----------	5.0 IN.	

BEST AVAILABLE

DIMENSIONS AND INERTIAL PROPERTIES

A1	=	46.3	IN.	A2	=	51.3	IN.
B1	=	50.1	IN.	B2	=	55.5	IN.
TR1	=	54.6	IN.	TR2	=	58.9	IN.
I1	=	18299.9	LB-SEC**2-IN	I2	=	26187.5	LB-SEC**2-IN
M1	=	6.201	LB-SEC**2/IN	M2	=	7.878	LB-SEC**2/IN
XF1	=	83.3	IN.	XF2	=	89.8	IN.
XR1	=	-91.6	IN.	XR2	=	-106.4	IN.
YS1	=	33.6	IN.	YS2	=	36.3	IN.

Printing Picture: 504A

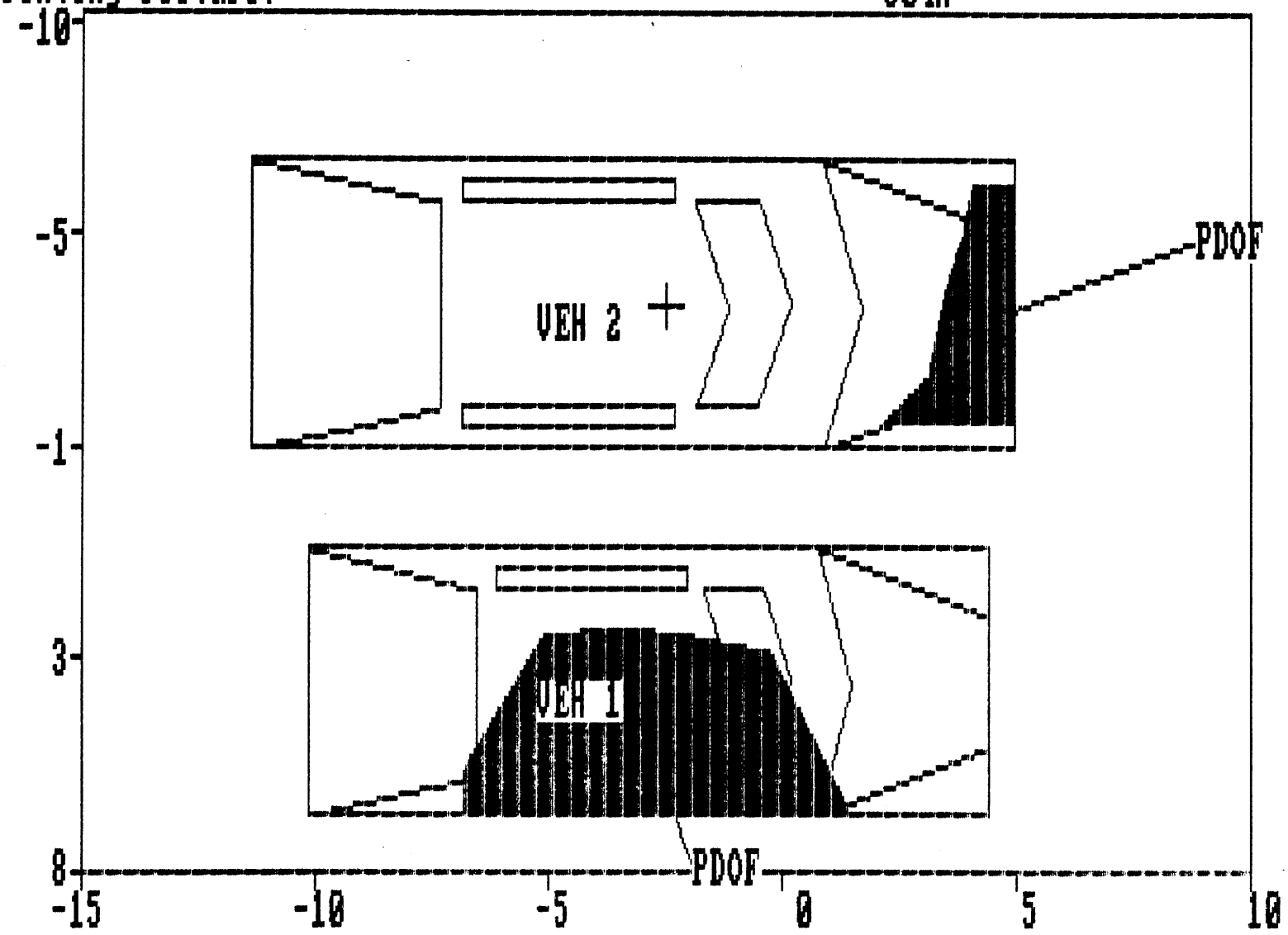

DAMAGE DESCRIPTION

BEST AVAILABLE

U.S. Department of Transportation
National Highway Traffic Safety Administration

CRASHPC PROGRAM SUMMARY

NATIONAL ACCIDENT SAMPLING SYSTEM
CRASHWORTHINESS DATA SYSTEM

Identifying Title

09	504A	01	[redacted] 92
Primary Sampling Unit	Case No.-Stratum	Accident Event Sequence No.	Date (Month, day, year) of Run

CRASHPC Vehicle Identification

	Year	Make	Model	NASS Veh. No.
Vehicle 1	1992	TOYOTA	COROLLA	1
Vehicle 2	1992	CHEVROLET	S-10 P/U	2

GENERAL INFORMATION

	VEHICLE 1	VEHICLE 2
Size	2	3
Weight (Curb + Occupant(s) + Cargo)	2253 + 132 + 0 = 2385	2655 + 175 + 200 = 3030
CDC	02RZAW9	11FDEW4
PDOF	+070	-020
Stiffness	2	8

SCENE INFORMATION

Rest and Impact Positions [ ] No, *Go To Damage Information* [X] Yes

	VEHICLE 1	VEHICLE 2
Rest Position		
X	+16.9	-15.6
Y	-35.3	-14.7
PSI	+143.0	+003.50
Impact Position		
X	+18.2	+28.0
Y	-05.7	-05.8
PSI	-84.2	180.0
Slip Angle	053	000

VEHICLE MOTION

Sustained Contact [X] No [ ] Yes

	VEHICLE 1	VEHICLE 2
Skidding	[X] No [ ] Yes	[X] No [ ] Yes
Skidding Stop Before Rest	[ ] No [ ] Yes	[ ] No [ ] Yes
Impact Position		
X	___.___	___.___
Y	___.___	___.___
PSI	___.___	___.___
Curved Path	[ ] No [X] Yes	[X] No [ ] Yes
Point on Path	X +09.4 Y -22.2	X ___.___ Y ___.___
Rotation Direction	[ ] None [X] CW [ ] CCW	[X] None [ ] CW [ ] CCW
Rotation >360°	[X] No [ ] Yes	[X] No [ ] Yes

HS Form 435D (1/92)

National Accident Sampling System-Crashworthiness Data System: CRASHPC Program Summary

FRICTION INFORMATION

Coefficient of Friction .80

Rolling Resistance Option 1

Vehicle 1 Rolling Resistance

LF .04 RF .04

LR .02 RR 1.00

Vehicle 2 Rolling Resistance

LF 1.00 RF 1.00

LR 0.02 RR 0.02

TRAJECTORY INFORMATION

Trajectory Data [ ] No [X] Yes

If No, Go To Damage Information

Vehicle 1 Steer Angles

LF ___ RF ___

LR ___ RR -35

Vehicle 2 Steer Angles

LF -10 RF +25

LR ___ RR ___

Terrain Boundary [ ] No [X] Yes

First Point

X 030.0 Y -34.2

Second Point

X 000.0 Y -34.2

Secondary Coefficient of Friction .65

DAMAGE INFORMATION

	VEHICLE 1	VEHICLE 2
Damage Length	98.8	60.3
Crush Depths C1	10.1	10.9
C2	44.1	13.0
C3	46.05	17.0
C4	43.8	19.4
C5	39.1	21.7
C6	0.0	33.2
Damage Offset	0 2.0	± 0.0

IF THIS COMMON IMPACT WAS WITH A MOTOR VEHICLE *NOT IN TRANSPORT,* FILL IN THE INFORMATION BELOW.

Model Year: _____

Make: _____

Model: _____

VIN: _____

The Weight, CDC, Scene Data and Damage Information for this vehicle should be recorded above.

Complete and ATTACH the appropriate vehicle damage sketch and dimensions to the Form.

BEST AVAILABLE

WARNING
SEPARATION VELOCITIES ALONG PDOF ARE NOT COMPATIBLE ACCORDING
TO ASSUMPTION OF A COMMON VELOCITY AT THE DAMAGE AREA CENTROIDS.

SUMMARY OF CRASHPC RESULTS (USING SPINOUT)

09-504A

		TOTAL(MPH)	LONG.(MPH)	LAT.(MPH)	
IMPACT SPEED					
(LINEAR MOMENTUM	VEH #1	38.3	23.0	30.6	
AND SPINOUT)	VEH #2	49.0	49.0	.0	
SPEED CHANGE		TOTAL(MPH)	LONG.(MPH)	LAT.(MPH)	ANG.(DEG)
(DAMAGE)	VEH #1	62.4	-24.3	-57.5	67.1
	VEH #2	49.1	-46.5	14.4	-17.1
(LINEAR MOMENTUM	VEH #1	33.9	-9.3	-32.6	74.2
AND SPINOUT)	VEH #2	26.7	-26.3	4.7	-10.0

ENERGY DISSIPATED BY DAMAGE VEH#1:510108.6 FT-LB VEH#2:113861.1 FT-LB

BEST AVAILABLE

SUMMARY OF DAMAGE DATA (* INDICATES DEFAULT VALUE)

VEHICLE # 1			VEHICLE # 2		
TYPE	CATEGORY 2		TYPE	CATEGORY 3	
STIFFNESS	CATEGORY 2		STIFFNESS	CATEGORY 6	
WEIGHT	2385.0 LBS.		WEIGHT	3030.0 LBS.	
CDC	02RZAW9		CDC	11FDEW4	
L	98.8 IN.		L	60.3 IN.	
C1	10.1 IN.		C1	10.9 IN.	
C2	44.1 IN.		C2	13.0 IN.	
C3	46.0 IN.		C3	17.0 IN.	
C4	43.8 IN.		C4	19.4 IN.	
C5	39.1 IN.		C5	21.7 IN.	
C6	.0 IN.		C6	33.2 IN.	
D	-2.0		D	.0	
RHO	1.00	*	RHO	1.00	*
ANG	67.1 DEG.		ANG	-17.1 DEG.	
D'	-4.2 IN.		D'	5.0 IN.	

BEST AVAILABLE

SCENE INFORMATION

	VEHICLE # 1		VEHICLE # 2	
IMPACT X-POSITION	18.20	FT.	28.00	FT.
IMPACT Y-POSITION	-5.70	FT.	-5.80	FT.
IMPACT HEADING ANGLE	-84.20	DEG.	180.00	DEG.
REST X-POSITION	16.90	FT.	-15.80	FT.
REST Y-POSITION	-35.30	FT.	-14.70	FT.
REST HEADING ANGLE	143.00	DEG.	3.50	DEG.
END-OF-ROTATION X-POSITION	18.20	FT.	28.00	FT.
END-OF-ROTATION Y-POSITION	-5.70	FT.	-5.80	FT.
END-OF-ROTATION HEADING ANGLE	-84.20	DEG.	180.00	DEG.
DIRECTION OF ROTATION	CW		CW	
AMOUNT OF ROTATION	<360		<360	

BEST AVAILABLE

DIMENSIONS AND INERTIAL PROPERTIES

A1	=	46.3	IN.	A2	=	51.3	IN.
B1	=	50.1	IN.	B2	=	55.5	IN.
TR1	=	54.6	IN.	TR2	=	58.9	IN.
I1	=	18299.9	LB-SEC**2-IN	I2	=	26137.5	LB-SEC**2-IN
M1	=	6.201	LB-SEC**2/IN	M2	=	7.878	LB-SEC**2/IN
XF1	=	83.3	IN.	XF2	=	89.8	IN.
XR1	=	-91.6	IN.	XR2	=	-108.4	IN.
YS1	=	33.6	IN.	YS2	=	36.3	IN.

ROLLING RESISTANCE

VEHICLE # 1

LF----------	.04
RF----------	.04
LR----------	.02
RR----------	1.00

MU---------- .80

VEHICLE # 2

LF----------	1.00
RF----------	1.00
LR----------	.02
RR----------	.02

BEST AVAILABLE

COLLISION CONDITIONS

VEHICLE # 1			VEHICLE # 2		
XC10'	=	18.2 FT.	XC20'	=	28.0 FT.
YC10'	=	-5.7 FT.	YC20'	=	-5.8 FT.
PSI10	=	-84.2 DEG.	PSI20	=	160.0 DEG.
PSI1DO	=	.0 DEG/SEC	PSI2DO	=	.0 DEG/SEC
BETA1	=	53.0 DEG.	BETA2	=	.0 DEG.

SEPARATION CONDITIONS (USING SPINOUT)

VEHICLE # 1			VEHICLE #2		
US1	=	13.8 MPH	US2	=	22.8 MPH
VS1	=	-2.0 MPH	VS2	=	4.7 MPH
PSISD1	=	.0 DEG/SEC	PSISD2	=	.0 DEG/SEC

RELATIVE VELOCITY (LINEAR MOMENTUM)	VEHICLE #1	VEHICLE #2
SPEED ALONG LINE THRU CG:	2.6 MPH	49.0 MPH
SPEED ORTHOG. TO CG LINE:	-22.9 MPH	.5 MPH

CLOSING VELOCITY (LINEAR MOMENTUM) : 51.6 MPH

Printing Picture: 503

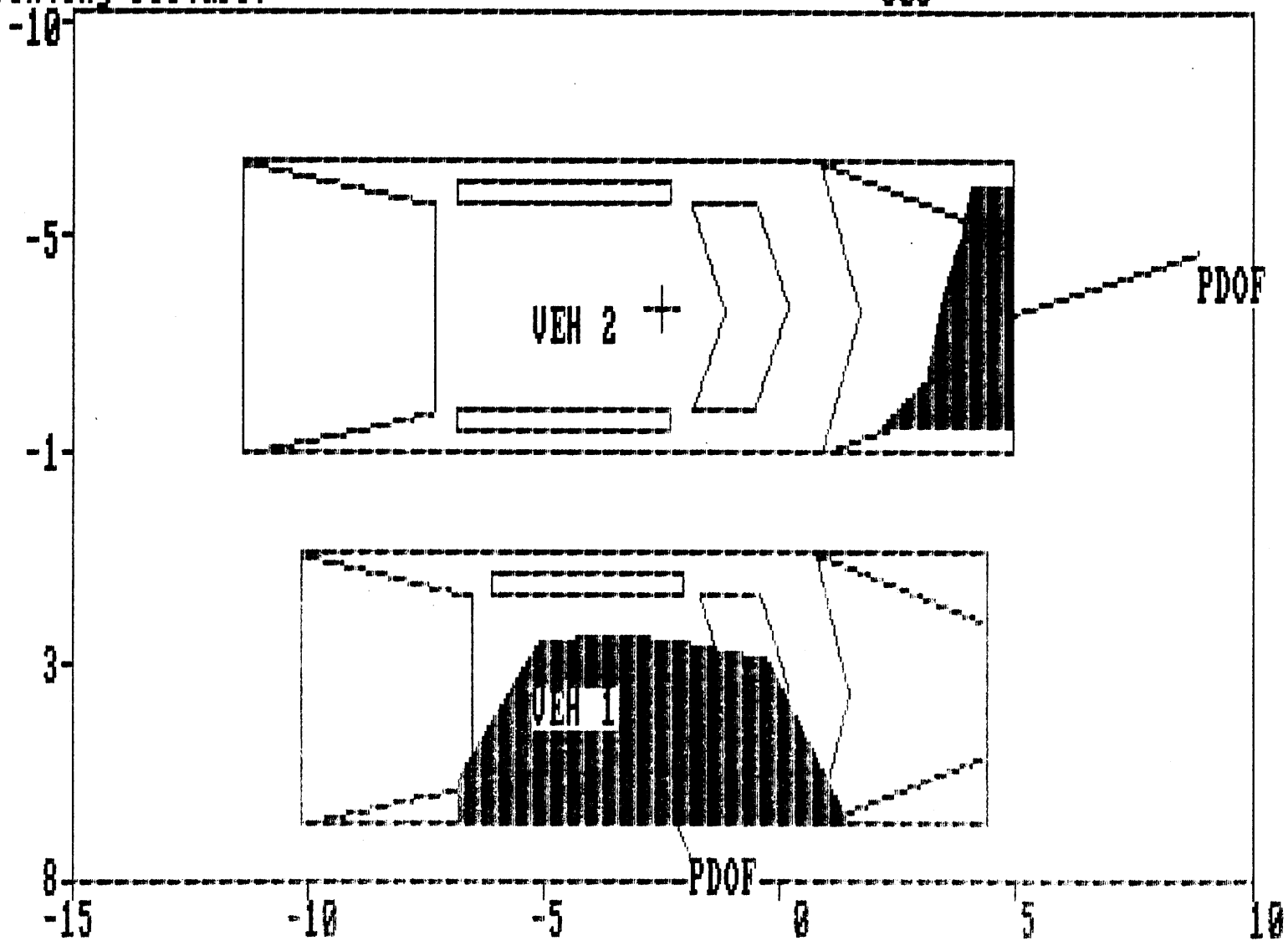

DAMAGE DESCRIPTION

BEST AVAILABLE

Printing Picture: 503

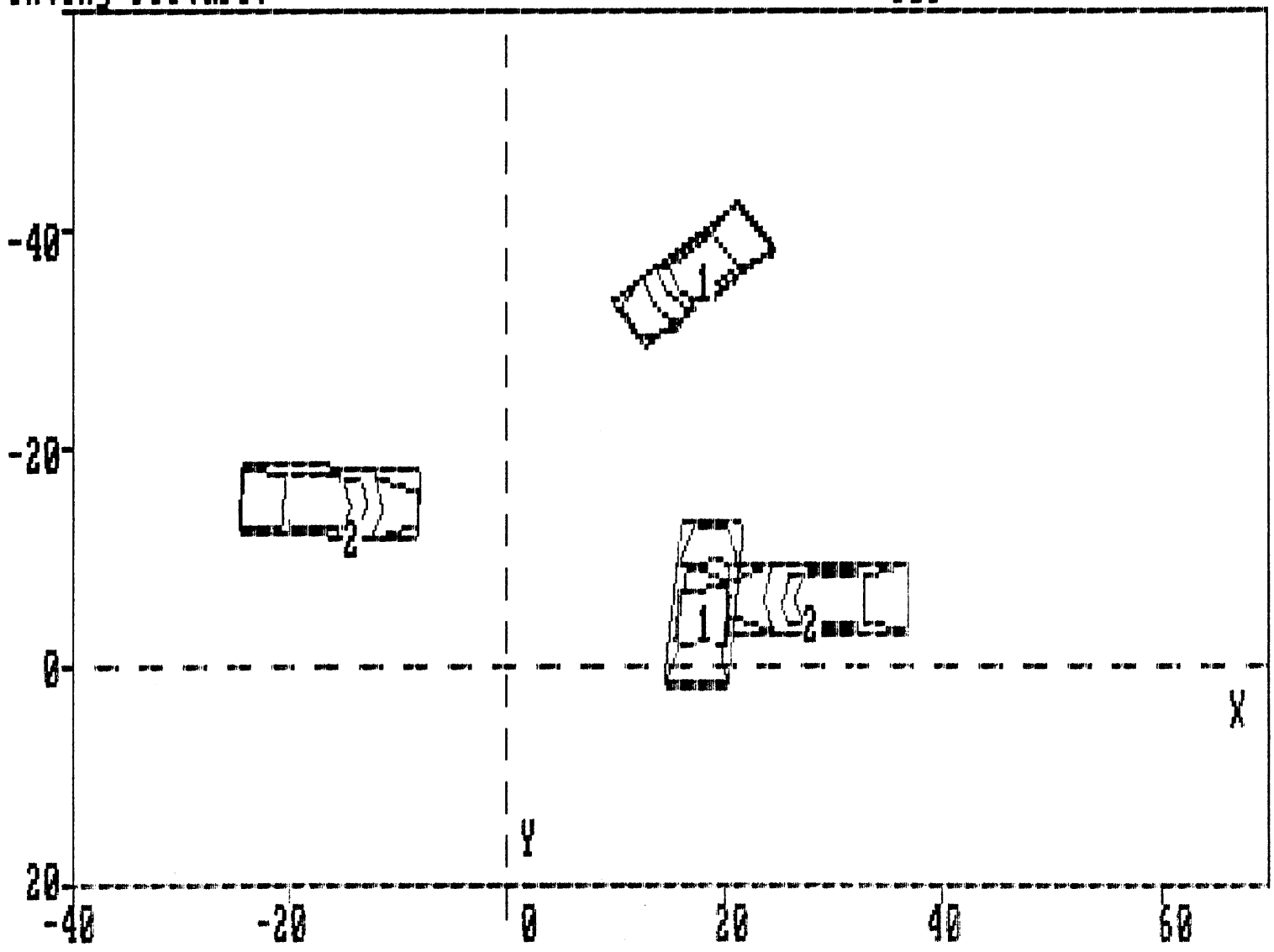

SCENE DESCRIPTION

BEST AVAILABLE

Printing Picture: 503

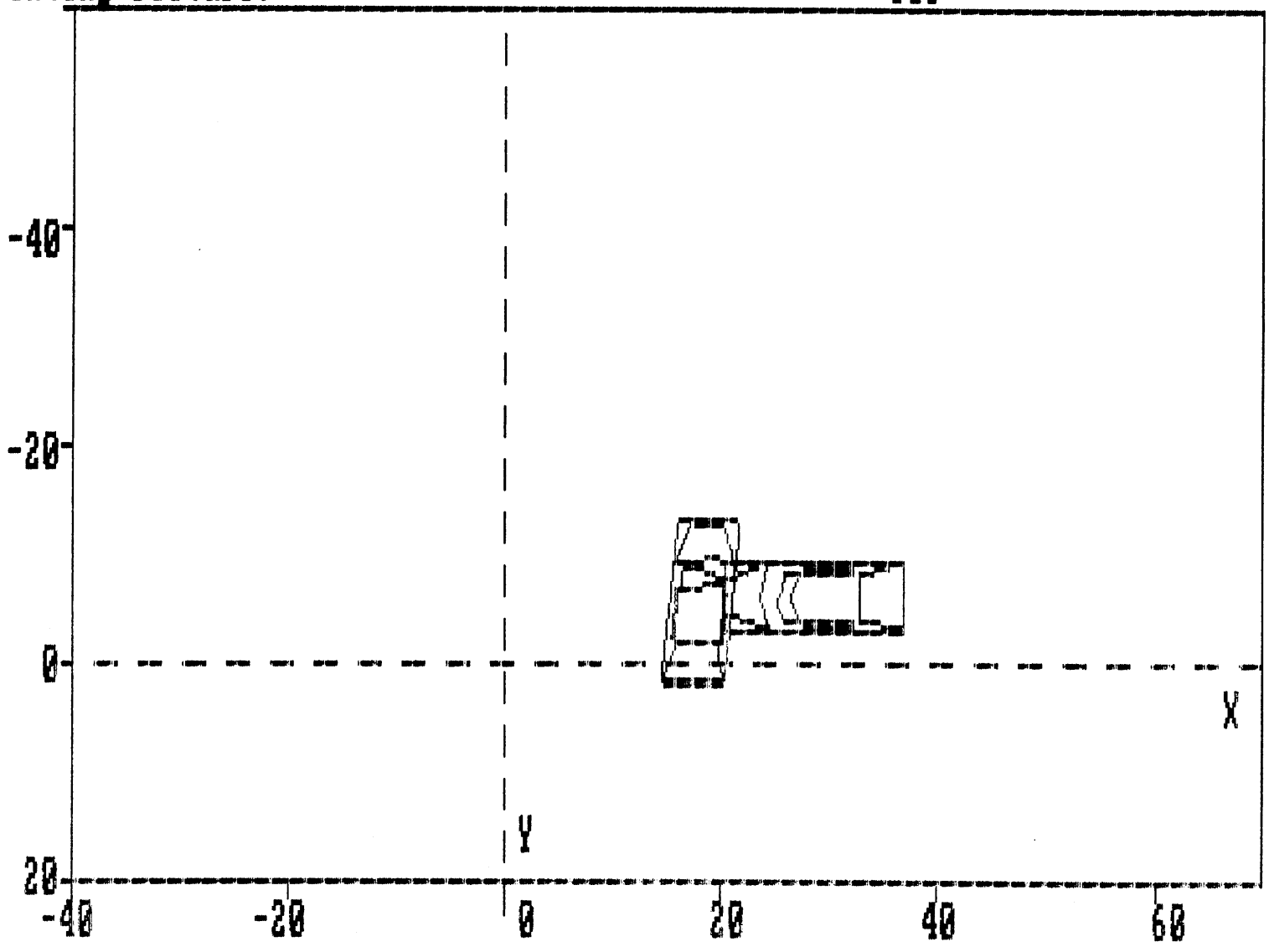

VEHICLE TRAJECTORY: POSITION 1

BEST AVAILABLE

Printing Picture: 503

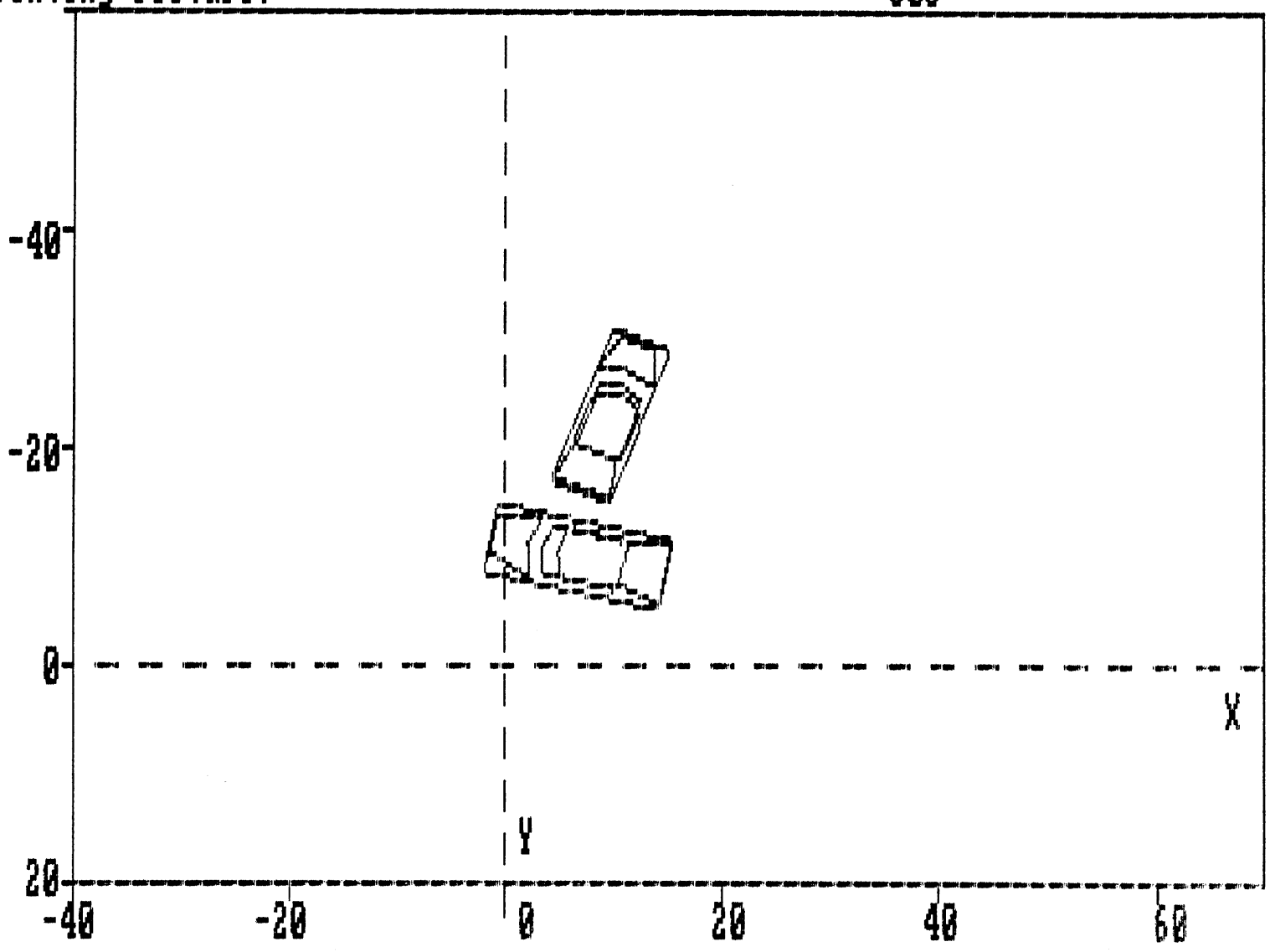

VEHICLE TRAJECTORY: POSITION 2

BEST AVAILABLE

Printing Picture: 503

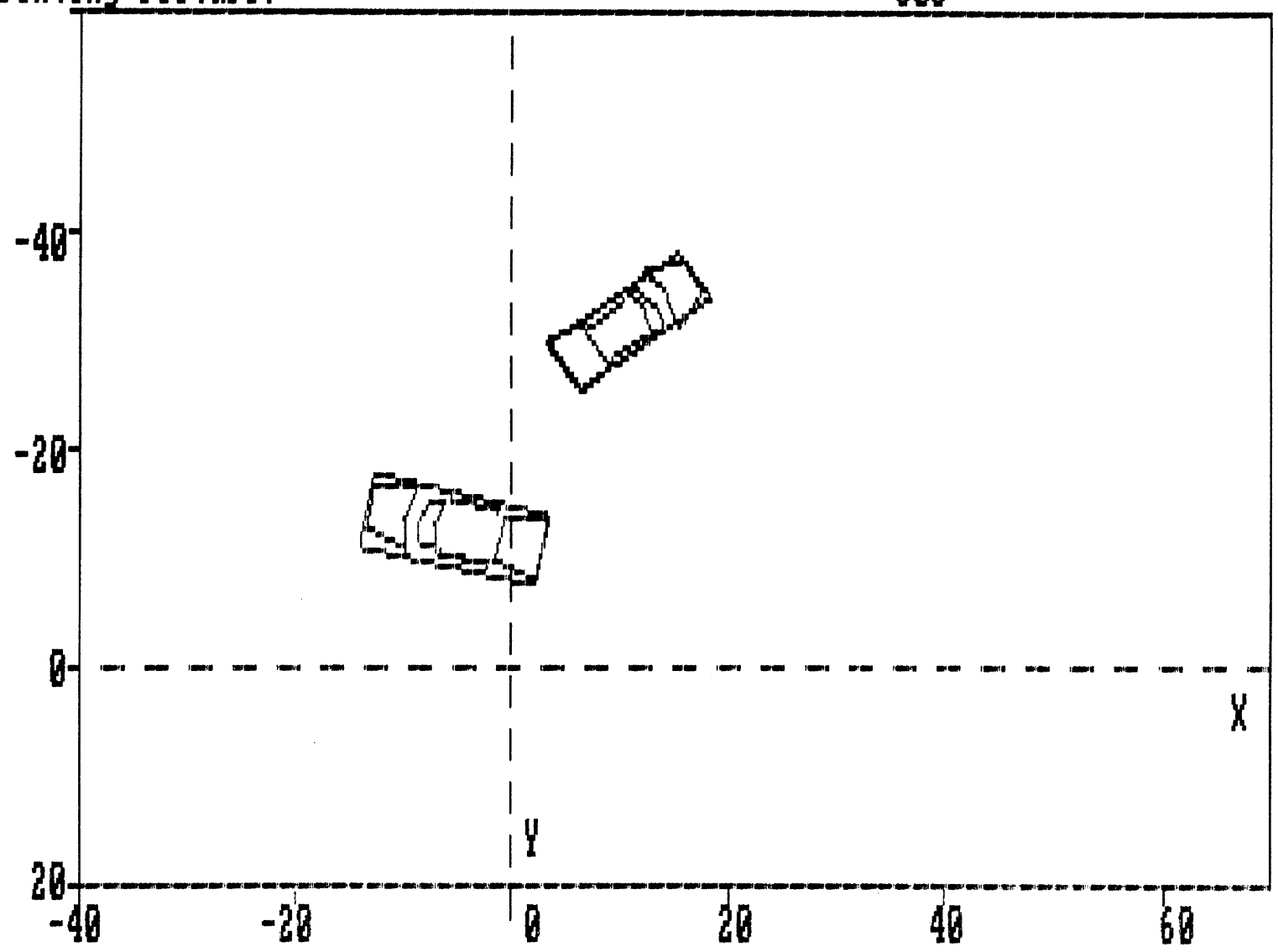

VEHICLE TRAJECTORY: POSITION 3

BEST AVAILABLE

Printing Picture: 503

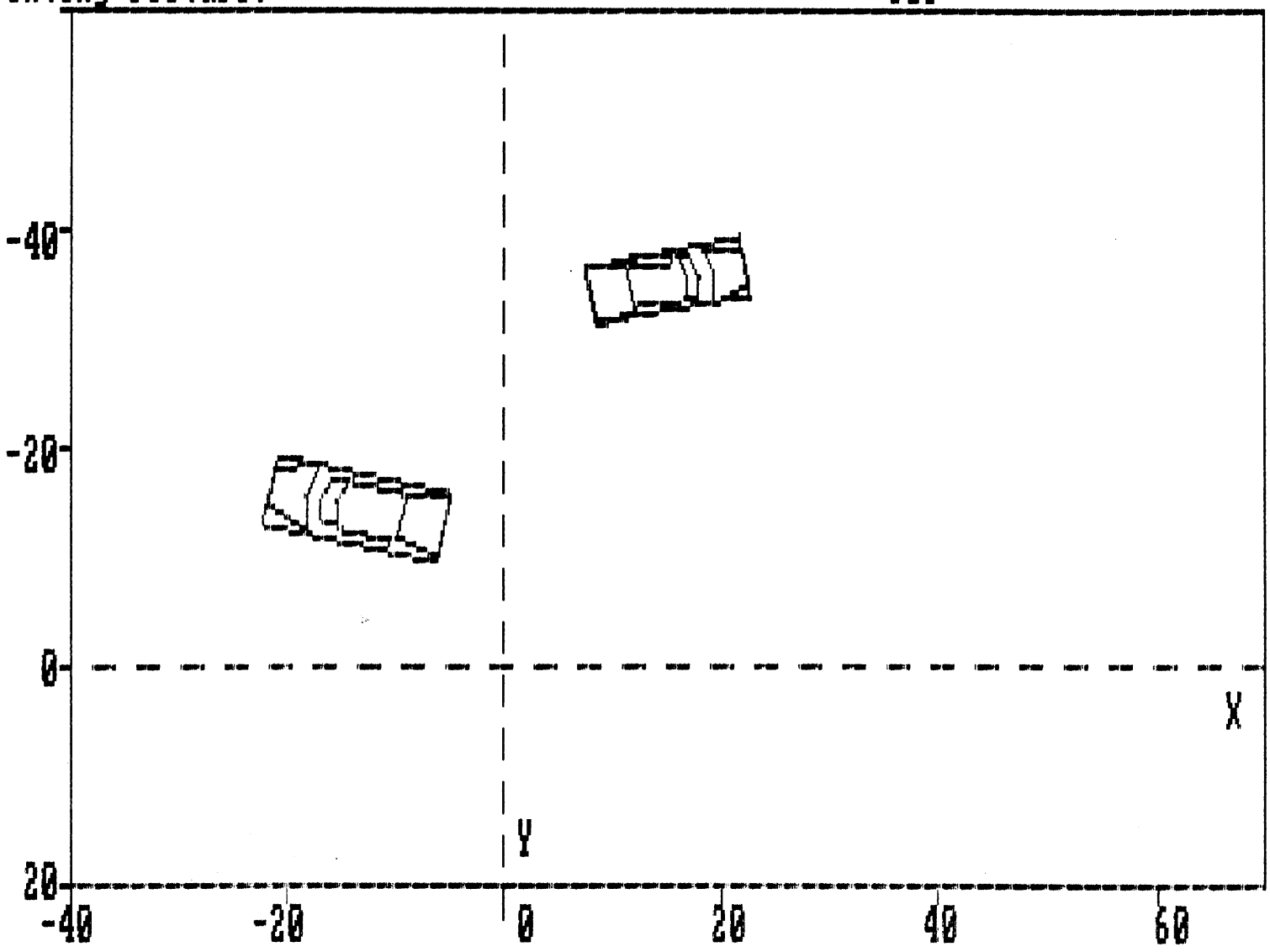

VEHICLE TRAJECTORY: POSITION 4

BEST AVAILABLE

Printing Picture: 503

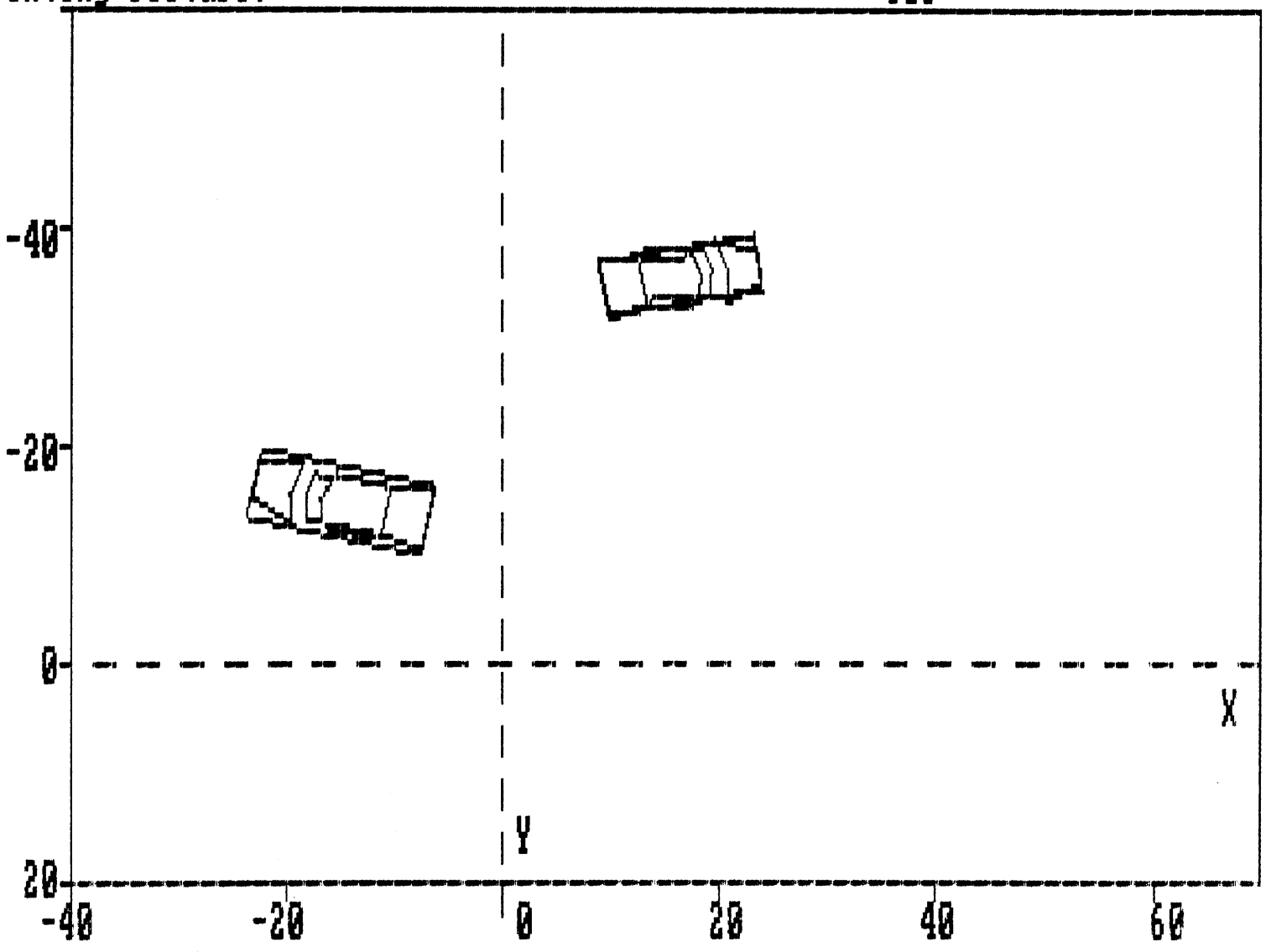

VEHICLE TRAJECTORY: POSITION 5

BEST AVAILABLE

Printing Picture: 503

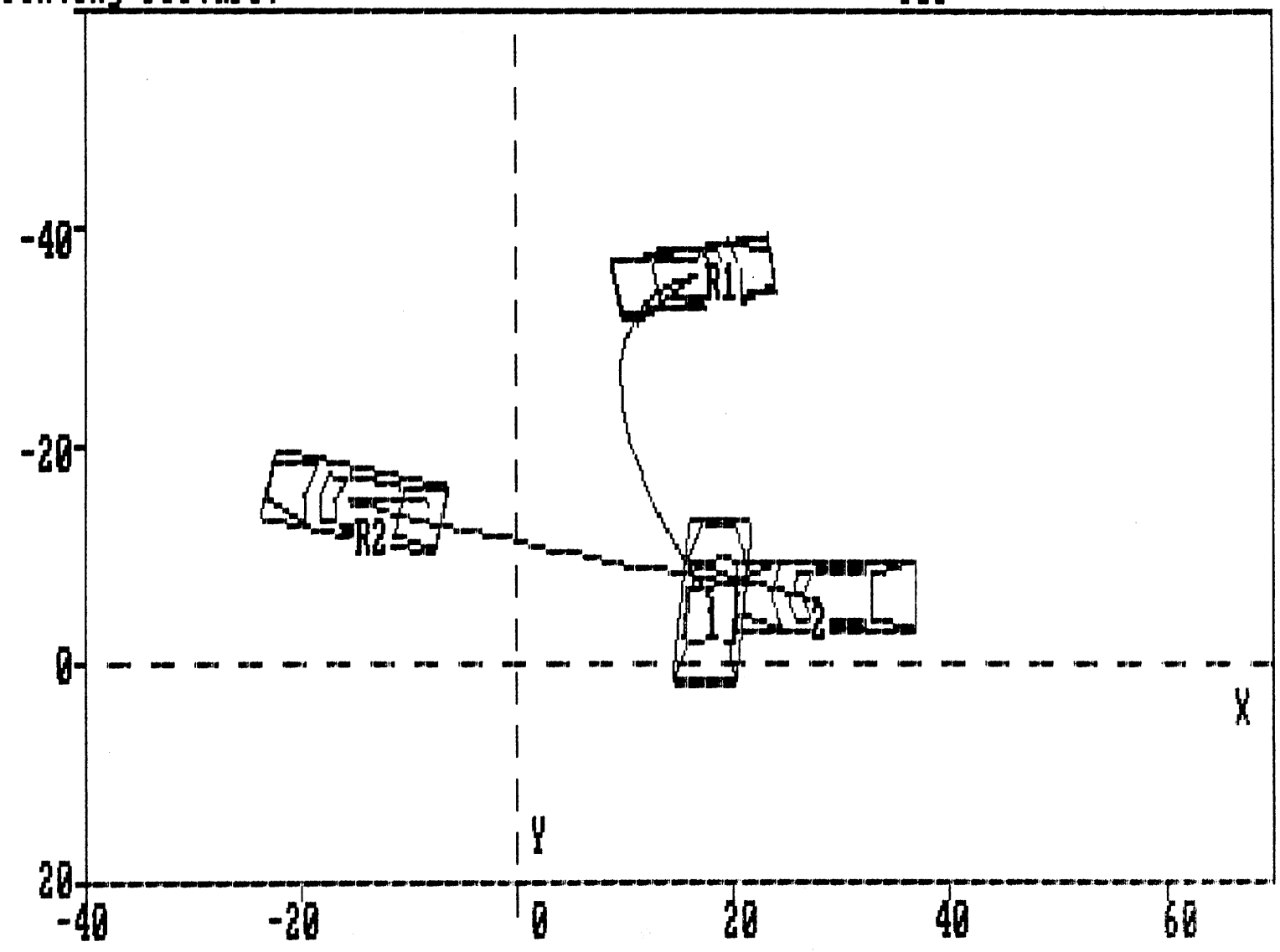

TRAJECTORY PATH

BEST AVAILABLE

BEST AVAILABLE

FINAL RUN @ Z/C.

WARNING
SEPARATION VELOCITIES ALONG PDOF ARE NOT COMPATIBLE ACCORDING
TO ASSUMPTION OF A COMMON VELOCITY AT THE DAMAGE AREA CENTROIDS.

SUMMARY OF CRASHPC RESULTS (USING SPINOUT)

NASS ZC run for 09-504A

		TOTAL(MPH)	LONG.(MPH),	LAT.(MPH)	
IMPACT SPEED					
(LINEAR MOMENTUM	VEH #1	51.2	33.9	38.3	
AND SPINOUT)	VEH #2	58.9	58.9	.0	
SPEED CHANGE		TOTAL(MPH)	LONG.(MPH)	LAT.(MPH)	ANG.(DEG)
(DAMAGE)	VEH #1	46.9	-24.8	-39.9	58.2
	VEH #2	36.9	-35.4	10.7	-16.9
(LINEAR MOMENTUM	VEH #1	46.6	-18.2	-42.9	67.0
AND SPINOUT)	VEH #2	36.7	-36.3	5.1	-8.0

ENERGY DISSIPATED BY DAMAGE VEH#1:246100.9 FT-LB VEH#2:108096.9 FT-LB

SCENE INFORMATION

	VEHICLE # 1		VEHICLE # 2	
IMPACT X-POSITION	17.50	FT.	27.50	FT.
IMPACT Y-POSITION	-5.70	FT.	-5.00	FT.
IMPACT HEADING ANGLE	-75.00	DEG.	180.00	DEG.
REST X-POSITION	16.90	FT.	-15.60	FT.
REST Y-POSITION	-35.30	FT.	-14.70	FT.
REST HEADING ANGLE	143.00	DEG.	3.50	DEG.
END-OF-ROTATION X-POSITION	17.50	FT.	27.50	FT.
END-OF-ROTATION Y-POSITION	-5.70	FT.	-5.00	FT.
END-OF-ROTATION HEADING ANGLE	-75.00	DEG.	180.00	DEG.
DIRECTION OF ROTATION	CW		CW	
AMOUNT OF ROTATION	<360		<360	

COLLISION CONDITIONS

VEHICLE # 1				VEHICLE # 2			
XC10'	=	17.5	FT.	XC20'	=	27.5	FT.
YC10'	=	-5.7	FT.	YC20'	=	-5.0	FT.
PSI10	=	-75.0	DEG.	PSI20	=	180.0	DEG.
PSI1DO	=	.0	DEG/SEC	PSI2DO	=	.0	DEG/SEC
BETA1	=	48.5	DEG.	BETA2	=	.0	DEG.

SEPARATION CONDITIONS (USING SPINOUT)

VEHICLE # 1				VEHICLE #2			
US1	=	15.7	MPH	US2	=	22.6	MPH
VS1	=	-4.6	MPH	VS2	=	5.1	MPH
PSISD1	=	.0	DEG/SEC	PSISD2	=	.0	DEG/SEC

RELATIVE VELOCITY (LINEAR MOMENTUM)	VEHICLE #1	VEHICLE #2
SPEED ALONG LINE THRU CG:	6.5 MPH	58.8 MPH
SPEED ORTHOG. TO CG LINE:	-33.3 MPH	-4.1 MPH

CLOSING VELOCITY (LINEAR MOMENTUM) : 65.3 MPH

SUMMARY OF DAMAGE DATA (* INDICATES DEFAULT VALUE)

VEHICLE # 1

TYPE--------CATEGORY 2
STIFFNESS---CATEGORY 2
WEIGHT------ 2385.0 LBS.
CDC---------03RZAW8
L---------- 90.0 IN.
C1---------- .0 IN.
C2---------- 25.5 IN.
C3---------- 27.6 IN.
C4---------- 30.7 IN.
C5---------- 31.0 IN.
C6---------- .0 IN.
D---------- -2.0
RHO--------- 1.00 *
ANG--------- 58.2 DEG.
D'---------- -.5 IN.

VEHICLE # 2

TYPE--------CATEGORY 3
STIFFNESS---CATEGORY 8
WEIGHT------ 3030.0 LBS.
CDC---------12FDEW4
L---------- 57.4 IN.
C1---------- 10.9 IN.
C2---------- 13.0 IN.
C3---------- 17.0 IN.
C4---------- 19.4 IN.
C5---------- 21.7 IN.
C6---------- 33.2 IN.
D---------- .0
RHO--------- 1.00 *
ANG--------- -16.9 DEG.
D'---------- 4.7 IN.

DIMENSIONS AND INERTIAL PROPERTIES

A1	=	46.3	IN.	A2	=	51.3	IN.
B1	=	50.1	IN.	B2	=	55.5	IN.
TR1	=	54.6	IN.	TR2	=	58.9	IN.
I1	=	18299.9	LB-SEC**2-IN	I2	=	26187.5	LB-SEC**2-IN
M1	=	6.201	LB-SEC**2/IN	M2	=	7.878	LB-SEC**2/IN
XF1	=	83.3	IN.	XF2	=	89.8	IN.
XR1	=	-91.6	IN.	XR2	=	-106.4	IN.
YS1	=	33.6	IN.	YS2	=	36.3	IN.

ROLLING RESISTANCE

VEHICLE # 1

LF----------	.25
RF----------	.25
LR----------	.02
RR----------	1.00
MU----------	.80

VEHICLE # 2

LF----------	1.00
RF----------	1.00
LR----------	.02
RR----------	.02

Printing Picture:

TEST7

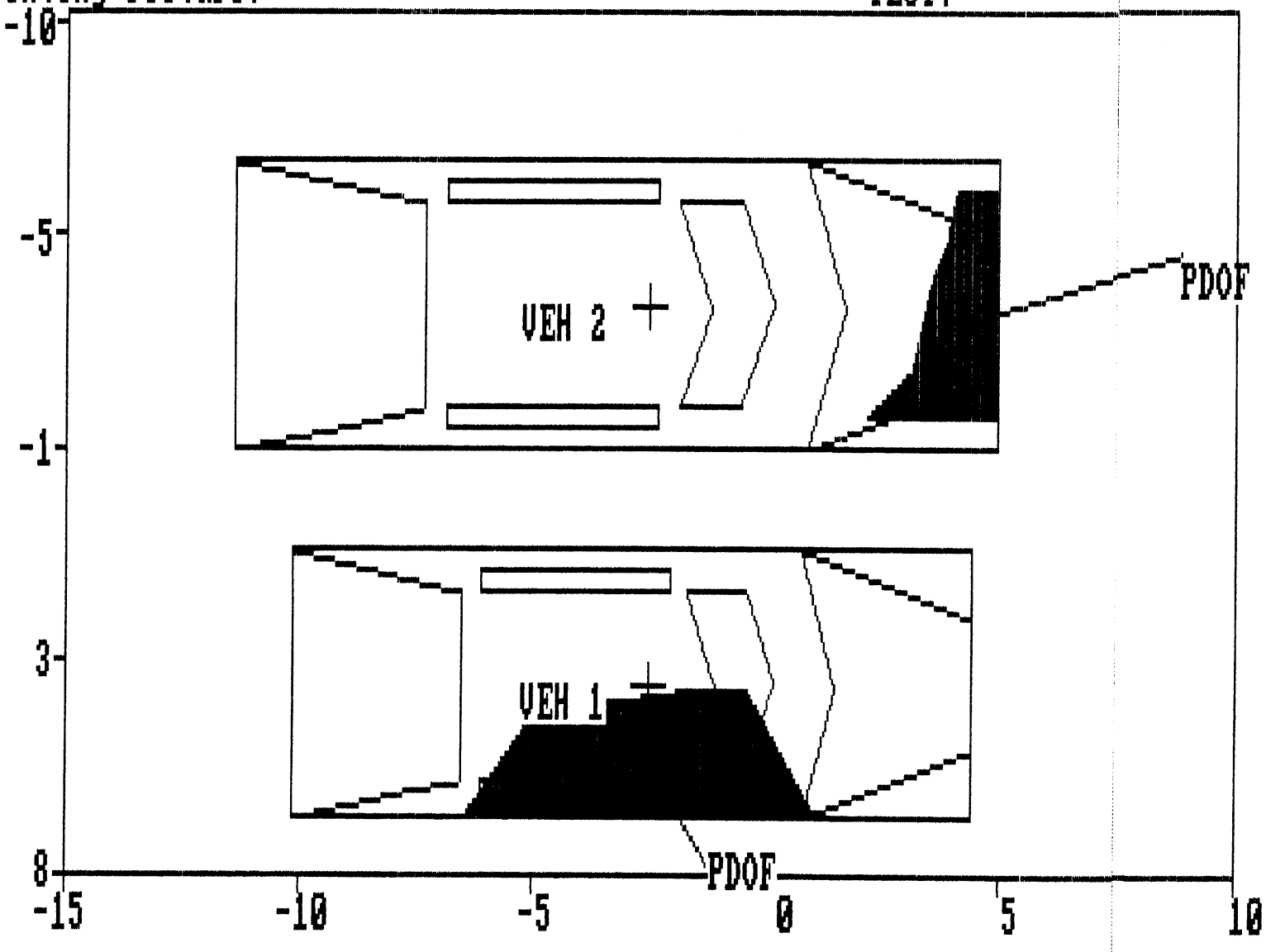

DAMAGE DESCRIPTION

Printing Picture: TEST7

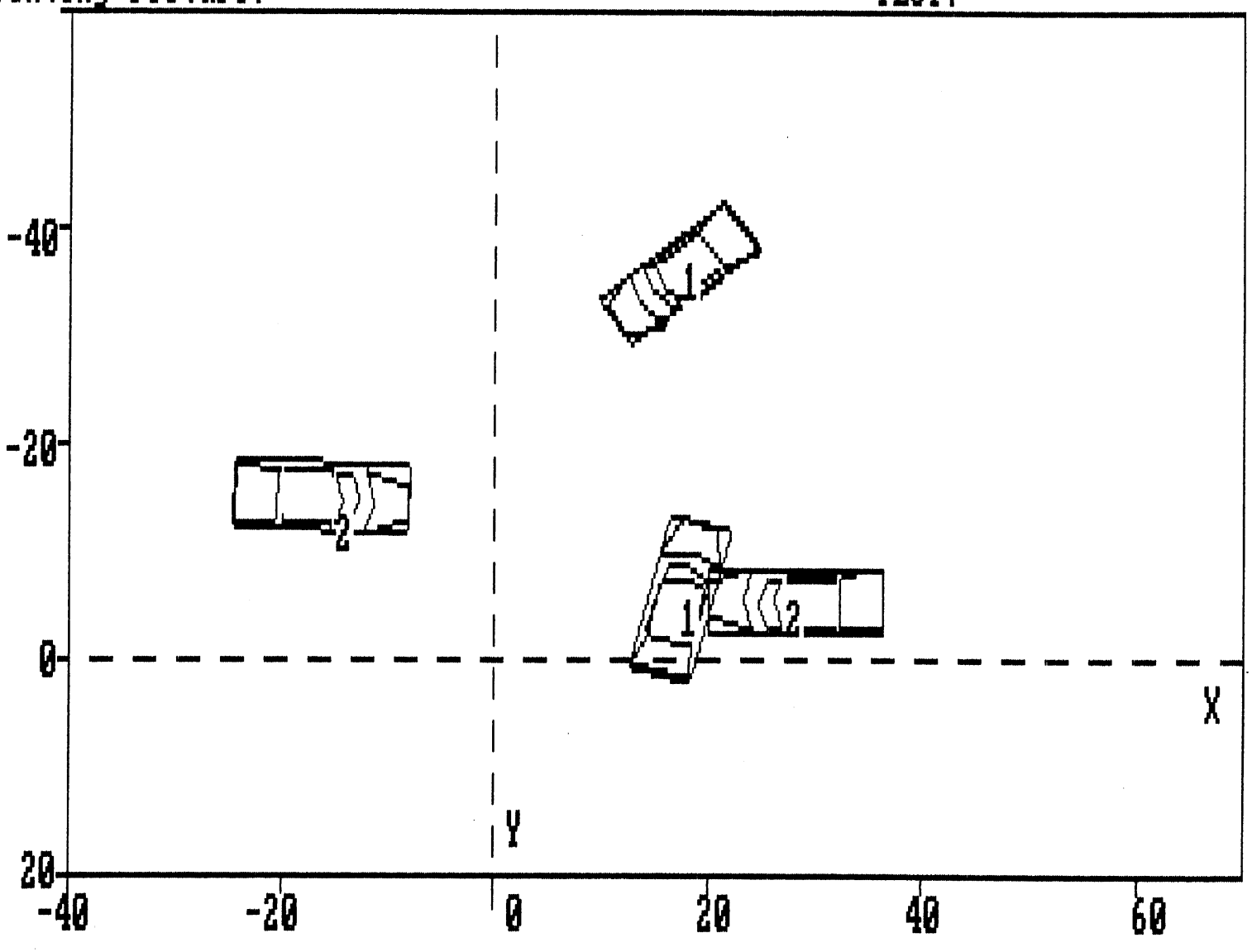

SCENE DESCRIPTION

```
09504A00000011[redacted]925.0410000000000207560010001[redacted]92[redacted]92[redacted]93[redacted]92010191000
000000000000000
09504A00010012[redacted]925.0410000000000101R0215F
09504A01000021        5.04 0000000009249032042T1AE97A4NC1[redacted]19900055996610101023
00010000074345247-22-412461111
09504A01000022        5.04 0000000000020909090909090909[redacted]90000000011299
09504A01000031        5.04 000000000010202RZAW08                099104446443900-002
                  0109570001
09504A01000041        5.04 00000000098233305000026666686000000001222220212222101
09504A01000042        5.04 0000000001210431213431206431310431306432210432207432310
432307431313431              204003080
09504A01010051        5.04 0000000003126415411192342030311000440160000000000004100
062019900003911111101101
09504A01010161        5.04 0000000001HRFS2792100
09504A01010261        5.04 0000000001HIFS3732100
09504A01010361        5.04 0000000001HIFS3732100
09504A01010461        5.04 0000000001FIFS2732100
09504A01010561        5.04 0000000001FRFS1732100
09504A01010661        5.04 0000000001FCFS1733100
09504A01010761        5.04 0000000001CBFS4301101
09504A01010861        5.04 0000000001CCFS2301101
09504A01010961        5.04 0000000001ARFS2301101
09504A01011061        5.04 0000000001ALFS2202100
09504A01011161        5.04 0000000001WLDJ3043100
09504A01011261        5.04 0000000001HWUB3732100
09504A01011361        5.04 0000000001HILB4331107
09504A01011461        5.04 0000000001HICB3331107
09504A01011561        5.04 0000000001HSLB4331107
09504A01011661        5.04 0000000001HILB6331107
09504A01011761        5.04 0000000001CCEA6301101
09504A01011861        5.04 0000000001CCLH5301101
09504A01011961        5.04 0000000001CRLP2301101
09504A01012061        5.04 0000000001CLLP2301101
09504A01012161        5.04 0000000001CRCP3301101
09504A01012261        5.04 0000000001MLLQ2302101
09504A01012361        5.04 0000000001MRLL4302101
09504A01012461        5.04 0000000001MRCK2302101
09504A01012561        5.04 0000000001MRLK2302101
09504A01012661        5.04 0000000001MILG2302101
09504A01012761        5.04 0000000001HSCI2533102
09504A01012861        5.04 0000000001FRCO1731100
09504A01012961        5.04 0000000001FLAI2413100
09504A01013061        5.04 0000000001ARLI1302101
09504A01013161        5.04 0000000001ALAI1413100
09504A01013261        5.04 0000000001ARAI1302101
09504A01013361        5.04 0000000001MRAI1312101
09504A01013461        5.04 0000000001YRCI2302101
09504A01013561        5.04 0000000001YRAI1572100
09504A01013661        5.04 0000000001TRLI1312101
09504A01013761        5.04 0000000001TLCI1212100
09504A01013861        5.04 0000000001NLAI1413100
09504A01013961        5.04 0000000001TRCI1312101
```

BEST AVAILABL

09504A02000021 5.04 0000000009220471301GCCS14A1N81[redacted]19909655036610101027
02010000345074237-36+081081110
09504A02000022 5.04 0000000000000000000000000000[redacted]10000000016221
09504A02000031 5.04 000000000010111FDEW04 060111317192233 000
0110830001
09504A02000041 5.04 0000000001133000000002608868800000000120002001200010
09504A02000042 5.04 0000000001305321205329825221304221203221102221117231127
231105121306131 307005180
09504A02010051 5.04 0000000002217217511110000040411000430510000000000003310
44000000000005000000102901
09504A02010161 5.04 0000000007QRFS2591100
09504A02010261 5.04 0000000007WLLI1092106
09504A02010361 5.04 0000000007CCCI1411100
09504A02010461 5.04 0000000007SLCI1411100
09504A02010561 5.04 0000000007FILI1042100
09504A99999999000000000000000000000000000000000000000000000100000000010000
00001000000000

BEST AVAILABLE

INTERIOR VEHICLE Vehicle: 1

11

INTRA ERRORS

OCC0531 2 ****** THIS CASE SHOWS A DO
OR OR HATCH OR GATE OPENING ****** CC0532 ****** CHECK YOUR DATA AND
IF CORRECT, NOTIFY YOUR ZONE ****** CC0533 DOOR LEFT FRONT IV05 equals
2 or IV06 equals 2 or IV07 equals 2 CC0534 or IV08 equals 2 or IV09 eq
uals 2.

0

OCCUPANT ASSESSMENT Vehicle: 1 Occupant: 1

11

INTRA ERRORS

OHH1271 2 ******* THI
S CASE SHOWS EJECTION WITH RESTRAINT USEAGE. ****** HH1272 ****** CHE
CK YOUR DATA AND IF CORRECT, NOTIFY YOUR ZONE ****** HH1273 EJECTION OA
12 is equal to 1-3 and ((MANUAL BELT USE OA18 does HH1274 not equal 0
0 or01) or (AIR BAG DEPLOYMENT OA22 does not equal HH1275 0 or 4) or
AUTOMATIC BELT USE OA45 does not equal 0 or 2)).

0

OCCUPANT INJURY Vehicle: 1 Occupant: 1

11

INTRA ERRORS

OTT0541 2 ****** THIS CA
SE SHOWS A RESTRAINT AS THE INJURY SOURCE ****** TT0542 ******
FOR AN AIS-2 (OR GREATER) INJURY. ****** TT0543 ****** CHECK FO
R ACCURATE AND COMPLETED DOCUMENTS & DATA ****** TT0544 INJURY SOURCE O
I11(n) equals 41, 42, 43 or 45 and A.I.S. TT0545 SEVERITY OI10(n
) is greater than 1.

0

PSU09 ERROR SUMMARY SCREEN [redacted]93
CASE 504A
CURRENT VERSION: 5.04

FORM NAME	NUMBER OF DOLLAR SIGNS	NUMBER OF LEVEL 1 ERRORS	NUMBER OF LEVEL 2 ERRORS	VERSION NUMBER CONSISTENT
Accident	0	0	0	Y
General Vehicle	0	0	0	Y
Vehicle Exterior	0	0	0	Y
Vehicle Interior	0	0	1	Y
Occupant Assesment	0	0	1	Y
Occupant Interior	0	0	1	Y
Total Inter Errors		0	0	
Total Case Errors	0	0	3	

```
CC0531  2  ****** THIS CASE SHOWS A DOOR OR HATCH OR GATE OPENING ******
CC0532     ****** CHECK YOUR DATA AND IF CORRECT, NOTIFY YOUR ZONE ******
CC0533     DOOR LEFT FRONT IV05 equals 2 or IV06 equals 2 or IV07 equals 2
CC0534     or IV08 equals 2 or IV09 equals 2.

HH1271  2  ******* THIS CASE SHOWS EJECTION WITH RESTRAINT USEAGE. ******
HH1272     ******  CHECK YOUR DATA AND IF CORRECT, NOTIFY YOUR ZONE ******
HH1273     EJECTION OA12 is equal to 1-3 and (MANUAL BELT USE OA18 does not
HH1274     equal 00 or AIR BAG DEPLOYMENT OA22 does not equal 0
HH1275     or AUTOMATIC BELT USE OA45 does not equal 0).

09504A00000011[redacted]925.0110000000000207560010001[redacted]92[redacted]92        [redacted]92010191000
000000000000000
09504A00010012[redacted]925.0110000000000101R0215F
09504A01000021       5.01 0000000009249032042T1AE97A4NC1[redacted]19900055996610101023
00010000074345247-22-412461111
09504A01000022       5.01 00000000000207070707070707[redacted]90000000011299
09504A01000031       5.01 000000000010202RZAW08              099104446443900-002
                 0109570001
09504A01000041       5.01 00000100098233305000026666686000000001222220212222101
09504A01000042       5.01 00000000012104312134312064313104313064322104322074323 10
432307431313431             204003080
09504A01010051       5.01 00000100031264154111923420303110004401600000000000004100
062019900003911111101101
09504A01010161       5.01 0000000001HRFS2792100
09504A01010261       5.01 0000000001HIFS3732100
09504A01010361       5.01 0000000001HIFS3732100
09504A01010461       5.01 0000000001FIFS2732100
09504A01010561       5.01 0000000001FRFS1732100
09504A01010661       5.01 0000000001FCFS1733100
09504A01010761       5.01 0000000001CBFS4301101
09504A01010861       5.01 0000000001CCFS2301101
09504A01010961       5.01 0000000001ARFS2301101
09504A01011061       5.01 0000000001ALFS2202100
09504A01011161       5.01 0000000001WLDJ3043100
09504A01011261       5.01 0000000001HWUB3732100
09504A01011361       5.01 0000000001HILB4331107
09504A01011461       5.01 0000000001HICB3331107
09504A01011561       5.01 0000000001HSLB4331107
09504A01011661       5.01 0000000001HILB6331107
09504A01011761       5.01 0000000001CCEA6301101
09504A01011861       5.01 0000000001CCLH5301101
09504A01011961       5.01 0000000001CRLP2301101
09504A01012061       5.01 0000000001CLLP2301101
09504A01012161       5.01 0000000001CRCP3301101
09504A01012261       5.01 0000000001MLLQ2302101
09504A01012361       5.01 0000000001MRLL4302101
09504A01012461       5.01 0000000001MRCK2302101
09504A01012561       5.01 0000000001MRLK2302101
09504A01012661       5.01 0000000001MILG2302101
09504A01012761       5.01 0000000001HSCI2533102
09504A01012861       5.01 0000000001FRCO1731100
09504A01012961       5.01 0000000001FLAI2413100
09504A01013061       5.01 0000000001ARLI1302101
09504A01013161       5.01 0000000001ALAI1413100
09504A01013261       5.01 0000000001ARAI1302101
09504A01013361       5.01 0000000001MRAI1312101
09504A01013461       5.01 0000000001YRCI2302101
09504A01013561       5.01 0000000001YRAI1572100
09504A01013661       5.01 0000000001TRLI1312101
09504A01013761       5.01 0000000001TLCI1212100
09504A01013861       5.01 0000000001NLAI1413100
09504A01013961       5.01 0000000001TRCI1312101
09504A02000021       5.01 0000000009220471301GCCS14A1N81[redacted]19909655036610101027
02010000345074237-36+081081110
```

09504A02000022 5.01 0000000000000000000000000000[redacted]1000000000016221
09504A02000031 5.01 000000000010111FDEW04 060111317192233 000
0110830001
09504A02000041 5.01 0000000001133000000002608868800000000120002001200010 0
09504A02000042 5.01 0000000001305321205329825221304221203221102221117231127
231105121306131 307005180
09504A02010051 5.01 0000000002217217511110000040411000430510000000000003310
4400000000005000001029 01
09504A02010161 5.01 0000000007QRFS2591100
09504A02010261 5.01 0000000007WLLI1092106
09504A02010361 5.01 0000000007CCCI1411100
09504A02010461 5.01 0000000007SLCI1411100
09504A02010561 5.01 0000000007FILI1042100
09504A888888880714925.011000000000YY0202YYY0101Y0000000000000000000000000000000000
00000000
09504A999999990714925.0110000000000000000000000000000000000000000000100000000200000
00000000000000

BEST AVAILABLE

1992 NATIONAL ACCIDENT SAMPLING SYSTEM

BEST AVAILABLE

ERROR SUMMARY SCREEN

[redacted], 1992

CURRENT VERSION: 5.01

FORM NAME	NUMBER OF DOLLAR SIGNS	NUMBER OF LEVEL 1 ERRORS	NUMBER OF LEVEL 2 ERRORS	VERSION NUMBER CONSISTENT
Accident	0	0	0	Y
General Vehicle	0	0	0	Y
Vehicle Exterior	0	0	0	Y
Vehicle Interior	0	0	1	Y
Occupant Assessment	0	0	1	Y
Occupant Injury	0	0	0	Y
Total Inter Errors		0	0	
Total Case Errors	0	0	2	

U.S. Department of Transportation
National Highway Traffic Safety Administration

SLIDE INDEX

NATIONAL ACCIDENT SAMPLING SYSTEM
CRASHWORTHINESS DATA SYSTEM

Primary Sampling Unit Number 09 Case Number—Stratum 504A

Slide No.	Vehicle No.	Direction of Picture	Description of Slide Subject Matter
1-7	1	S	APPROACH
8-10		E	POST-IMPACT TRAJECTORY
11, 12		W	LOOKBACK FROM FRP TO POI
13-16		N	LOOKBACK FROM POI TO APPROACH
17-21	2	N	APPROACH TO POI
22-24		N	POI TO FRP
25, 26		S	LOOKBACK FROM FRP TO POI
27		S	LOOKBACK FROM POI
28		W	VIEW OF FRP
29-51	1	EXTERIOR	
36			VIEW DOWN (L) SIDE OF VEHICLE
52-71		INTERIOR	
55			CONSOLE
60			LOOKING FORWARD FROM BACKLIGHT
64			RF SEAT CUSHION
66, 67			LF DOOR LATCH & STRIKER
69			RR DOOR INTRUSION UA TO LR DOOR
72-91	2	EXTERIOR	
92-108		INTERIOR	
109			CARGO BED W/BACKLIGHT FRAME

HS Form 434B (1/92)

Slide No.	Vehicle No.	Direction of Picture	Description of Slide Subject Matter

PSU 09-504A (1992) #1

PSU 09-504A (1992) #2

PSU 09-504A (1992) #3

PSU 09-504A (1992) #4

PSU 09-504A (1992) #5

PSU 09-504A (1992) #6

PSU 09-504A (1992) #7

PSU 09-504A (1992) #8

PSU 09-504A (1992) #9

PSU 09-504A (1992) #10

PSU 09-504A (1992) #11

PSU 09-504A (1992) #12

PSU 09-504A (1992) #13

PSU 09-504A (1992) #14

PSU 09-504A (1992) #15

PSU 09-504A (1992) #16

PSU 09-504A (1992) #17

PSU 09-504A (1992) #18

PSU 09-504A (1992) #19

PSU 09-504A (1992) #20

PSU 09-504A (1992) #21

PSU 09-504A (1992) #22

PSU 09-504A (1992) #23

PSU 09-504A (1992) #24

PSU 09-504A (1992) #25

PSU 09-504A (1992) #26

PSU 09-504A (1992) #27

PSU 09-504A (1992) #28

PSU 09-504A (1992) #29

PSU 09-504A (1992) #30

PSU 09-504A (1992) #31

PSU 09-504A (1992) #32

PSU 09-504A (1992) #33

PSU 09-504A (1992) #34

PSU 09-504A (1992) #35

PSU 09-504A (1992) #36

PSU 09-504A (1992) #37

PSU 09-504A (1992) #38

PSU 09-504A (1992) #39

PSU 09-504A (1992) #40

PSU 09-504A (1992) #41

PSU 09-504A (1992) #42

PSU 09-504A (1992) #43

PSU 09-504A (1992) #44

PSU 09-504A (1992) #45

PSU 09-504A (1992) #46

PSU 09-504A (1992) #47

PSU 09-504A (1992) #48

PSU 09-504A (1992) #49

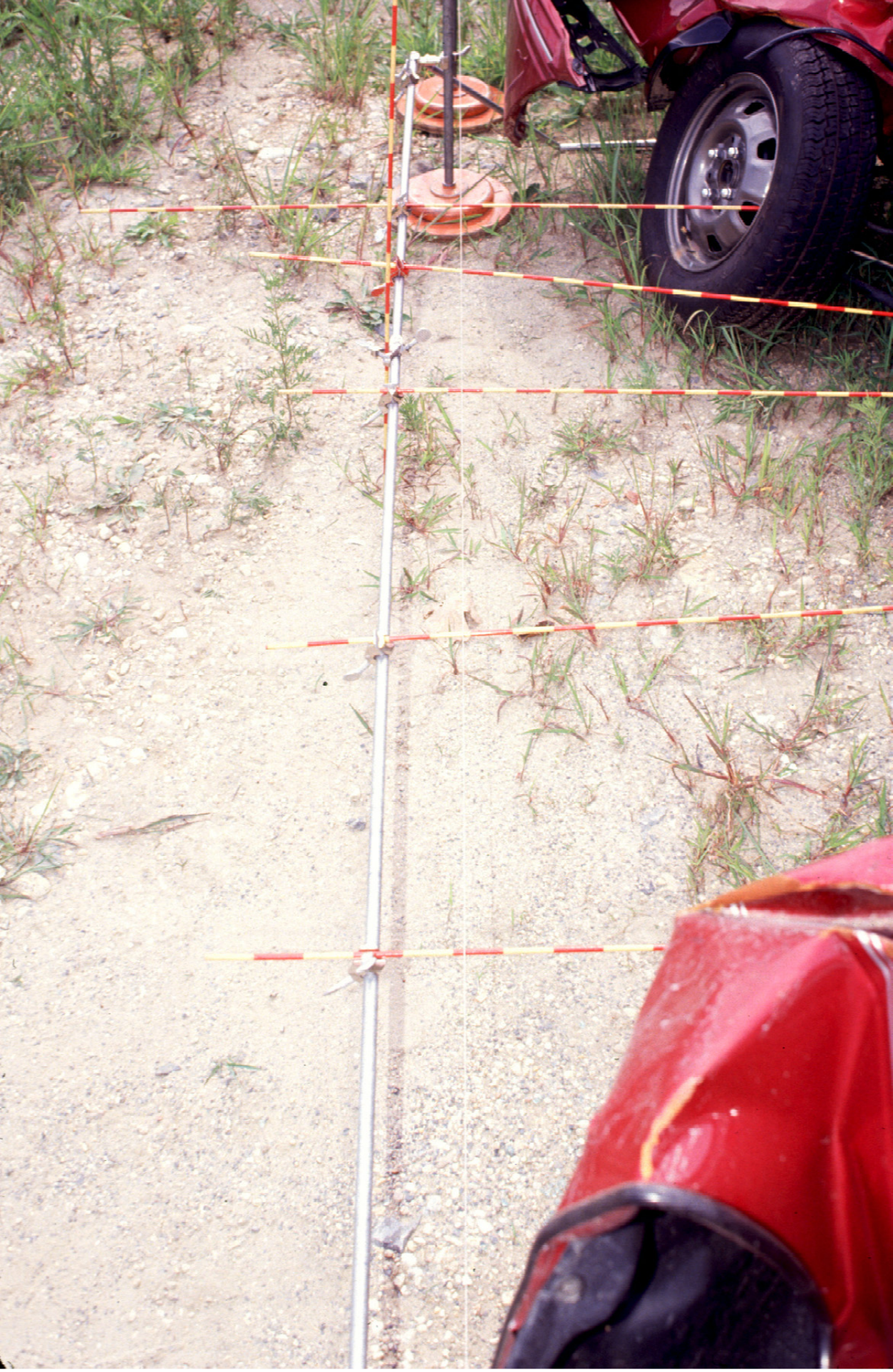

PSU 09-504A (1992) #50

PSU 09-504A (1992) #51

PSU 09-504A (1992) #52

PSU 09-504A (1992) #53

PSU 09-504A (1992) #54

PSU 09-504A (1992) #55

PSU 09-504A (1992) #56

PSU 09-504A (1992) #57

PSU 09-504A (1992) #58

PSU 09-504A (1992) #59

PSU 09-504A (1992) #60

PSU 09-504A (1992) #61

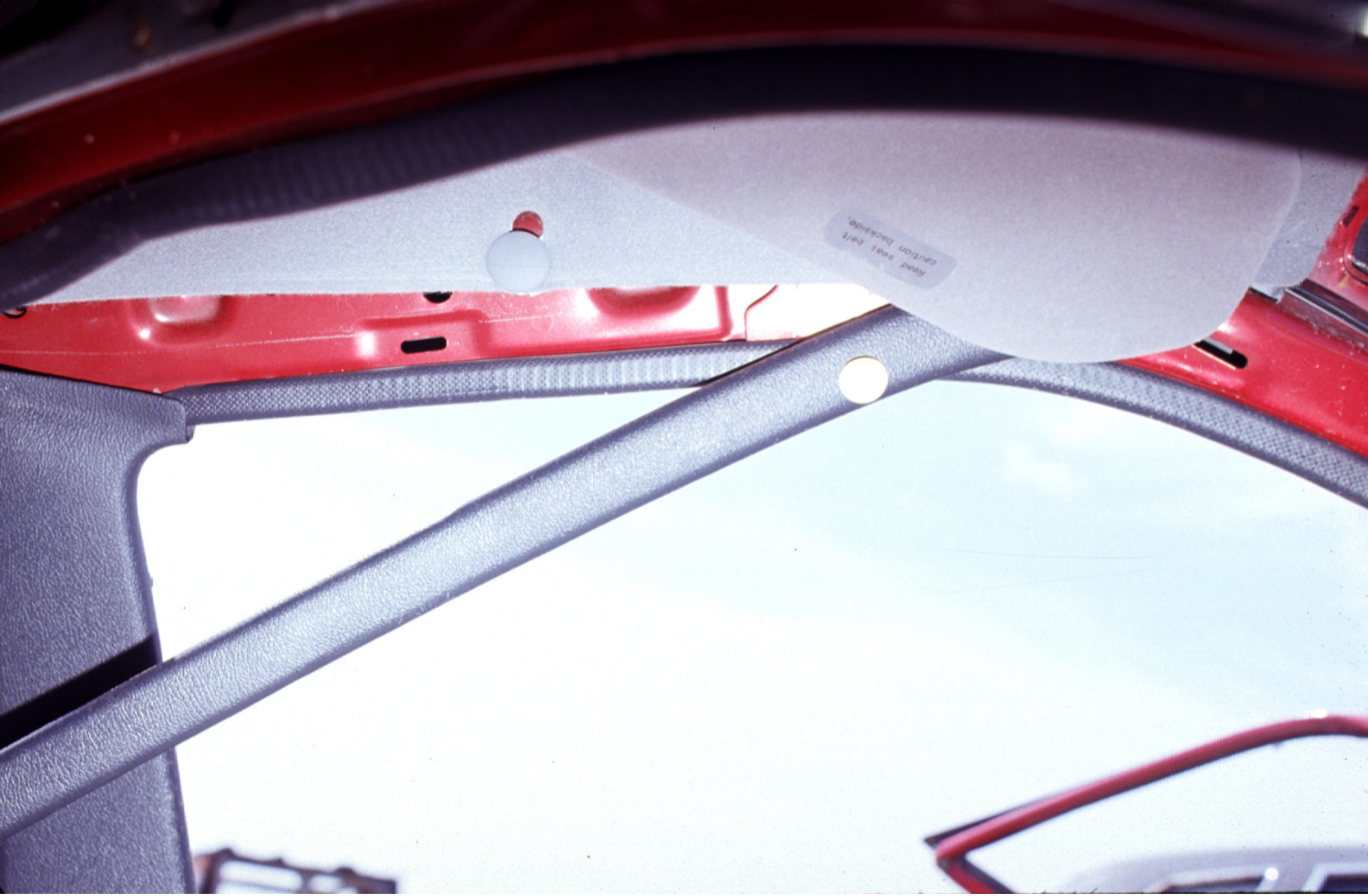

PSU 09-504A (1992) #62

PSU 09-504A (1992) #63

PSU 09-504A (1992) #64

PSU 09-504A (1992) #65

PSU 09-504A (1992) #66

PSU 09-504A (1992) #67

PSU 09-504A (1992) #68

PSU 09-504A (1992) #69

PSU 09-504A (1992) #70

PSU 09-504A (1992) #71

PSU 09-504A (1992) #72

PSU 09-504A (1992) #73

PSU 09-504A (1992) #74

PSU 09-504A (1992) #75

PSU 09-504A (1992) #76

PSU 09-504A (1992) #77

PSU 09-504A (1992) #78

PSU 09-504A (1992) #79

PSU 09-504A (1992) #80

PSU 09-504A (1992) #81

PSU 09-504A (1992) #82

PSU 09-504A (1992) #83

PSU 09-504A (1992) #84

PSU 09-504A (1992) #85

PSU 09-504A (1992) #86

PSU 09-504A (1992) #87

PSU 09-504A (1992) #88

PSU 09-504A (1992) #89

PSU 09-504A (1992) #90

PSU 09-504A (1992) #91

PSU 09-504A (1992) #92

PSU 09-504A (1992) #93

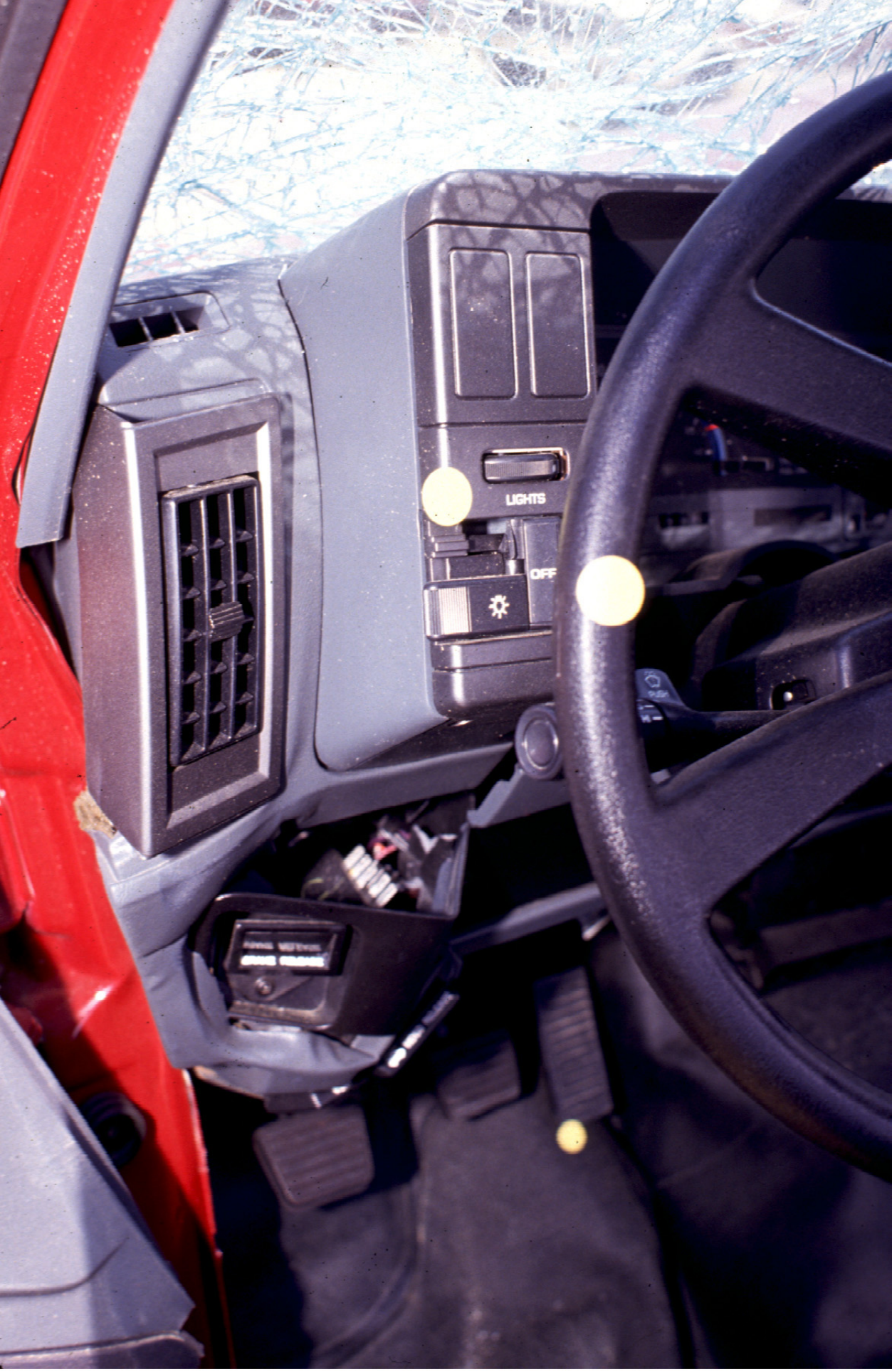

PSU 09-504A (1992) #94

PSU 09-504A (1992) #95

PSU 09-504A (1992) #96

PSU 09-504A (1992) #97

PSU 09-504A (1992) #98

PSU 09-504A (1992) #99

PSU 09-504A (1992) #100

PSU 09-504A (1992) #101

PSU 09-504A (1992) #102

PSU 09-504A (1992) #103

PSU 09-504A (1992) #104

PSU 09-504A (1992) #105

PSU 09-504A (1992) #106

PSU 09-504A (1992) #107

PSU 09-504A (1992) #108

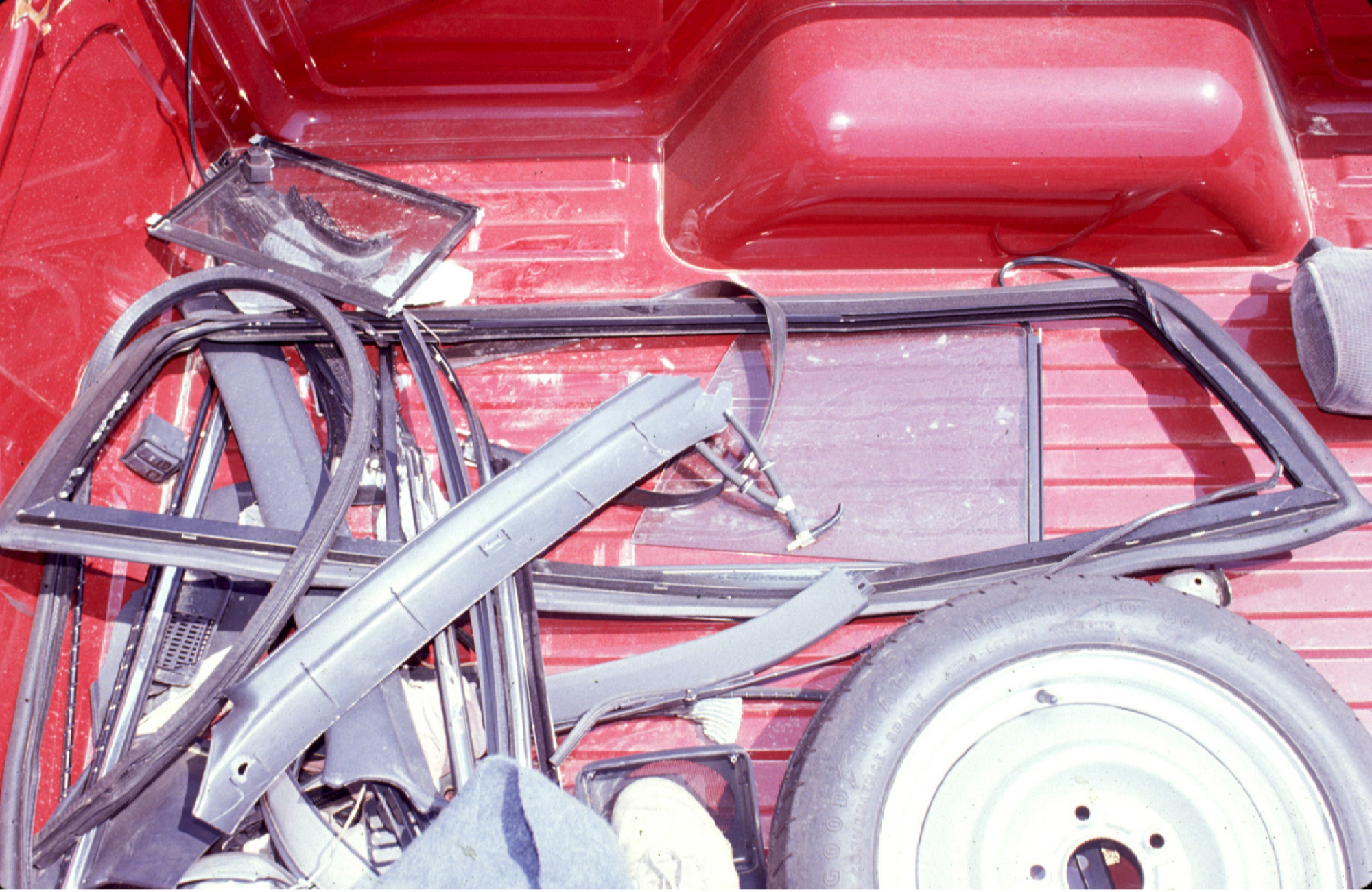

PSU 09-504A (1992) #109