U.S. Department
of Transportation

**National Highway
Traffic Safety
Administration**

400 Seventh Street, S.W.
Washington, D.C. 20590

Dear Crash Data Researchers/Users:

Thank you for choosing crash data from the National Highway Traffic Safety Administration (NHTSA) for your research or other use. The information contained in this motor vehicle crash report is collected, maintained and distributed in accordance with Public Law 89-564. In accordance with this Public Law, NHTSA is required not to release any case information until completion of quality control procedures. These procedures include a review of the case material to extract all names, licenses and registration numbers, non-coded interview material, non-research related researcher comments in the margins, non-factual data, and the production number portion of the vehicle identification number (VIN).

If you requested NHTSA to query its database files in order to identify a specific crash, then that query was made using non-personal descriptors you provided for use in our search. This motor vehicle crash may have been identified from a data search and matches the general, non-personal descriptors you provided, but we cannot confirm that this is the specific crash report you requested.

If you have any questions with regard to the above procedures, please contact the Field Operations Branch, Crash Investigation Division, National Center for Statistics and Analysis at 202-366-4820. Again, please be advised that we cannot confirm that this is the case that you have specifically requested nor can we certify the information to be correct.

*** *** ***

Get it together!
SAFETY BELTS SAVE LIVES

AUTO SAFETY HOTLINE
(800) 424-9393
Wash. D.C. Area 366-0123

U.S. Department of Transportation
National Highway Traffic Safety Administration

CASE SUMMARY

NATIONAL ACCIDENT SAMPLING SYSTEM
CRASHWORTHINESS DATA SYSTEM

PSU 05 CASE NO. 023E TYPE OF ACCIDENT CAr/car right angle with rollover

A. DESCRIPTION OF THE ACCIDENT SEQUENCE AND ACCIDENT PECULIARITIES

(Provide a summary of the accident sequence as well as any particular event of the accident that is noteworthy. Injury mechanism and vehicle crashworthiness is the focus, not driver culpability. Do not include any personal identifiers.)

V1 was travelling eastbound. V2 was travelling southbound. As V2 entered the intersection, it was impacted by the front of V1. After impact V2 rotated clockwise and rolled over (unknown amount of time) and came back on its four wheels V2 then travelled north after rollover. The pedal of V2 was checked but it was not stuck. During rollover sequence the driver foot must of been caught on gas pedal.

B. VEHICLE PROFILE(S)

Vehicle No.	Class of Vehicle	Year/Make/Model	Most Severe Damage Based on Vehicle Inspection		Component Failure
			Damage Plane	Severity Description	
1	Intermediate	93 Ford TAuras	Frontal	Light	None
2	Subcompact	91 Hyundai Excel	Right	Moderate	None

DO NOT SANITIZE THIS FORM

C. PERSON PROFILE(S)

Vehicle No.	Person Role	Seat Position	Restraint Use	Most Severe Injury (TO BE COMPLETED BY ZONE CENTER)			
				Body Region	Injury Type	AIS	Injury Source
1	Driver	Left front	None	head	contusion	1	steering rim
1	Passenger	Right back	Child safety seat	not injured			
2	Driver	Left front	~~None~~ L&S	NECK	strain	1	impact force

Body Region

Abdomen
Ankle—foot
Arm (upper)
Back-thoracolumbar spine
Chest
Elbow
Face
Forearm
Head—skull
Knee
Leg (lower)
Lower limbs(s) (whole or unknown part)
Neck—cervical spine
Pelvic—hip
Shoulder
Thigh
Upper limb(s) (whole or unknown part)
Whole body
Wrist—hand
Brain
Ears
Eye
Heart
Kidneys
Liver
Mouth
Noise
Pulmonary—lungs
Spleen
Thyroid, other endocrine gland
Vertebrae

Injury Type

Abrasion
Amputation
Avulsion
Burn
Concussion
Contusion
Crush
Detachment, separation
Dislocation
Fracture
Fracture and dislocation
Laceration
Other
Perforation, puncture
Rupture
Sprain
Strain
Total severance, transection
Unknown

Abbreviated Injury Scale

(1) Minor injury
(2) Moderate injury
(3) Serious injury
(4) Severe injury
(5) Critical injury
(6) Maximum (untreatable)
(7) Injured, unknown severity

DO NOT SANITIZE THIS FORM

U.S. Department of Transportation

National Highway Traffic Safety Administration

ACCIDENT COLLISION DIAGRAM

NATIONAL ACCIDENT SAMPLING SYSTEM
CRASHWORTHINESS DATA SYSTEM

PSU No. 05 Case ~~Number Stratum~~ 02 3E

Indicate North

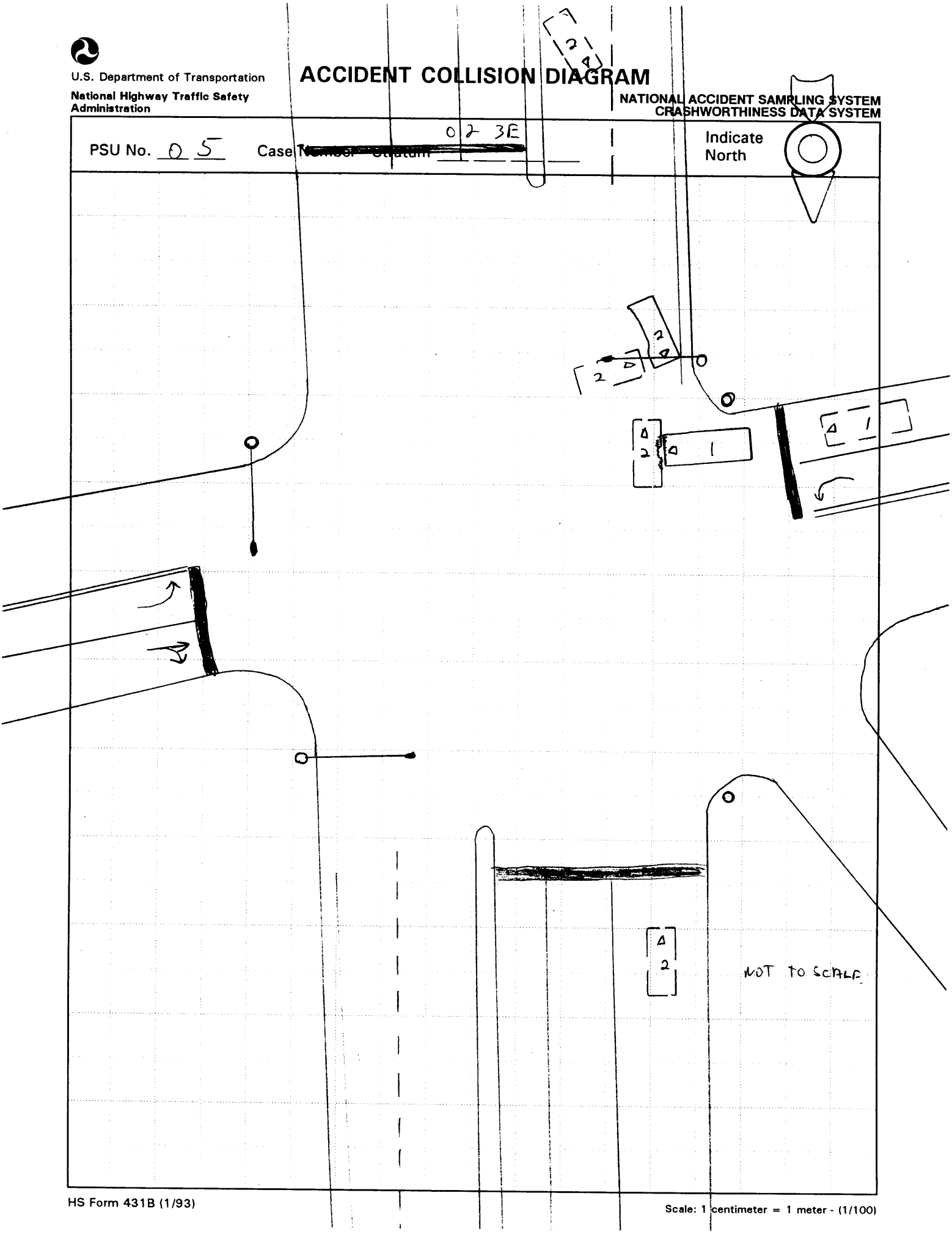

HS Form 431B (1/93)

Scale: 1 centimeter = 1 meter - (1/100)

U.S. Department of Transportation

National Highway Traffic Safety Administration

ACCIDENT COLLISION MEASUREMENT TABLE

NATIONAL ACCIDENT SAMPLING SYSTEM
CRASHWORTHINESS DATA SYSTEM

Primary Sampling Unit Number 05 Case Number—Stratum 023 F

ACCIDENT COLLISION DIAGRAM

LEVEL I
PHYSICAL EVIDENCE ABSENT

To be accomplished when there is no physical evidence present at the scene:

* approximate vehicle orientation at impact and final rest
* applicable road/roadway delineation (e.g., curbs/edge lines, lane markings, median markings, pavement markings, etc.)
* applicable traffic controls (e.g., speed limit)
* north arrow placed on diagram
* sketch required

LEVEL II
PHYSICAL EVIDENCE PRESENT

In addition to the level I tasks noted above, the following must be accomplished when

LEVEL II (Cont'd)

physical evidence is present:

* document reference point and reference line relative to physical features present at the scene
* scale documentation of all accident induced physical evidence
* scaled documentation of all roadside objects contacted
* roadway surface type and condition of applicable roadways
* grade measurements for all applicable roadways and at location of rollover initiation
* scaled representations of the vehicle(s) at pre-impact, impact, and final rest based upon either:
  - a) physical evidence, or
  - b) reconstructed accident dynamics

CRASH DATA

	VEH. #1	VEH. #2	VEH. #3
Heading Angle			
Surface Type			
Surface Condition			
Grade (v/h) Measurement (between impact and final rest)			
Grade (v/h) Measurement (at location of rollover initiation)			

Reference Point: Level 1 Reference line: —

Item	Distance and Direction from Reference Point	Distance and Direction from Reference Line
Level 1		

HS Form 431A (1/93)

Item	Distance and Direction from Reference Point	Distance and Direction from Reference Line

U.S. Department of Transportation
National Highway Traffic Safety Administration

ACCIDENT FORM

NATIONAL ACCIDENT SAMPLING SYSTEM
CRASHWORTHINESS DATA SYSTEM

1. Primary Sampling Unit Number 05
2. Case Number - Stratum 023F

IDENTIFICATION

3. Number of General Vehicle Forms Submitted 02
4. Date of Accident (Month,Day,Year) 9 3
5. Time of Accident 1154

Code reported military time of accident.

NOTE: Midnight = 2400
Unknown = 9999

SPECIAL STUDIES - INDICATORS

Check (✓) each special study (SS14-SS18 below) that has been completed; code 1 for the checked special studies and 0 for the special studies not checked.

6. ___SS14 Fatal AOPS 0
7. ___SS15 Administrative Use 0
8. ___SS16 _____ 0
9. ___SS17 _____ 0
10. ___SS18 _____ 0

NUMBER OF EVENTS

11. Number of Recorded Events in This Accident 02

Code the number of events which occurred in this accident.

ACCIDENT EVENTS

For each event that occurred in the accident, code the lowest numbered vehicle in the left columns and the other involved vehicle or object on the right.

Accident Event Sequence Number	Vehicle Number	Class Of Vehicle	General Area of Damage	Vehicle Number or Object Contacted	Class Of Vehicle	General Area of Damage
12. 01	13. 01	14. 03	15. F	16. 02	17. 01	18. R
19. 02	20. 02	21. 01	22. ~~K~~ T	23. 31	24. 00	25. N
26. 03	27.	28.	29.	30.	31.	32.
33. 04	34.	35.	36.	37.	38.	39.
40. 05	41.	42.	43.	44.	45.	46.

NASS CODING CH
1st Review: IA
2nd Review:

IF GREATER THAN FIVE EVENTS, CONTINUE CODING ON THE ACCIDENT EVENT SUPPLEMENT

HS Form 434 (Rev. 1/93)

CODES FOR CLASS OF VEHICLE

(00) Not a motor vehicle
(01) Subcompact/mini (wheelbase < 254 cm)
(02) Compact (wheelbase ≥ 254 but < 265 cm)
(03) Intermediate (wheelbase ≥ 265 but < 278 cm)
(04) Full size (wheelbase ≥ 278 but < 291 cm)
(05) Largest (wheelbase ≥ 291 cm)
(09) Unknown passenger car size
(11) Compact utility vehicle
(12) Large utility vehicle (≤ 4,500 kgs GVWR)
(13) Passenger van (≤ 4,500 kgs GVWR)
(14) Other van (≤ 4,500 kgs GVWR)
(15) Pickup truck (≤ 4,500 kgs GVWR)
(18) Other truck (≤ 4,500 kgs GVWR)
(19) Unknown light truck type
(20) School bus
(21) Other bus
(22) Truck (> 4,500 kgs GVWR)
(23) Tractor without trailer
(24) Tractor-trailer(s)
(25) Motored cycle
(28) Other vehicle
(99) Unknown

CODES FOR GENERAL AREA OF DAMAGE (GAD)

CDS APPLICABLE AND OTHER VEHICLES

(0) Not a motor vehicle
(N) Noncollision
(F) Front
(R) Right side
(L) Left side
(B) Back
(T) Top
(U) Undercarriage
(9) Unknown

TDC APPLICABLE VEHICLES

(0) Not a motor vehicle
(N) Noncollision
(F) Front
(R) Right side
(L) Left side
(B) Back of unit with cargo area (rear of trailer or straight truck)
(D) Back (rear of tractor)
(C) Rear of cab
(V) Front of cargo area
(T) Top
(U) Undercarriage
(9) Unknown

CODES FOR VEHICLE NUMBER OR OBJECT CONTACTED

(01-30) — Vehicle Number

Noncollision
(31) Overturn — rollover
(32) Fire or explosion
(33) Jackknife
(34) Other intraunit damage (specify): _____
(35) Noncollision injury
(38) Other noncollision (specify): _____
(39) Noncollision — details unknown

Collision With Fixed Object
(41) Tree (≤ 10 cm in diameter)
(42) Tree (> 10 cm in diameter)
(43) Shrubbery or bush
(44) Embankment
(45) Breakaway pole or post (any diameter)

Nonbreakaway Pole or Post
(50) Pole or post (≤ 10 cm in diameter)
(51) Pole or post (> 10 cm but ≤ 30 cm in diameter)
(52) Pole or post (> 30 cm in diameter)
(53) Pole or post (diameter unknown)
(54) Concrete traffic barrier
(55) Impact attenuator
(56) Other traffic barrier (includes guardrail) (specify): _____
(57) Fence
(58) Wall
(59) Building
(60) Ditch or culvert
(61) Ground
(62) Fire hydrant
(63) Curb
(64) Bridge
(68) Other fixed object (specify): _____
(69) Unknown fixed object

Collision with Nonfixed Object
(71) Motor vehicle not in-transport
(72) Pedestrian
(73) Cyclist or cycle
(74) Other nonmotorist or conveyance _____
(75) Vehicle occupant
(76) Animal
(77) Train
(78) Trailer, disconnected in transport
(88) Other nonfixed object (specify): _____
(89) Unknown nonfixed object

(98) Other event (specify): _____
(99) Unknown event or object

OCCUPANT RELATED

16. Driver Presence in Vehicle 1
    (0) Driver not present
    (1) Driver present
    (9) Unknown

17. Number of Occupants This Vehicle 0 2
    (00-96) Code actual number of occupants for this vehicle
    (97) 97 or more
    (99) Unknown

18. Number of Occupant Forms Submitted 0 2

VEHICLE WEIGHT ITEMS

19. Vehicle Curb Weight 1,4 0 0
    1399 Code weight to nearest 10 kilograms.
    (045) Less than 450 kilograms
    (610) 6,100 kilograms or more
    (999) Unknown

    ___,___ ___ lbs X .4536 = ___,___ ___ kgs

    Source: _____

20. Vehicle Cargo Weight 0, 0 0 0
    ____ Code weight to nearest 10 kilograms.
    (000) Less than 5 kilograms
    (450) 4,500 kilograms or more
    (999) Unknown

    ___,___ ___ lbs X .4536 = ___,___ ___ kgs

RECONSTRUCTION DATA

21. Towed Trailing Unit 0
    (0) No towed unit
    (1) Yes—towed trailing unit
    (9) Unknown

22. Documentation of Trajectory Data for This Vehicle 0
    (0) No
    (1) Yes

23. Post Collision Condition of Tree or Pole (For Highest Delta V) 0
    (0) Not collision (for highest delta V) with tree or pole
    (1) Not damaged
    (2) Cracked/sheared
    (3) Tilted <45 degrees
    (4) Tilted ≥45 degrees
    (5) Uprooted tree
    (6) Separated pole from base
    (7) Pole replaced
    (8) Other (specify): _____
    (9) Unknown

24. Rollover 0
    (0) No rollover (no overturning)

    Rollover (primarily about the longitudinal axis)
    (1) Rollover, 1 quarter turn only
    (2) Rollover, 2 quarter turns
    (3) Rollover, 3 quarter turns
    (4) Rollover, 4 or more quarter turns (specify): _____

    (5) Rollover--end-over-end (i.e., primarily about the lateral axis)
    (9) Rollover (overturn), details unknown

OVERRIDE/UNDERRIDE (THIS VEHICLE)

25. Front Override/Underride (this Vehicle) 0

26. Rear Override/Underride (this Vehicle) 0

    (0) No override/underride, or not an end-to-end impact

    Override (see specific CDC)
    (1) 1st CDC
    (2) 2nd CDC
    (3) Other not automated CDC (specify): _____

    Underride (see specific CDC)
    (4) 1st CDC
    (5) 2nd CDC
    (6) Other not automated CDC (specify): _____

    (7) Medium/heavy truck or bus override
    (9) Unknown

HEADING ANGLE AT IMPACT FOR HIGHEST DELTA V

Values: (000)-(359) Code actual value
(997) Noncollision
(998) Impact with object
(999) Unknown

27. Heading Angle For This Vehicle 0 9 0

28. Heading Angle For Other Vehicle 1 8 0

OTHER DATA

56. Driver's Zip Code ___ ___ ___ ___ ___

(00000) Driver not present
(00001) Driver not a resident of U.S. or territories
_____ Code actual 5-digit zip code
(99999) Unknown

57. Driver's Race/Ethnic Origin 1
(0) Driver not present
(1) White (non-Hispanic)
(2) Black (non-Hispanic)
(3) White (Hispanic)
(4) Black (Hispanic)
(5) American Indian, Eskimo or Aleut
(6) Asian or Pacific Islander
(8) Other (specify): _____
(9) Unknown

58. Vehicle Special Use (This Trip) 0
(0) No special use
(1) Taxi
(2) Vehicle used as school bus
(3) Vehicle used as other bus
(4) Military
(5) Police
(6) Ambulance
(7) Fire truck or car
(8) Other (specify): _____
(9) Unknown

ROLLOVER DATA

If GV07 (Body Type) ≠ 1-49, leave GV59-GV63 blank.
If GV24 (Rollover) = 0, then GV59-GV63 must equal 0.
If GV24 = 9, then GV59-GV63 must equal 9.

59. Rollover Initiation Type 0
(0) No rollover
(1) Trip-over
(2) Flip-over
(3) Turn-over
(4) Climb-over
(5) Fall-over
(6) Bounce-over
(7) Collision with another vehicle
(8) Other rollover initiation type specify): _____
(9) Unknown rollover initiation type

60. Location of Rollover Initiation 0
(0) No rollover
(1) On roadway
(2) On shoulder—paved
(3) On shoulder—unpaved
(4) On roadside or divided trafficway median
(9) Unknown

61. Rollover Initiation Object Contacted 00

62. Location on Vehicle Where Initial Principal Tripping Force Is Applied 0
(0) No rollover
(1) Wheels/tires
(2) Side plane
(3) End plane
(4) Undercarriage
(5) Other location on vehicle (specify): _____
(8) Non-contact rollover forces (specify): _____
(9) Unknown

63. Direction of Initial Roll 0
(0) No rollover
(1) Roll right - primarily about the longitudinal axis
(2) Roll left - primarily about the longitudinal axis
(5) End-over-end (i.e., primarily about the lateral axis)
(9) Unknown roll direction

PRECRASH DATA

64. Pre-Event Movement (Prior to Recognition of Critical Event) 03
(01) Going straight
(02) Slowing or stopping in traffic lane
(03) Starting in traffic lane
(04) Stopped in traffic lane
(05) Passing or overtaking another vehicle
(06) Disabled or parked in travel lane
(07) Leaving a parking position
(08) Entering a parking position
(09) Turning right
(10) Turning left
(11) Making a U-turn
(12) Backing up (other than for parking position)
(13) Negotiating a curve
(14) Changing lanes
(15) Merging
(16) Successful avoidance maneuver to a previous critical event
(97) Other (specify): _____
(98) No driver present
(99) Unknown

PSU, 05-023E
V-01

CODES FOR ROLLOVER INITIATION OBJECT CONTACTED

(00) No rollover
(01-30) — Vehicle Number

Noncollision
(31) Turn-over — fall-over
(33) Jackknife

Collision With Fixed Object
(41) Tree (≤ 10 cm in diameter)
(42) Tree (> 10 cm in diameter)
(43) Shrubbery or bush
(44) Embankment

(45) Breakaway pole or post (any diameter)

Nonbreakaway Pole or Post
(50) Pole or post (≤ 10 cm in diameter)
(51) Pole or post (> 10 cm but ≤ 30 cm in diameter)
(52) Pole or post (> 30 cm in diameter)
(53) Pole or post (diameter unknown)

(54) Concrete traffic barrier
(55) Impact attenuator
(56) Other traffic barrier (includes guardrail) (specify):_____

(57) Fence
(58) Wall
(59) Building
(60) Ditch or culvert
(61) Ground
(62) Fire hydrant
(63) Curb
(64) Bridge
(68) Other fixed object (specify):

_____

(69) Unknown fixed object

Collision with Nonfixed Object
(71) Motor vehicle not in-transport
(76) Animal
(77) Train
(78) Trailer, disconnected in transport
(88) Other nonfixed object (specify):

_____

(89) Unknown nonfixed object

(98) Other event (specify):

_____

(99) Unknown event or object

U.S. Department of Transportation
National Highway Traffic Safety Administration

EXTERIOR VEHICLE FORM

NATIONAL ACCIDENT SAMPLING SYSTEM
CRASHWORTHINESS DATA SYSTEM

1. Primary Sampling Unit Number: 05
2. Case Number - Stratum: 023 E
3. Vehicle Number: 01

VEHICLE IDENTIFICATION

VIN: 1FALP52UXPA _____ Model Year: 93

Vehicle Make (specify): Ford Vehicle Model (specify): Taurus

LOCATOR

Locate the end of the damage with respect to the vehicle longitudinal center line or bumper corner for end impacts or an undamaged axle for side impacts.

Specific Impact No.	Location of Direct Damage	Location of Field L
1	Begins (R) Front Bumper Corner	SAME

CRUSH PROFILE IN CENTIMETERS

NOTES: Identify the plane at which the C-measurements are taken (e.g., at bumper, above bumper, at sill, above sill, etc.) and label adjustments (e.g., free space).

Measure and document on the vehicle diagram the location of maximum crush.

Measure C1 to C6 from driver to passenger side in front or rear impacts and rear to front in side impacts.

Free space value is defined as the distance between the baseline and the original body contour taken at the individual C locations. This may include the following: bumper lead, bumper taper, side protrusion, side taper, etc. Record the value for each C-measurement and maximum crush.

Use as many lines/columns as necessary to describe each damage profile.

Specific Impact Number	Plane of Impact C-Measurements	Direct Damage Width (CDC)	Direct Damage Max Crush	Field L	C_1	C_2	C_3	C_4	C_5	C_6	±D
1	Front Bumper	84		140	13.5	5	2	2.5	5	15	+137
	FREESPACE			28	-13	-3	-2	-2	-3	-13	
	X Resultant	84		140	.5	2	0	.5	2	2	+137

ORIGINAL SPECIFICATIONS WORK SHEET

Wheelbase	___ ___ ___.___	inches	x 2.54	=	___ ___ ___	cm
Overall Length	___ ___ ___.___	inches	x 2.54	=	___ ___ ___	cm
Maximum Width	___ ___ ___.___	inches	x 2.54	=	___ ___ ___	cm
Curb Weight	___ ___,___ ___ ___	pounds	x .4536	=	___,___ ___ ___	kg
Average Track	___ ___ ___.___	inches	x 2.54	=	___ ___ ___	cm
Front Overhang	___ ___ ___.___	inches	x 2.54	=	___ ___ ___	cm
Rear Overhang	___ ___ ___.___	inches	x 2.54	=	___ ___ ___	cm
Undeformed End Width	___ ___ ___.___	inches	x 2.54	=	___ ___ ___	cm
Engine Size: cyl./displ.	___ ___ ___ ___	cc	x .001	=	___.___	L
	___ ___ ___	CID	x .0164	=	___.___	L

VEHICLE DAMAGE SKETCH

TIRE—WHEEL DAMAGE

a. Rotation physically restricted		b. Tire deflated	
RF	2	RF	2
LF	2	LF	2
RR	2	RR	2
LR	2	LR	2

(1) Yes (2) No (8) NA (9) Unk.

TYPE OF TRANSMISSION

☐ Manual ☒ Automatic

ORIGINAL SPECIFICATIONS

Wheelbase	269	cm
Overall Length	488	cm
Maximum Width	181	cm
Curb Weight	1399	kg
Average Track	155	cm
Front Overhang	103	cm
Rear Overhang	116	cm
Undeformed End Width	158	cm
Engine Size: cyl./displ.	3.0	L

WHEEL STEER ANGLES

(For locked front wheels or displaced rear axles only)

RF ±	NA	NA	°
LF ±			°
RR ±			°
LR ±			°

Within ± 5 degrees

DRIVE WHEELS

☒ FWD ☐ RWD ☐ 4WD

Approximate Cargo Weight 00 kg

MEASUREMENTS IN CENTIMETERS

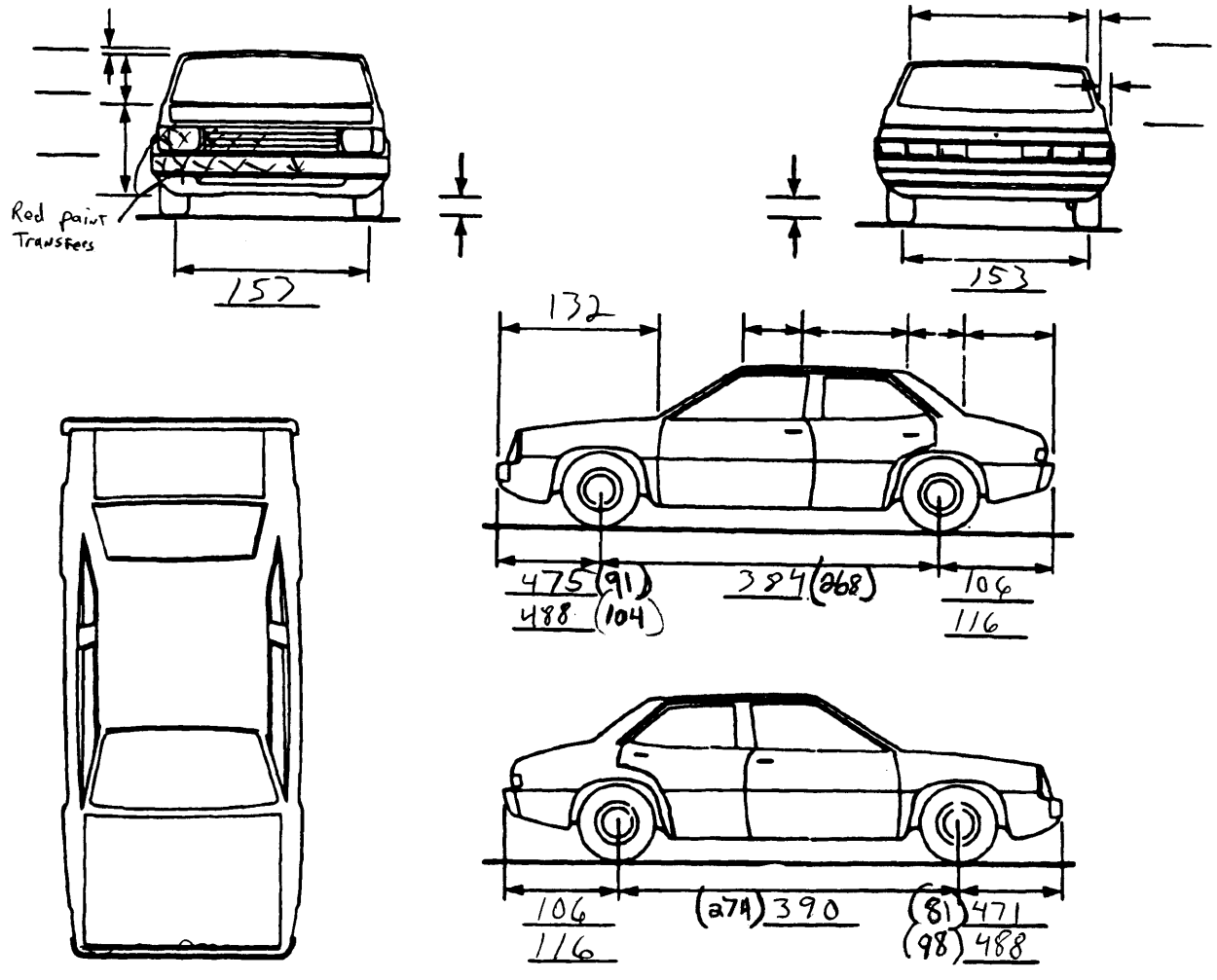

NOTES: Sketch new perimeter and cross hatch direct damage and single hatch induced damage on all views. Annotate observations which might be useful in reconstructing the accident (e.g., grass in tire bead, direction of striations, scuff on sidewalls, etc.). If pulling trailer, sketch type of trailer and damage received on the back of this page.

Annotate any damage caused by extrication such as component removal by torching, prying, or hydraulic shears.

CDC WORKSHEET

CODES FOR OBJECT CONTACTED

(01-30) — Vehicle Number

Noncollision
- (31) Overturn — rollover
- (32) Fire or explosion
- (33) Jackknife
- (34) Other intraunit damage (specify): _____
- (35) Noncollision injury
- (38) Other noncollision (specify): _____
- (39) Noncollision — details unknown

Collision With Fixed Object
- (41) Tree (≤ 10 cm in diameter)
- (42) Tree (> 10 cm in diameter)
- (43) Shrubbery or bush
- (44) Embankment
- (45) Breakaway pole or post (any diameter)

Nonbreakaway Pole or Post
- (50) Pole or post (≤ 10 cm in diameter)
- (51) Pole or post (> 10 cm but ≤ 30 cm in diameter)
- (52) Pole or post (> 30 cm in diameter)
- (53) Pole or post (diameter unknown)
- (54) Concrete traffic barrier
- (55) Impact attenuator
- (56) Other traffic barrier (includes guardrail) (specify): _____
- (57) Fence
- (58) Wall
- (59) Building
- (60) Ditch or culvert
- (61) Ground
- (62) Fire hydrant
- (63) Curb
- (64) Bridge
- (68) Other fixed object (specify): _____
- (69) Unknown fixed object

Collision with Nonfixed Object
- (71) Motor vehicle not in-transport
- (72) Pedestrian
- (73) Cyclist or cycle
- (74) Other nonmotorist or conveyance _____
- (75) Vehicle occupant
- (76) Animal
- (77) Train
- (78) Trailer, disconnected in transport
- (88) Other nonfixed object (specify): _____
- (89) Unknown nonfixed object
- (98) Other event (specify): _____
- (99) Unknown event or object

DEFORMATION CLASSIFICATION BY EVENT NUMBER

Accident Event Sequence Number	Object Contacted	(1) (2) Direction of Force (degrees)	Incremental Value of Shift	(3) Deformation Location	(4) Specific Longitudinal or Lateral Location	(5) Specific Vertical or Lateral Location	(6) Type of Damage Distribution	(7) Deformation Extent
01	02	-80	--	F	Z	E	W	01

U.S. Department of Transportation
National Highway Traffic Safety Administration

INTERIOR VEHICLE FORM

NATIONAL ACCIDENT SAMPLING SYSTEM
CRASHWORTHINESS DATA SYSTEM

1. Primary Sampling Unit Number 05
2. Case Number - Stratum 023 E
3. Vehicle Number 01

INTEGRITY

4. Passenger Compartment Integrity 00

(00) No integrity loss

Yes, Integrity Was Lost Through
(01) Windshield
(02) Door (side)
(03) Door/hatch (back door)
(04) Roof
(05) Roof glass
(06) Side window
(07) Rear window (backlight)
(08) Roof and roof glass
(09) Windshield and door (side)
(10) Windshield and roof
(11) Side and rear window (side window and backlight)
(12) Windshield and side window
(13) Door and side window
(98) Other combination of above (specify): _____
(99) Unknown

Door, Tailgate or Hatch Opening

5. LF 1 6. RF 1 7. LR 1 8. RR 1 9. TG/H 0

(0) No door/gate/hatch
(1) Door/gate/hatch remained closed and operational
(2) Door/gate/hatch came open during collision
(3) Door/gate/hatch jammed shut
(8) Other (specify): _____
(9) Unknown

Damage/Failure Associated with Door, Tailgate or Hatch Opening in Collision. If IV05-IV09 ≠ 2, Then code Ø

10. LF 0 11. RF 0 12. LR 0 13. RR 0 14. TG/H 0

(0) No door/gate/hatch or door not opened

Door, Tailgate or Hatch Came Open During Collision
(1) Door operational (no damage)
(2) Latch/striker failure due to damage
(3) Hinge failure due to damage
(4) Door structure failure due to damage
(5) Door support (i.e., pillar, sill, roof side rail, etc.) failure due to damage
(6) Latch/striker and hinge failure due to damage
(8) Other failure (specify): _____
(9) Unknown

GLAZING

Glazing Damage from Impact Forces

15. WS 0 16. LF 0 17. RF 0 18. LR 0 19. RR 0
20. BL 0 21. Roof 8 22. Other 0

(0) No glazing damage from impact forces
(2) Glazing in place and cracked from impact forces
(3) Glazing in place and holed from impact forces
(4) Glazing out-of-place (cracked or not) and not holed from impact forces
(5) Glazing out-of-place and holed from impact forces
(6) Glazing disintegrated from impact forces
(7) Glazing removed prior to accident
(8) No glazing
(9) Unknown if damaged

Glazing Damage from Occupant Contact

23. WS 0 24. LF 0 25. RF 0 26. LR 0 27. RR 0
28. BL 0 29. Roof 0 30. Other 0

(0) No occupant contact to glazing or no glazing
(1) Glazing contacted by occupant but no glazing damage
(2) Glazing in place and cracked by occupant contact
(3) Glazing in place and holed by occupant contact
(4) Glazing out-of-place (cracked or not) by occupant contact and not holed by occupant contact
(5) Glazing out-of-place by occupant contact and holed by occupant contact
(6) Glazing disintegrated by occupant contact
(9) Unknown if contacted by occupant

If No Glazing Damage *And* No Occupant Contact or No Glazing, Then Code IV31 Through IV46 As Ø

Type of Window/Windshield Glazing

31. WS 0 32. LF 0 33. RF 0 34. LR 0 35. RR 0
36. BL 0 37. Roof 0 38. Other 0

(0) No glazing contact and no damage, or no glazing
(1) AS-1 — Laminated
(2) AS-2 — Tempered
(3) AS-3 — Tempered-tinted
(4) AS-14 — Glass/Plastic
(8) Other (specify): _____
(9) Unknown

Window Precrash Glazing Status

39. WS 0 40. LF 0 41. RF 0 42. LR 0 43. RR 0
44. BL 0 45. Roof 0 46. Other 0

(0) No glazing contact and no damage, or no glazing
(1) Fixed
(2) Closed
(3) Partially opened
(4) Fully opened
(9) Unknown

INTRUSION WORKSHEET

Note: Sketch intruded areas

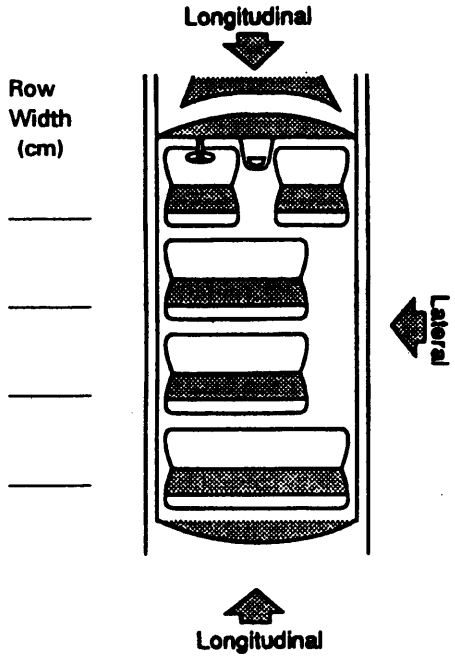

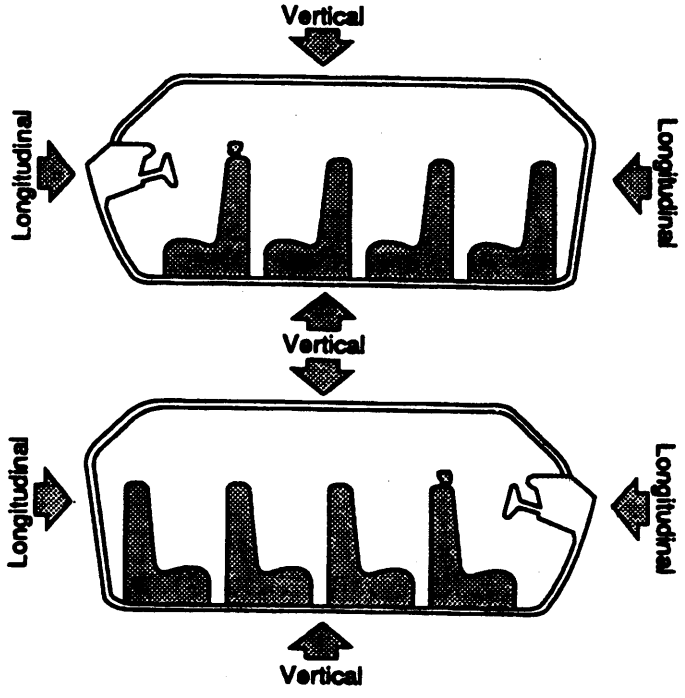

LOCATION OF INTRUSION	INTRUDED COMPONENT	(All Measurements Are In Centimeters) COMPARISON VALUE	—	INTRUDED VALUE	=	INTRUSION	DOMINANT CRUSH DIRECTION
			—		=		
			—		=		
			—		=		
			—		=		
			—		=		
			—		=		
			—		=		
			—		=		
			—		=		
			—		=		
			—		=		
			—		=		
			—		=		
			—		=		
			—		=		

Document no more than the 15 most severe intrusions

OCCUPANT AREA INTRUSION

Note: If no intrusions, leave variables IV47-IV86 blank.

	Location of Intrusion	Intruding Component	Magnitude of Intrusion	Dominant Crush Direction
1st	47.___ ___	48.___ ___	49.___	50.___
2nd	51.___ ___	52.___ ___	53.___	54.___
3rd	55.___ ___	56.___ ___	57.___	58.___
4th	59.___ ___	60.___ ___	61.___	62.___
5th	63.___ ___	64.___ ___	65.___	66.___
6th	67.___ ___	68.___ ___	69.___	70.___
7th	71.___ ___	72.___ ___	73.___	74.___
8th	75.___ ___	76.___ ___	77.___	78.___
9th	79.___ ___	80.___ ___	81.___	82.___
10th	83.___ ___	84.___ ___	85.___	86.___

LOCATION OF INTRUSION

Front Seat
- (11) Left
- (12) Middle
- (13) Right

Second Seat
- (21) Left
- (22) Middle
- (23) Right

Third Seat
- (31) Left
- (32) Middle
- (33) Right

Fourth Seat
- (41) Left
- (42) Middle
- (43) Right

- (97) Catastrophic
- (98) Other enclosed area (specify) _____
- (99) Unknown

INTRUDING COMPONENT

Interior Components
- (01) Steering assembly
- (02) Instrument panel left
- (03) Instrument panel center
- (04) Instrument panel right
- (05) Toe pan
- (06) A (A1/A2)-pillar
- (07) B-pillar
- (08) C-pillar
- (09) D-pillar
- (10) Door panel (side)
- (12) Roof (or convertible top)
- (13) Roof side rail
- (14) Windshield
- (15) Windshield header
- (16) Window frame
- (17) Floor pan (includes sill)
- (18) Backlight header
- (19) Front seat back
- (20) Second seat back
- (21) Third seat back
- (22) Fourth seat back
- (23) Fifth seat back
- (24) Seat cushion
- (25) Back door/panel (e.g., tailgate)
- (26) Other interior component (specify): _____
- (27) Side panel - forward of the A (A2)-pillar
- (28) Side panel - rear of the A (A2)-pillar

Exterior Components
- (30) Hood
- (31) Outside surface of this vehicle (specify): _____
- (32) Other exterior object in the environment (specify): _____
- (33) Unknown exterior object
- (97) Catastrophic
- (98) Intrusion of unlisted component(s) (specify): _____
- (99) Unknown

MAGNITUDE OF INTRUSION
- (1) ≥ 3 centimeters but < 8 centimeters
- (2) ≥ 8 centimeters but < 15 centimeters
- (3) ≥ 15 centimeters but < 30 centimeters
- (4) ≥ 30 centimeters but < 46 centimeters
- (5) ≥ 46 centimeters but < 61 centimeters
- (6) ≥ 61 centimeters
- (7) Catastrophic
- (9) Unknown

DOMINANT CRUSH DIRECTION
- (1) Vertical
- (2) Longitudinal
- (3) Lateral
- (7) Catastrophic
- (9) Unknown

STEERING RIM/SPOKE DEFORMATION

(All Measurements Are in Centimeters)

COMPARISON VALUE	—	DAMAGE VALUE	=	DEFORMATION
	—		=	
	—		=	
	—		=	
	—		=	

STEERING COLUMN

87. Steering Column Type 2
(1) Fixed column
(2) Tilt column
(3) Telescoping column
(4) Tilt and telescoping column
(8) Other column type (specify): _____
(9) Unknown

88. Blank X X
(This variable is left blank so that numbering consistency can be maintained with the 1988-93 CDS.

89. Blank X X X
(This variable is left blank so that numbering consistency can be maintained with the 1988-93 CDS.

90. Blank X X X
(This variable is left blank so that numbering consistency can be maintained with the 1988-93 CDS.

91. Blank X X X
(This variable is left blank so that numbering consistency can be maintained with the 1988-93 CDS.

92. Steering Rim/Spoke Deformation 0 0
____Code actual measured deformation to the nearest centimeter
(00) No steering rim deformation
(01-14) Actual measured value in centimeters
(15) 15 centimeters or more
(98) Observed deformation cannot be measured
(99) Unknown

93. Location of Steering Rim/Spoke Deformation 0 0
(00) No steering rim deformation

Quarter Sections
(01) Section A
(02) Section B
(03) Section C
(04) Section D

Half Sections
(05) Upper half of rim/spoke
(06) Lower half of rim/spoke
(07) Left half of rim/spoke
(08) Right half of rim/spoke

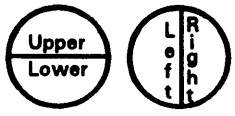

(09) Complete steering wheel collapse
(10) Undetermined location
(99) Unknown

INSTRUMENT PANEL

94. Odometer Reading 0 9 6,000
6104 kilometers—Code to the nearest 1,000 kilometers
(000) No odometer
(001) Less than 1,500 kilometers
(500) 499,500 kilometers or more
(999) Unknown

3,793 miles X 1.6093 = ___,___ kilometers

Source: Inspection

95. Instrument Panel Damage from Occupant Contact? 0
(0) No
(1) Yes
(9) Unknown

96. Knee Bolsters Deformed from Occupant Contact? 0
(0) No
(1) Yes
(8) Not present
(9) Unknown

97. Did Glove Compartment Door Open During Collision(s)? 0
(0) No
(1) Yes
(8) Not present
(9) Unknown

VEHICLE INTERIOR SKETCHES

Note area of ejection/entrapment

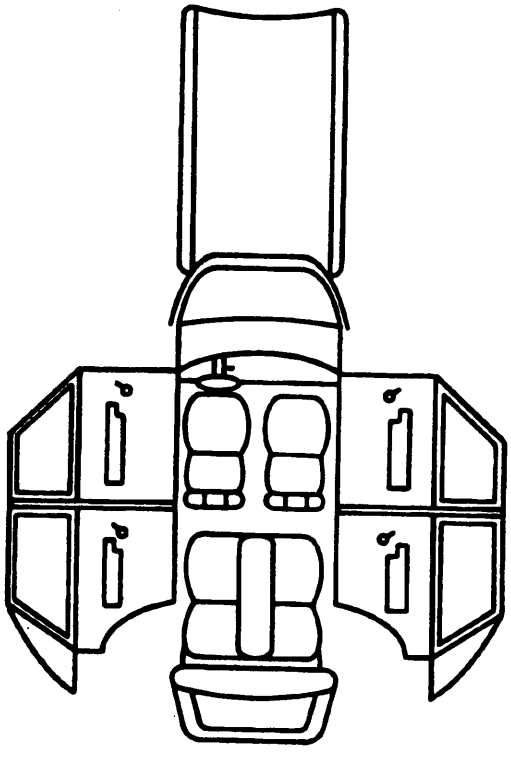

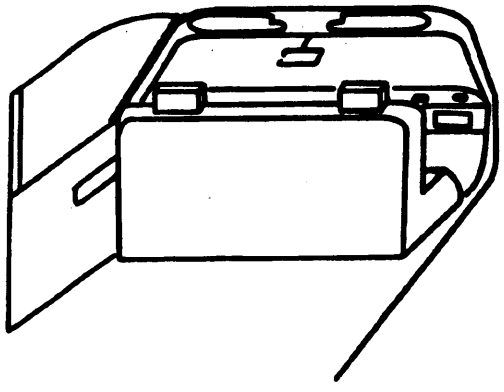

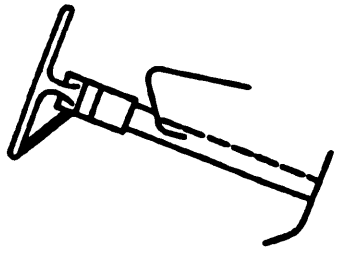

NONE Found

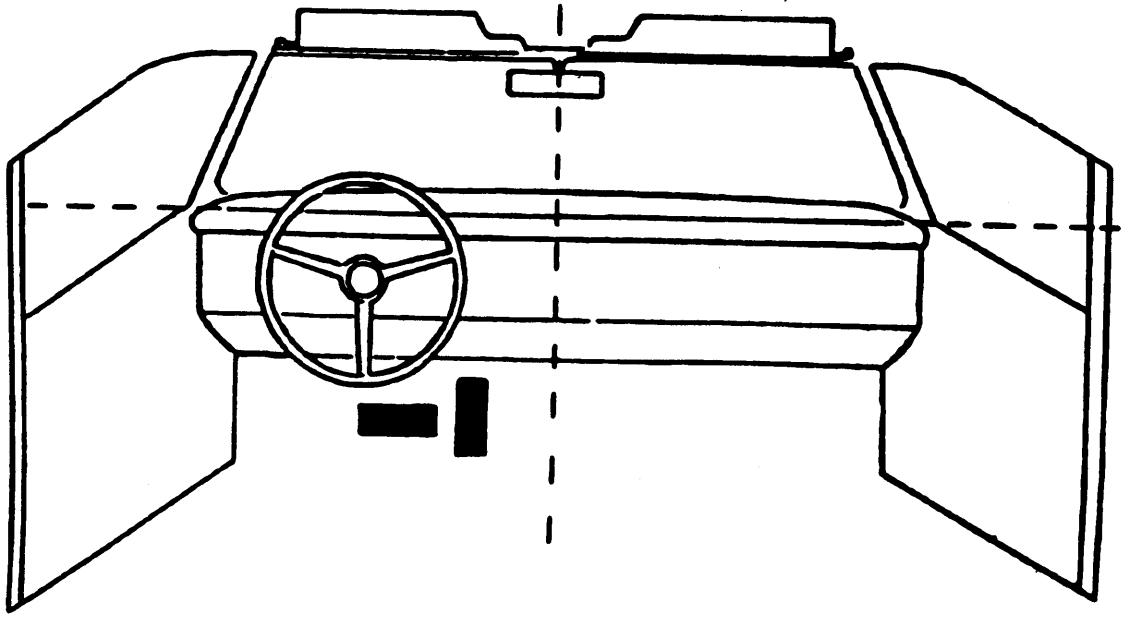

Sketch windshield contact(s) and the damaged area(s) on the instrument panel outline (e.g., radio, glove compartment, damage to instrument panel structure.
Cross hatch contact points, draw spider webs or use other annotation as may be appropriate.
Annotate the contacted area with a letter (begin with A) and list on the Points of Occupant Contact page.

POINTS OF OCCUPANT CONTACT

Contact	Interior Component Contacted	Occupant No. If Known	Body Region If Known	Supporting Physical Evidence	Confidence Level of Contact Point
A					
B					
C					
D					
E					
F					
G					
H					
I					
J					
K					
L					
M					
N					

CODES FOR INTERIOR COMPONENTS

FRONT
- (01) Windshield
- (02) Mirror
- (03) Sunvisor
- (04) Steering wheel rim
- (05) Steering wheel hub/spoke
- (06) Steering wheel (combination of codes 04 and 05)
- (07) Steering column, transmission selector lever, other attachment
- (08) Add on equipment (e.g., CB, tape deck, air conditioner)
- (09) Left instrument panel and below
- (10) Center instrument panel and below
- (11) Right instrument panel and below
- (12) Glove compartment door
- (13) Knee bolster
- (14) Windshield including one or more of the following: front header, A (A1/A2)-pillar, instrument panel, mirror, or steering assembly (driver side only)
- (15) Windshield including one or more of the following: front header, A (A1/A2)-pillar, instrument panel, or mirror (passenger side only)
- (16) Driver side air bag compartment cover
- (17) Passenger side air bag compartment cover
- (18) Windshield reinforced by exterior object (specify):_____
- (19) Other front object (specify): _____

LEFT SIDE
- (20) Left side interior surface, excluding hardware or armrests
- (21) Left side hardware or armrest
- (22) Left A (A1/A2)-pillar
- (23) Left B-pillar
- (24) Other left pillar (specify): _____
- (25) Left side window glass or frame
- (26) Left side window glass including one or more of the following: frame, window sill, A (A1/A2)-pillar, B-pillar, or roof side rail.
- (27) Other left side object (specify): _____
- (28) Left side window sill

RIGHT SIDE
- (30) Right side interior surface, excluding hardware or armrests
- (31) Right side hardware or armrest
- (32) Right A (A1/A2)-pillar
- (33) Right B-pillar
- (34) Other right pillar (specify): _____
- (35) Right side window glass or frame
- (36) Right side window glass including one or more of the following: frame, window sill, A (A1/A2)-pillar, B pillar, or roof side rail.
- (37) Other right side object (specify): _____
- (38) Right side window sill

INTERIOR
- (40) Seat, back support
- (41) Belt restraint webbing/buckle
- (42) Belt restraint B-pillar attachment point
- (43) Other restraint system component (specify):_____
- (44) Head restraint system
- (45) Air bag (use codes "16" and "17" for injuries sustained from air bag compartment covers)
- (46) Other occupants (specify): _____
- (47) Interior loose objects
- (48) Child safety seat (specify): _____
- (49) Other interior object (specify): _____

ROOF
- (50) Front header
- (51) Rear header
- (52) Roof left side rail
- (53) Roof right side rail
- (54) Roof or convertible top

FLOOR
- (56) Floor (including toe pan)
- (57) Floor or console mounted transmission lever, including console
- (58) Parking brake handle
- (59) Foot controls including parking brake

REAR
- (60) Backlight (rear window)
- (61) Backlight storage rack, door, etc.
- (62) Other rear object (specify): _____

CONFIDENCE LEVEL OF CONTACT POINT
- (1) Certain
- (2) Probable
- (3) Possible
- (9) Unknown

AUTOMATIC RESTRAINTS

NOTES: Encode the data for each applicable front seat position. The attribute for the variables may be found below. Restraint systems should be assessed during the vehicle inspection then coded on the Occupant Assessment Form.

AIR BAGS

		Left	Right
FIRST	Availability/Function	1	1
	Deployment	4	4
	Failure	1	1

Air Bag System Availability/Function
(0) Not equipped/not available
(1) Air bag

Non-functional
(2) Air bag disconnected (specify): _____
(3) Air bag not reinstalled
(9) Unknown

Air Bag System Deployment
(0) Not equipped/not available
(1) Air bag deployed during accident (as a result of impact)
(2) Air bag deployed inadvertently just prior to accident
(3) Air bag deployed, accident sequence undetermined
(4) Nondeployed
(5) Unknown if deployed
(6) Air bag deployed as a result of a noncollision event during accident sequence (e.g., fire, explosion, electrical)
(9) Unknown

Did Air Bag System Fail?
(0) Not equipped/not available
(1) No
(2) Yes (specify): _____
(9) Unknown

AUTOMATIC BELTS

		Left	Right
FIRST	Availability/Function		
	Use		
	Type		
	Proper Use		
	Failure Modes		

Automatic (Passive) Belt System Availability/Function
(0) Not equipped/not available
(1) 2 point automatic belts
(2) 3 point automatic belts
(3) Automatic belts - type unknown

Non-functional
(4) Automatic belts destroyed or rendered inoperative
(9) Unknown

Automatic (Passive) Belt System Use
(0) Not equipped/not available/destroyed or rendered inoperative
(1) Automatic belt in use
(2) Automatic belt not in use (manually disconnected, motorized track inoperative)
(3) Automatic belt use unknown
(9) Unknown

Automatic (Passive) Belt System Type
(0) Not equipped/not available
(1) Non-motorized system
(2) Motorized system
(9) Unknown

Proper Use of Automatic (Passive) Belt System
(0) Not equipped/not available/not used
(1) Automatic belt used properly
(2) Automatic belt used properly with child safety seat

Automatic Belt Used Improperly
(3) Automatic shoulder belt worn under arm
(4) Automatic shoulder belt worn behind back
(5) Automatic belt worn around more than one person
(6) Lap portion of automatic belt worn on abdomen
(7) Automatic lap and shoulder belt or automatic shoulder belt used improperly with child safety seat (specify): _____
(8) Other improper use of automatic belt system (specify): _____
(9) Unknown

Automatic (Passive) Belt Failure Modes During Accident
(0) Not equipped/not available/not in use
(1) No automatic belt failure(s)
(2) Torn webbing (stretched webbing not included)
(3) Broken buckle or latchplate
(4) Upper anchorage separated
(5) Other anchorage separated (specify): _____
(6) Broken retractor
(7) Combination of above (specify):
(8) Other automatic belt failure (specify): _____
(9) Unknown

MANUAL RESTRAINTS

NOTES: Encode the applicable data **for each seat position** in the vehicle. The attribute for the variable may be found below. Restraint systems should be assessed during the vehicle inspection then coded on the Ocupant Assessment Form.

If a Child safety seat is present, encode the data on the back of this page.

If the vehicle has automatic restraints available, encode the appropriate data on the back of the previous page.

		Left	Center	Right
FIRST	Availability	4	3	4
	Use	04	03	04
	Failure Modes	1	1	1
SECOND	Availability	4	3	4
	Use	04	03	04
	Failure Modes	1	1	1
THIRD	Availability			
	Use			
	Failure Modes			
OTHER	Availability			
	Use			
	Failure Modes			

Manual (Active) Belt System Availability

(0) None available
(1) Belt removed/destroyed
(2) Shoulder belt
(3) Lap belt
(4) Lap and shoulder belt
(5) Belt available - type unknown

Integral Belt Partially Destroyed

(6) Shoulder belt (lap belt destroyed/removed)
(7) Lap belt (shoulder belt destroyed/removed)

(8) Other belt (specify): _____

(9) Unknown

Manual (Active) Belt System Use

(00) None used, not available, or belt removed/destroyed
(01) Inoperable (specify): _____
(02) Shoulder belt
(03) Lap belt
(04) Lap and shoulder belt
(05) Belt used - type unknown
(08) Other belt used (specify): _____
(12) Shoulder belt used with child safety seat
(13) Lap belt used with child safety seat
(14) Lap and shoulder belt used with child safety seat
(15) Belt used with child safety seat - type unknown
(18) Other belt used with child safety seat (specify): _____
(99) Unknown if belt used

Manual (Active) Belt Failure Modes During Accident

(0) No manual belt used or not available
(1) No manual belt failure(s)
(2) Torn webbing (stretched webbing not included)
(3) Broken buckle or latchplate
(4) Upper anchorage separated
(5) Other anchorage separated (specify): _____
(6) Broken retractor
(7) Combination of above (specify): _____
(8) Other manual belt failure (specify): _____
(9) Unknown

CHILD SAFETY SEAT FIELD ASSESSMENT

When a child safety seat is present enter the occupant's number in the first row and complete the column below the occupant's number using the codes listed below. Complete a column for each child safety seat present.

Occupant Number	#2					
1. Type of Child Safety Seat	2					
2. Child Safety Seat Orientation	12					
3. Child Safety Seat Harness Usage	12					
4. Child Safety Seat Shield Uasge	03					
5. Child Safety Seat Tether Usage	03					
6. Child Safety Seat Make/Model	Specify Below for Each Child Safety Seat					

1. Type of Child Safety Seat
   - (0) No child safety seat
   - (1) Infant seat
   - (2) Toddler seat
   - (3) Convertible seat
   - (4) Booster seat
   - (7) Other type child safety seat (specify): _____
   - (8) Unknown child safety seat type
   - (9) Unknown if child safety seat used

2. Child Safety Seat Orientation
   - (00) No child safety seat

   Designed for Rear Facing for This Age/Weight
   - (01) Rear facing
   - (02) Forward facing
   - (08) Other orientation (specify): _____
   - (09) Unknown orientation

   Designed for Forward Facing for This Age/Weight
   - (11) Rear facing
   - (12) Forward facing
   - (18) Other orientation (specify): _____
   - (19) Unknown orientation

   Unknown Design or Orientation For This Age/Weight, or Unknown Age/Weight
   - (21) Rear facing
   - (22) Forward facing
   - (28) Other orientation (specify): _____
   - (29) Unknown orientation

   - (99) Unknown if child safety seat used

3. Child Safety Seat Harness Usage

4. Child Safety Seat Shield Usage

5. Child Safety Seat Tether Usage
   Note: Options Below Are Used for Variables 3-5.
   - (00) No child safety seat

   Not Designed with Harness/Shield/Tether
   - (01) After market harness/shield/tether added, not used
   - (02) After market harness/shield/tether used
   - (03) Child safety seat used, but no after market harness/shield/tether added
   - (09) Unknown if harness/shield/tether added or used

   Designed With Harness/Shield/Tether
   - (11) Harness/shield/tether not used
   - (12) Harness/shield/tether used
   - (19) Unknown if harness/shield/tether used

   Unknown If Designed With Harness/Shield/Tether
   - (21) Harness/shield/tether not used
   - (22) Harness/shield/tether used
   - (29) Unknown if harness/shield/tether used

   - (99) Unknown if child safety seat used

6. Child Safety Seat Make/Model
   (Specify make/model and occupant number)
   Occupant #2 / COSCO
   _____
   _____
   _____

HEAD RESTRAINTS/SEAT EVALUATION

NOTES: Encode the applicable data for **each seat position** in the vehicle. The attribute for these variables may be found at the bottom of the page. Head restraint type/damage and seat type/performance should be assessed during the vehicle inspection then coded on the Occupant Assessment Form.

		Left	Center	Right
FIRST	Head Restraint Type/Damage	3	0	3
	Seat Type	06	06	06
	Seat Performance	1	1	1
	Seat Orientation	1	1	1
SECOND	Head Restraint Type/Damage	0	0	0
	Seat Type	03	03	03
	Seat Performance	1	1	1
	Seat Orientation	1	1	1
THIRD	Head Restraint Type/Damage			
	Seat Type			
	Seat Performance			
	Seat Orientation			
OTHER	Head Restraint Type/Damage			
	Seat Type			
	Seat Performance			
	Seat Orientation			

Head Restraint Type/Damage by Occupant at This Occupant Position

(0) No head restraints
(1) Integral — no damage
(2) Integral — damaged during accident
(3) Adjustable — no damage
(4) Adjustable — damaged during accident
(5) Add-on — no damage
(6) Add-on — damaged during accident
(8) Other Specify): _____
(9) Unknown

Seat Type (this Occupant Position)

(00) Occupant not seated or no seat
(01) Bucket
(02) Bucket with folding back
(03) Bench
(04) Bench with separate back cushions
(05) Bench with folding back(s)
(06) Split bench with separate back cushions
(07) Split bench with folding back(s)
(08) Pedestal (i.e., column supported)
(09) Other seat type (specify): _____
(10) Box mounted seat (i.e., van type)
(99) Unknown

Seat Performance (this Occupant Position)

(0) Occupant not seated or no seat
(1) No seat performance failure(s)
(2) Seat adjusters failed
(3) Seat back folding locks or "seat back" failed specify: _____
(4) Seat tracks/anchors failed
(5) Deformed by impact of occupant
(6) Deformed by passenger compartment intrusion (specify): _____
(7) Combination of above (specify): _____
(8) Other (specify): _____
(9) Unknown

Seat Orientation (this Occupant Position)

(0) Occupant not seated or no seat
(1) Forward facing seat
(2) Rear facing seat
(3) Side facing seat (inward)
(4) Side facing seat (outward)
(8) Other (specify): _____
(9) Unknown

DESCRIBE ANY INDICATION OF ABNORMAL OCCUPANT POSTURE (I.E., UNUSUAL OCCUPANT CONTACT PATTERN)

EJECTION/ENTRAPMENT DATA

Complete the following if the researcher has any indication that an occupant was either ejected from or entrapped in the vehicle. Code the appropriate data on the Occpant Assessment Form.

EJECTION No [✓] Yes [ ]

Describe indications of ejection and body parts involved in partial ejection(s):

_____

_____

_____

_____

_____

Occupant Number						
Ejection						
(Note on Vehicle Interior Sketch) Ejection Area						
Ejection Medium						
Medium Status						

Ejection
- (1) Complete ejection
- (1) Partial ejection
- (3) Ejection, Unknown degree
- (9) Unknown

Ejection Area
- (1) Windshield
- (2) Left front
- (3) Right front
- (4) Left rear
- (5) Right rear
- (6) Rear
- (7) Roof
- (8) Other area (e.g., back of pickup, etc.) (specify): _____
- (9) Unknown

Ejection Medium
- (1) Door/hatch/tailgate
- (2) Nonfixed roof structure
- (3) Fixed glazing
- (4) Nonfixed glazing (specify): _____
- (5) Integral structure
- (8) Other medium (specify): _____
- (9) Unknown

Medium Status (Immediately Prior to Impact)
- (1) Open
- (2) Closed
- (3) Integral structure
- (9) Unknown

ENTRAPMENT No [✓] Yes [ ]

Describe entrapment mechanism: _____

_____

_____

_____

_____

Component(s): _____

_____

(Note in vehicle interior diagram)

U.S. Department of Transportation
National Highway Traffic Safety Administration

OCCUPANT ASSESSMENT FORM

Form Approved
O.M.B. No. 2127-0021

NATIONAL ACCIDENT SAMPLING SYSTEM
CRASHWORTHINESS DATA SYSTEM

1. Primary Sampling Unit Number 05
2. Case Number - Stratum 023 E
3. Vehicle Number 01
4. Occupant Number 01

OCCUPANT'S CHARACTERISTICS

5. Occupant's Age 23
   Code actual age at time of accident.
   (00) Less than one year old (specify by month): _____
   (97) 97 years and older
   (99) Unknown

6. Occupant's Sex 2
   (1) Male
   (2) Female
   (9) Unknown

7. Occupant's Height 168
   Code actual height to the nearest centimeter.
   (999) Unknown

   ___ ___ inches X 2.54 = ___ ___ ___ centimeters

8. Occupant's Weight Ø48
   Code actual weight to the nearest kilogram.
   (999)Unknown

   ___ ___ ___ pounds X .4536 = ___ ___ ___ kilograms

9. Occupant's Role 1
   (1) Driver
   (2) Passenger
   (9) Unknown

OCCUPANT'S SEATING

10. Occupant's Seat Position 11
    Front Seat
    (11) Left side
    (12) Middle
    (13) Right side
    (14) Other (specify): _____
    (15) On or in the lap of another occupant

    Second Seat
    (21) Left side
    (22) Middle
    (23) Right side
    (24) Other (specify): _____
    (25) On or in the lap of another occupant

    Third Seat
    (31) Left side
    (32) Middle
    (33) Right side
    (34) Other (specify): _____
    (35) On or in the lap of another occupant

    Fourth Seat
    (41) Left side
    (42) Middle
    (43) Right side
    (44) Other (specify): _____
    (45) On or in the lap of another occupant

    (97) In or on unenclosed area
    (98) Other seat (specify): _____
    (99) Unknown

11. Occupant's Posture 0
    (0) Normal posture

    Abnormal posture
    (1) Kneeling or standing on seat
    (2) Lying on or across seat
    (3) Kneeling, standing or sitting in front of seat
    (4) Sitting sideways or turned to talk with another occupant or to look out a rear window
    (5) Sitting on a console
    (6) Lying back in a reclined seat position
    (7) Bracing with feet or hands on a surface in front of seat
    (8) Other abnormal posture (specify): _____
    (9) Unknown

This report is authorized by P.L. 89-563, Title 1, Section 106, 108, and 112. While you are not required to respond, your cooperation is needed to make the results of this data collection effort comprehensive, accurate, and timely.

EJECTION/ENTRAPMENT

12. Ejection 0
    (0) No ejection
    (1) Complete ejection
    (2) Partial ejection
    (3) Ejection, unknown degree
    (9) Unknown

13. Ejection Area 0
    (0) No ejection
    (1) Windshield
    (2) Left front
    (3) Right front
    (4) Left rear
    (5) Right rear
    (6) Rear
    (7) Roof
    (8) Other area (e.g., back of pickup, etc.) (specify):_____
    (9) Unknown

14. Ejection Medium 0
    (0) No ejection
    (1) Door/hatch/tailgate
    (2) Nonfixed roof structure
    (3) Fixed glazing
    (4) Nonfixed glazing (specify): _____
    (5) Integral structure
    (8) Other medium (specify): _____
    (9) Unknown

15. Medium Status (Immediately Prior To Impact) 0
    (0) No ejection
    (1) Open
    (2) Closed
    (3) Integral structure
    (9) Unknown

16. Entrapment 0
    (NOTE: Entrapped means that part of the person was in the vehicle and mechanically restrained; jammed doors and immobilizing injuries by themselves are not sufficient to constitute entrapment.)
    (0) Not entrapped
    (1) Entrapped
    (9) Unknown

RESTRAINT SYSTEM EVALUATION

17. Manual (Active) Belt System Availability 4
    (0) None available
    (1) Belt removed/destroyed
    (2) Shoulder belt
    (3) Lap belt
    (4) Lap and shoulder belt
    (5) Belt available—type unknown

    Integral Belt Partially Destroyed
    (6) Shoulder belt (lap belt destroyed/removed)
    (7) Lap belt (shoulder belt destroyed/removed)

    (8) Other belt (specify): _____

    (9) Unknown

18. Manual (Active) Belt System Use 0 0
    (00) None used, not available, or belt removed/destroyed
    (01) Inoperative (specify): _____

    (02) Shoulder belt
    (03) Lap belt
    (04) Lap and shoulder belt
    (05) Belt used—type unknown
    (08) Other belt used (specify): _____

    (12) Shoulder belt used with child safety seat
    (13) Lap belt used with child safety seat
    (14) Lap and shoulder belt used with child safety seat
    (15) Belt used with child safety seat—type unknown
    (18) Other belt used with child safety seat (specify): _____
    (99) Unknown if belt used

19. Proper Use of Manual (Active) Belts 0
    (0) None used or not available
    (1) Belt used properly
    (2) Belt used properly with child safety seat

    Belt Used Improperly
    (3) Shoulder belt worn under arm
    (4) Shoulder belt worn behind back or seat
    (5) Belt worn around more than one person
    (6) Lap belt worn on abdomen
    (7) Lap belt or lap and shoulder belt used improperly with child safety seat (specify): _____

    (8) Other improper use of manual belt system (specify): _____

    (9) Unknown

20. Manual (Active) Belt Failure Modes During Accident 0
    (0) No manual belt used
    (1) No manual belt failure(s)
    (2) Torn webbing (stretched webbing not included)
    (3) Broken buckle or latchplate
    (4) Upper anchorage separated
    (5) Other anchorage separated (specify): _____

    (6) Broken retractor
    (7) Combination of above (specify): _____

    (8) Other manual belt failure (specify): _____

    (9) Unknown

21. Air Bag System Availability/Function 1
    (0) Not equipped/not available
    (1) Air bag

    Non-functional
    (2) Air bag disconnected (specify): _____

    (3) Air bag not reinstalled
    (9) Unknown

22. Air Bag System Deployment 4
    (0) Not equipped/not available
    (1) Air bag deployed during accident (as a result of impact)
    (2) Air bag deployed inadvertently just prior to accident
    (3) Air bag deployed, accident sequence undetermined
    (4) Nondeployed
    (5) Unknown if deployed
    (6) Air bag deployed as a result of a noncollision event during accident sequence (e.g., fire, explosion, electrical)
    (9) Unknown

23. Are There Indications of Air Bag System Failure? 1
    (0) Not equipped/not available
    (1) No
    (2) Yes (specify): _____

    (9) Unknown

    Note: See Variables 44 through 48 (Page 5) for Information on Automatic Belts

24. Police Reported Restraint Use 0
    (0) None used
    (1) Police did not indicate restraint use
    (2) Shoulder belt
    (3) Lap belt
    (4) Lap and shoulder belt
    (5) Belt used, type not specified
    (6) Child safety seat
    (7) Other or automatic restraint (specify): _____

    (8) Restrained, type unknown
    (9) Police indicated "unknown"

HEAD RESTRAINT AND SEAT EVALUATION

25. Head Restraint Type/Damage by Occupant at This Occupant Position 3
    (0) No head restraints
    (1) Integral—no damage
    (2) Integral—damaged during accident
    (3) Adjustable—no damage
    (4) Adjustable—damaged during accident
    (5) Add-on—no damage
    (6) Add-on—damaged during accident
    (8) Other (specify): _____
    (9) Unknown

26. Seat Type (this Occupant Position) 0 6
    (00) Occupant not seated or no seat
    (01) Bucket
    (02) Bucket with folding back
    (03) Bench
    (04) Bench with separate back cushions
    (05) Bench with folding back(s)
    (06) Split bench with separate back cushions
    (07) Split bench with folding back(s)
    (08) Pedestal (i.e., column supported)
    (09) Other seat type (specify): _____
    (10) Box mounted seat (i.e., van type)
    (99) Unknown

27. Seat Performance (this Occupant Position) 1
    (0) Occupant not seated or no seat
    (1) No seat performance failure(s)
    (2) Seat adjusters failed
    (3) Seat back folding locks or "seat back" failed
    (4) Seat track/anchors failed
    (5) Deformed by impact of occupant
    (6) Deformed by passenger compartment intrusion (specify): _____
    (7) Combination of above (specify): _____
    (8) Other (specify): _____
    (9) Unknown

CHILD SAFETY SEAT

28. Child Safety Seat Make/Model 0 0 0
(000) No child safety seat
Applicable codes are found in your NASS CDS Data Collection, Coding and Editing
(950) Built-in child safety seat
(997) Other make/model (specify): _____
(998) Unknown make/model
(999) Unknown if child safety seat used

29. Type of Child Safety Seat 0
(0) No child safety seat
(1) Infant seat
(2) Toddler seat
(3) Convertible seat
(4) Booster seat
(7) Other type child safety seat (specify): _____
(8) Unknown child safety seat type
(9) Unknown if child safety seat used

30. Child Safety Seat Orientation 0 0
(00) No child safety seat

Designed for Rear Facing for This Age/Weight
(01) Rear facing
(02) Forward facing
(08) Other orientation (specify): _____
(09) Unknown orientation

Designed For Forward Facing for This Age/Weight
(11) Rear facing
(12) Forward facing
(18) Other orientation (specify): _____
(19) Unknown orientation

Unknown Design or Orientation For This Age/Weight, or Unknown Age/Weight
(21) Rear facing
(22) Forward facing
(28) Other orientation (specify): _____
(29) Unknown orientation

(99) Unknown if child safety seat used

31. Child Safety Seat Harness Usage 0 0

32. Child Safety Seat Shield Usage 0 0

33. Child Safety Seat Tether Usage 0 0

Note: Options below applicable to Variables OA31-OA33.
(00) No child safety seat

Not Designed With Harness/Shield/Tether
(01) After market harness/shield/tether added, not used
(02) After market harness/shield/tether used
(03) Child safety seat used, but no after market harness/shield/tether added
(09) Unknown if harness/shield/tether added or used

Designed With Harness/Shield/Tether
(11) Harness/shield/tether not used
(12) Harness/shield/tether used
(19) Unknown if harness/shield/tether used

Unknown If Designed With Harness/Shield/Tether
(21) Harness/shield/tether not used
(22) Harness/shield/tether used
(29) Unknown if harness/shield/tether used

(99) Unknown if child safety seat used

INJURY CONSEQUENCES

34. Injury Severity (Police Rating) 0

(0) O - No injury
(1) C - Possible injury
(2) B - Nonincapacitating injury
(3) A - Incapacitating injury
(4) K - Killed
(5) U - Injury, severity unknown
(6) Died prior to accident
(9) Unknown

35. Treatment - Mortality 4
(0) No treatment
(1) Fatal
(2) Fatal - ruled disease (specify):

_____

Nonfatal
(3) Hospitalization
(4) Transported and released
(5) Treatment at scene - nontransported
(6) Treatment later
(8) Treatment - other (specify):

_____

(9) Unknown

36. Type Of Medical Facility (for Initial Treatment) 1
(0) Not treated at a medical facility
(1) Trauma center
(2) Hospital
(3) Medical clinic
(4) Physician's office
(5) Treatment later at medical facility
(8) Other (specify):

_____

(9) Unknown

37. Hospital Stay 00
(00) Not Hospitalized
____Code the number of days (up through 60) that the occupant stayed in hospital.
(61) 61 days or more
(99) Unknown

38. Working Days Lost 01
____Code the number of days (up through 60) that the occupant lost from work due to the accident
(00) No working days lost
(61) 61 days or more
(62) Fatally injured
(97) Not working prior to accident
(99) Unknown

STOP - GO TO VARIABLE 44 ON PAGE 7

VARIABLES 39 THROUGH 43 ARE COMPLETED BY THE ZONE CENTER

39. Time to Death 00
____Code number of hours from time of accident to time of death up through 24 hours. If time of death is greater than 24 hours, code number of days. (Note: 1 day = 31, 2 days = 32, ... n days = 30 +n up through 30 days = 60)
(00) Not fatal
(96) Fatal - ruled disease
(99) Unknown

40. 1st Medically Reported Cause of Death 00

41. 2nd Medically Reported Cause of Death 00

42. 3rd Medically Reported Cause of Death 00
____Code the Occupant Injury from line number(s) for the medically reported injury(s) which reportedly contributed to this occupant's death
(00) Not fatal or no additional causes
(97) Other result (includes fatal ruled disease) (specify):

_____

(99) Unknown

43. Number of Recorded Injuries for This Occupant 03
____Code the actual number of injuries recorded for this occupant.
(00) No recorded injuries
(97) Injured, details unknown
(99) Unknown if injured

AUTOMATIC BELT SYSTEM

44. Automatic (Passive) Belt System Availability/ Function 0
(0) Not equipped/not available
(1) 2 point automatic belts
(2) 3 point automatic belts
(3) Automatic belts - type unknown

Non-functional
(4) Automatic belts destroyed or rendered inoperative
(9) Unknown

45. Automatic (Passive) Belt System Use 0
(0) Not equipped/not available/destroyed or rendered inoperative
(1) Automatic belt in use
(2) Automatic belt not in use (manually disconnected, motorized track inoperative) (specify): _____
(3) Automatic belt use unknown
(9) Unknown

46. Automatic (Passive) Belt System Type 0
(0) Not equipped/not available
(1) Non-motorized system
(2) Motorized system
(9) Unknown

47. Proper Use of Automatic (Passive Belt System 0
(0) Not equipped/not available/not used
(1) Automatic belt used properly
(2) Automatic belt used properly with child safety seat

Automatic Belt Used Improperly
(3) Automatic shoulder belt worn under arm
(4) Automatic shoulder belt worn behind back
(5) Automatic belt worn around more than one person
(6) Lap portion of automatic belt worn on abdomen
(7) Automatic lap and shoulder belt or automatic shoulder belt used improperly with child safety seat (specify): _____
(8) Other improper use of automatic belt system (specify): _____
(9) Unknown

48. Automatic (Passive) Belt Failure Modes During Accident 0
(0) Not equipped/not available/not in use
(1) No automatic belt failure(s)
(2) Torn webbing (stretched webbing not included)
(3) Broken buckle or latchplate
(4) Upper anchorage separated
(5) Other anchorage separated (specify): _____
(6) Broken retractor
(7) Combination of above (specify):
(8) Other automatic belt failure (specify): _____
(9) Unknown

49. Seat Orientation (this Occupant Position) 1
(0) Occupant not seated or no seat
(1) Forward facing seat
(2) Rear facing seat
(3) Side facing seat (inward)
(4) Side facing seat (outward)
(8) Other (specify): _____
(9) Unknown

STOP - VARIABLES 50 THROUGH 52 ARE COMPLETED BY THE ZONE CENTER

TRAUMA DATA

50. Glasgow Coma Scale (GCS) Score (at Medical Facility) 02
(00) Not injured
(01) Injured - not treated at medical facility
(02) No GCS Score at medical facility
(03-15) Code the actual value of the initial GCS Score recorded at medical facility.
(97) Injured, details unknown
(99) Unknown if injured

51. Was the Occupant Given Blood? 1
(1) No - blood not given
(2) Yes - blood given (specify units): _____
(9) Unknown if blood given

52. Arterial Blood Gases (ABG) – HCO_3 01
(00) Not injured
(01) Injured, ABGs not measured or reported
(02-50) Code the actual value of the HCO_3
(96) ABGs reported , HCO_3 unknown
(97) Injured, details unknown
(99) Unknown if injured

ARE ALL APPLICABLE MEDICAL RECORDS INCLUDED WITH INITIAL SUBMISSION? NO [✓] YES [ ]

UPDATE CANDIDATE? NO [ ] YES [✓]

PSU NUMBER 05

CASE NUMBER 023E

VEHICLE NUMBER 01

OCCUPANT NUMBER 01

OCCUPANT INJURY FORM

THE FOLLOWING DATA IS NOT INCLUDED IN THIS CASE:

[✓] ENTIRE FORM

[] PAGE NUMBER (S) _____

U.S. Department of Transportation
National Highway Traffic Safety Administration

OCCUPANT ASSESSMENT FORM

Form Approved
O.M.B. No. 2127-0021

NATIONAL ACCIDENT SAMPLING SYSTEM
CRASHWORTHINESS DATA SYSTEM

1. Primary Sampling Unit Number 05
2. Case Number - Stratum 023E
3. Vehicle Number 01
4. Occupant Number 02

OCCUPANT'S CHARACTERISTICS

5. Occupant's Age 02
   Code actual age at time of accident.
   (00) Less than one year old (specify by month): _____
   (97) 97 years and older
   (99) Unknown

6. Occupant's Sex 1
   (1) Male
   (2) Female
   (9) Unknown

7. Occupant's Height 091
   Code actual height to the nearest centimeter.
   (999) Unknown

   ___ ___ inches X 2.54 = ___ ___ ___ centimeters

8. Occupant's Weight 016
   Code actual weight to the nearest kilogram.
   (999)Unknown

   ___ ___ ___ pounds X .4536 = ___ ___ ___ kilograms

9. Occupant's Role 2
   (1) Driver
   (2) Passenger
   (9) Unknown

OCCUPANT'S SEATING

10. Occupant's Seat Position 23

Front Seat
(11) Left side
(12) Middle
(13) Right side
(14) Other (specify): _____
(15) On or in the lap of another occupant

Second Seat
(21) Left side
(22) Middle
(23) Right side
(24) Other (specify): _____
(25) On or in the lap of another occupant

Third Seat
(31) Left side
(32) Middle
(33) Right side
(34) Other (specify): _____
(35) On or in the lap of another occupant

Fourth Seat
(41) Left side
(42) Middle
(43) Right side
(44) Other (specify): _____
(45) On or in the lap of another occupant

(97) In or on unenclosed area
(98) Other seat (specify): _____
(99) Unknown

NAIS CODING CHANGE
1st Review: JA
2nd Review: _____

11. Occupant's Posture 08
    (0) Normal posture

Abnormal posture
(1) Kneeling or standing on seat
(2) Lying on or across seat
(3) Kneeling, standing or sitting in front of seat
(4) Sitting sideways or turned to talk with another occupant or to look out a rear window
(5) Sitting on a console
(6) Lying back in a reclined seat position
(7) Bracing with feet or hands on a surface in front of seat
(8) Other abnormal posture (specify): fodder seat
(9) Unknown

This report is authorized by P.L. 89-563, Title 1, Section 106, 108, and 112. While you are not required to respond, your cooperation is needed to make the results of this data collection effort comprehensive, accurate, and timely.

EJECTION/ENTRAPMENT

12. Ejection 0
    (0) No ejection
    (1) Complete ejection
    (2) Partial ejection
    (3) Ejection, unknown degree
    (9) Unknown

13. Ejection Area 0
    (0) No ejection
    (1) Windshield
    (2) Left front
    (3) Right front
    (4) Left rear
    (5) Right rear
    (6) Rear
    (7) Roof
    (8) Other area (e.g., back of pickup, etc.) (specify):_____
    (9) Unknown

14. Ejection Medium 0
    (0) No ejection
    (1) Door/hatch/tailgate
    (2) Nonfixed roof structure
    (3) Fixed glazing
    (4) Nonfixed glazing (specify): _____
    (5) Integral structure
    (8) Other medium (specify): _____
    (9) Unknown

15. Medium Status (Immediately Prior To Impact) 0
    (0) No ejection
    (1) Open
    (2) Closed
    (3) Integral structure
    (9) Unknown

16. Entrapment 0
    (NOTE: Entrapped means that part of the person was in the vehicle and mechanically restrained; jammed doors and immobilizing injuries by themselves are not sufficient to constitute entrapment.)
    (0) Not entrapped
    (1) Entrapped
    (9) Unknown

RESTRAINT SYSTEM EVALUATION

17. Manual (Active) Belt System Availability 4
    (0) None available
    (1) Belt removed/destroyed
    (2) Shoulder belt
    (3) Lap belt
    (4) Lap and shoulder belt
    (5) Belt available—type unknown

    Integral Belt Partially Destroyed
    (6) Shoulder belt (lap belt destroyed/removed)
    (7) Lap belt (shoulder belt destroyed/removed)

    (8) Other belt (specify): _____

    (9) Unknown

18. Manual (Active) Belt System Use 14
    (00) None used, not available, or belt removed/destroyed
    (01) Inoperative (specify): _____

    (02) Shoulder belt
    (03) Lap belt
    (04) Lap and shoulder belt
    (05) Belt used—type unknown
    (08) Other belt used (specify): _____

    (12) Shoulder belt used with child safety seat
    (13) Lap belt used with child safety seat
    (14) Lap and shoulder belt used with child safety seat
    (15) Belt used with child safety seat—type unknown
    (18) Other belt used with child safety seat (specify): _____
    (99) Unknown if belt used

19. Proper Use of Manual (Active) Belts 2
    (0) None used or not available
    (1) Belt used properly
    (2) Belt used properly with child safety seat

    Belt Used Improperly
    (3) Shoulder belt worn under arm
    (4) Shoulder belt worn behind back or seat
    (5) Belt worn around more than one person
    (6) Lap belt worn on abdomen
    (7) Lap belt or lap and shoulder belt used improperly with child safety seat (specify): _____

    (8) Other improper use of manual belt system (specify): _____

    (9) Unknown

20. Manual (Active) Belt Failure Modes During Accident 1
    (0) No manual belt used
    (1) No manual belt failure(s)
    (2) Torn webbing (stretched webbing not included)
    (3) Broken buckle or latchplate
    (4) Upper anchorage separated
    (5) Other anchorage separated (specify): _____

    (6) Broken retractor
    (7) Combination of above (specify): _____

    (8) Other manual belt failure (specify): _____

    (9) Unknown

21. Air Bag System Availability/Function 0
    (0) Not equipped/not available
    (1) Air bag

    Non-functional
    (2) Air bag disconnected (specify): _____

    (3) Air bag not reinstalled
    (9) Unknown

22. Air Bag System Deployment 0
    (0) Not equipped/not available
    (1) Air bag deployed during accident (as a result of impact)
    (2) Air bag deployed inadvertently just prior to accident
    (3) Air bag deployed, accident sequence undetermined
    (4) Nondeployed
    (5) Unknown if deployed
    (6) Air bag deployed as a result of a noncollision event during accident sequence (e.g., fire, explosion, electrical)
    (9) Unknown

23. Are There Indications of Air Bag System Failure? 0
    (0) Not equipped/not available
    (1) No
    (2) Yes (specify): _____

    (9) Unknown

Note: See Variables 44 through 48 (Page 5) for Information on Automatic Belts

24. Police Reported Restraint Use 1
    (0) None used
    (1) Police did not indicate restraint use
    (2) Shoulder belt
    (3) Lap belt
    (4) Lap and shoulder belt
    (5) Belt used, type not specified
    (6) Child safety seat
    (7) Other or automatic restraint (specify): _____

    (8) Restrained, type unknown
    (9) Police indicated "unknown"

HEAD RESTRAINT AND SEAT EVALUATION

25. Head Restraint Type/Damage by Occupant at This Occupant Position 0
    (0) No head restraints
    (1) Integral—no damage
    (2) Integral—damaged during accident
    (3) Adjustable—no damage
    (4) Adjustable—damaged during accident
    (5) Add-on—no damage
    (6) Add-on—damaged during accident
    (8) Other (specify): _____
    (9) Unknown

26. Seat Type (this Occupant Position) 03
    (00) Occupant not seated or no seat
    (01) Bucket
    (02) Bucket with folding back
    (03) Bench
    (04) Bench with separate back cushions
    (05) Bench with folding back(s)
    (06) Split bench with separate back cushions
    (07) Split bench with folding back(s)
    (08) Pedestal (i.e., column supported)
    (09) Other seat type (specify): _____
    (10) Box mounted seat (i.e., van type)
    (99) Unknown

27. Seat Performance (this Occupant Position) 1
    (0) Occupant not seated or no seat
    (1) No seat performance failure(s)
    (2) Seat adjusters failed
    (3) Seat back folding locks or "seat back" failed
    (4) Seat track/anchors failed
    (5) Deformed by impact of occupant
    (6) Deformed by passenger compartment intrusion (specify): _____
    (7) Combination of above (specify): _____
    (8) Other (specify): _____
    (9) Unknown

CHILD SAFETY SEAT

28. Child Safety Seat Make/Model 2 / 2
(000) No child safety seat
Applicable codes are found in your NASS CDS Data Collection, Coding and Editing
(950) Built-in child safety seat
(997) Other make/model (specify): _____
(998) Unknown make/model
(999) Unknown if child safety seat used

29. Type of Child Safety Seat 2
(0) No child safety seat
(1) Infant seat
(2) Toddler seat
(3) Convertible seat
(4) Booster seat
(7) Other type child safety seat (specify): _____
(8) Unknown child safety seat type
(9) Unknown if child safety seat used

30. Child Safety Seat Orientation 12
(00) No child safety seat

Designed for Rear Facing for This Age/Weight
(01) Rear facing
(02) Forward facing
(08) Other orientation (specify): _____
(09) Unknown orientation

Designed For Forward Facing for This Age/Weight
(11) Rear facing
(12) Forward facing
(18) Other orientation (specify): _____
(19) Unknown orientation

Unknown Design or Orientation For This Age/Weight, or Unknown Age/Weight
(21) Rear facing
(22) Forward facing
(28) Other orientation (specify): _____
(29) Unknown orientation

(99) Unknown if child safety seat used

31. Child Safety Seat Harness Usage 03

32. Child Safety Seat Shield Usage 12

33. Child Safety Seat Tether Usage 03

Note: Options below applicable to Variables OA31-OA33.
(00) No child safety seat

Not Designed With Harness/Shield/Tether
(01) After market harness/shield/tether added, not used
(02) After market harness/shield/tether used
(03) Child safety seat used, but no after market harness/shield/tether added
(09) Unknown if harness/shield/tether added or used

Designed With Harness/Shield/Tether
(11) Harness/shield/tether not used
(12) Harness/shield/tether used
(19) Unknown if harness/shield/tether used

Unknown If Designed With Harness/Shield/Tether
(21) Harness/shield/tether not used
(22) Harness/shield/tether used
(29) Unknown if harness/shield/tether used

(99) Unknown if child safety seat used

INJURY CONSEQUENCES

34. Injury Severity (Police Rating) 9

(0) O - No injury
(1) C - Possible injury
(2) B - Nonincapacitating injury
(3) A - Incapacitating injury
(4) K - Killed
(5) U - Injury, severity unknown
(6) Died prior to accident
(9) Unknown

35. Treatment - Mortality 0
(0) No treatment
(1) Fatal
(2) Fatal - ruled disease (specify):

_____

Nonfatal
(3) Hospitalization
(4) Transported and released
(5) Treatment at scene - nontransported
(6) Treatment later
(8) Treatment - other (specify):

_____

(9) Unknown

36. Type Of Medical Facility (for Initial Treatment) 0
(0) Not treated at a medical facility
(1) Trauma center
(2) Hospital
(3) Medical clinic
(4) Physician's office
(5) Treatment later at medical facility
(8) Other (specify):

_____

(9) Unknown

37. Hospital Stay 00
(00) Not Hospitalized
____Code the number of days (up through 60) that the occupant stayed in hospital.
(61) 61 days or more
(99) Unknown

38. Working Days Lost 97
____Code the number of days (up through 60) that the occupant lost from work due to the accident
(00) No working days lost
(61) 61 days or more
(62) Fatally injured
(97) Not working prior to accident
(99) Unknown

STOP - GO TO VARIABLE 44 ON PAGE 7

VARIABLES 39 THROUGH 43 ARE COMPLETED BY THE ZONE CENTER

39. Time to Death 00
____Code number of hours from time of accident to time of death up through 24 hours. If time of death is greater than 24 hours, code number of days. (Note: 1 day = 31, 2 days = 32, ... n days = 30 +n up through 30 days = 60)
(00) Not fatal
(96) Fatal - ruled disease
(99) Unknown

40. 1st Medically Reported Cause of Death 00

41. 2nd Medically Reported Cause of Death 00

42. 3rd Medically Reported Cause of Death 00
____Code the Occupant Injury from line number(s) for the medically reported injury(s) which reportedly contributed to this occupant's death
(00) Not fatal or no additional causes
(97) Other result (includes fatal ruled disease) (specify):

_____

(99) Unknown

43. Number of Recorded Injuries for This Occupant 00
____Code the actual number of injuries recorded for this occupant.
(00) No recorded injuries
(97) Injured, details unknown
(99) Unknown if injured

AUTOMATIC BELT SYSTEM

44. Automatic (Passive) Belt System Availability/ Function 0
(0) Not equipped/not available
(1) 2 point automatic belts
(2) 3 point automatic belts
(3) Automatic belts - type unknown

Non-functional
(4) Automatic belts destroyed or rendered inoperative
(9) Unknown

45. Automatic (Passive) Belt System Use 0
(0) Not equipped/not available/destroyed or rendered inoperative
(1) Automatic belt in use
(2) Automatic belt not in use (manually disconnected, motorized track inoperative) (specify): _____
(3) Automatic belt use unknown
(9) Unknown

46. Automatic (Passive) Belt System Type 0
(0) Not equipped/not available
(1) Non-motorized system
(2) Motorized system
(9) Unknown

47. Proper Use of Automatic (Passive Belt System 0
(0) Not equipped/not available/not used
(1) Automatic belt used properly
(2) Automatic belt used properly with child safety seat

Automatic Belt Used Improperly
(3) Automatic shoulder belt worn under arm
(4) Automatic shoulder belt worn behind back
(5) Automatic belt worn around more than one person
(6) Lap portion of automatic belt worn on abdomen
(7) Automatic lap and shoulder belt or automatic shoulder belt used improperly with child safety seat (specify): _____
(8) Other improper use of automatic belt system (specify): _____
(9) Unknown

48. Automatic (Passive) Belt Failure Modes During Accident 0
(0) Not equipped/not available/not in use
(1) No automatic belt failure(s)
(2) Torn webbing (stretched webbing not included)
(3) Broken buckle or latchplate
(4) Upper anchorage separated
(5) Other anchorage separated (specify): _____
(6) Broken retractor
(7) Combination of above (specify):
(8) Other automatic belt failure (specify): _____
(9) Unknown

49. Seat Orientation (this Occupant Position) 1
(0) Occupant not seated or no seat
(1) Forward facing seat
(2) Rear facing seat
(3) Side facing seat (inward)
(4) Side facing seat (outward)
(8) Other (specify): _____
(9) Unknown

STOP - VARIABLES 50 THROUGH 52 ARE COMPLETED BY THE ZONE CENTER

TRAUMA DATA

50. Glasgow Coma Scale (GCS) Score (at Medical Facility) 00
(00) Not injured
(01) Injured - not treated at medical facility
(02) No GCS Score at medical facility
(03-15) Code the actual value of the initial GCS Score recorded at medical facility.
(97) Injured, details unknown
(99) Unknown if injured

51. Was the Occupant Given Blood? 1
(1) No - blood not given
(2) Yes - blood given (specify units): _____
(9) Unknown if blood given

52. Arterial Blood Gases (ABG) – HCO_3 00
(00) Not injured
(01) Injured, ABGs not measured or reported
(02-50) Code the actual value of the HCO_3
(96) ABGs reported , HCO_3 unknown
(97) Injured, details unknown
(99) Unknown if injured

ARE ALL APPLICABLE MEDICAL RECORDS INCLUDED WITH INITIAL SUBMISSION? NO [ ] YES [ ]

UPDATE CANDIDATE? NO [✓] YES [ ]

U.S. Department of Transportation

National Highway Traffic Safety Administration

BEST AVAILABLE

Form Approved
O.M.B. No. 2127-0021

OCCUPANT INJURY FORM

NATIONAL ACCIDENT SAMPLING SYSTEM
CRASHWORTHINESS DATA SYSTEM

1. Primary Sampling Unit Number	05	3. Vehicle Number	01
2. Case Number - Stratum	023E	4. Occupant Number	01

INJURY DATA

Record below the actual injuries sustained by this occupant that were identified from the official and unofficial data sources. Remember not to double count an injury just because it was identified from two different sources. If greater than ten injuries have been documented, encode the balance on the Occupant Injury Supplement.

	Source of Injury Data	O.I.C.-A.I.S Body Region	Type of Anatomic Structure	Specific Anatomic Structure	Level of Injury	A.I.S. Severity	Aspect	Injury Source	Injury Source Confidence Level	Direct/ Indirect Injury	Occupant Area Intrusion Number
1st (Contusion chest)	5. 7	6. 2	7. 9	8. 04	9. 02	10. 1	11. 7	12. 04	13. 1	14. 1	15. 00
2nd (Bilat pney Cont)	16. 7	17. 8	18. 9	19. 04	20. 02	21. 1	22. 3	23. 09	24. 1	25. 1	26. 00
3rd (Contrain)	27. 7	28. 6	29. 4	30. 02	31. 78	32. 1	33. 6	34. 04	35. 1	36. 2	37. 00
4th	38.	39.	40.	41.	42.	43.	44.	45.	46.	47.	48.
5th	49.	50.	51.	52.	53.	54.	55.	56.	57.	58.	59.
6th	60.	61.	62.	63.	64.	65.	66.	67.	68.	69.	70.
7th	71.	72.	73.	74.	75.	76.	77.	78.	79.	80.	81.
8th	82.	83.	84.	85.	86.	87.	88.	89.	90.	91.	92.
9th	93.	94.	95.	96.	97.	98.	99.	100.	101.	102.	103.
10th	104.	105.	106.	107.	108.	109.	110.	111.	112.	113.	114.

HS Form 433B (1/93)

This report is authorized by P.L. 89-563, Title 1, Section 106, 108, and 112. While you are not required to respond, your cooperation is needed to make the results of this data collection effort comprehensive, accurate, and timely.

OCCUPANT INJURY DATA

	Source of Injury Data	O.I.C.-A.I.S Body Region	Type of Anatomic Structure	Specific Anatomic Structure	Level of Injury	A.I.S. Severity	Aspect	Injury Source	Injury Source Confidence Level	Direct/ Indirect Injury	Occupant Area Intrusion Number
11th	__	__	__	__ __	__ __	__	__	__ __	__	__	__ __
12th	__	__	__	__ __	__ __	__	__	__ __	__	__	__ __
13th	__	__	__	__ __	__ __	__	__	__ __	__	__	__ __
14th	__	__	__	__ __	__ __	__	__	__ __	__	__	__ __
15th	__	__	__	__ __	__ __	__	__	__ __	__	__	__ __
16th	__	__	__	__ __	__ __	__	__	__ __	__	__	__ __
17th	__	__	__	__ __	__ __	__	__	__ __	__	__	__ __
18th	__	__	__	__ __	__ __	__	__	__ __	__	__	__ __
19th	__	__	__	__ __	__ __	__	__	__ __	__	__	__ __
20th	__	__	__	__ __	__ __	__	__	__ __	__	__	__ __
21st	__	__	__	__ __	__ __	__	__	__ __	__	__	__ __
22nd	__	__	__	__ __	__ __	__	__	__ __	__	__	__ __
23rd	__	__	__	__ __	__ __	__	__	__ __	__	__	__ __
24th	__	__	__	__ __	__ __	__	__	__ __	__	__	__ __
25th	__	__	__	__ __	__ __	__	__	__ __	__	__	__ __

OFFICIAL INJURY DATA — SOFT TISSUE INJURIES

Indicate the Location, Specific Anatomic Structure, Detail (size, depth, fracture type, head injury clinical signs and neurological deficits), and Source of all injuries indicated by official sources (or from PAR or other unofficial sources if medical records and interviewee data are unavailable.)

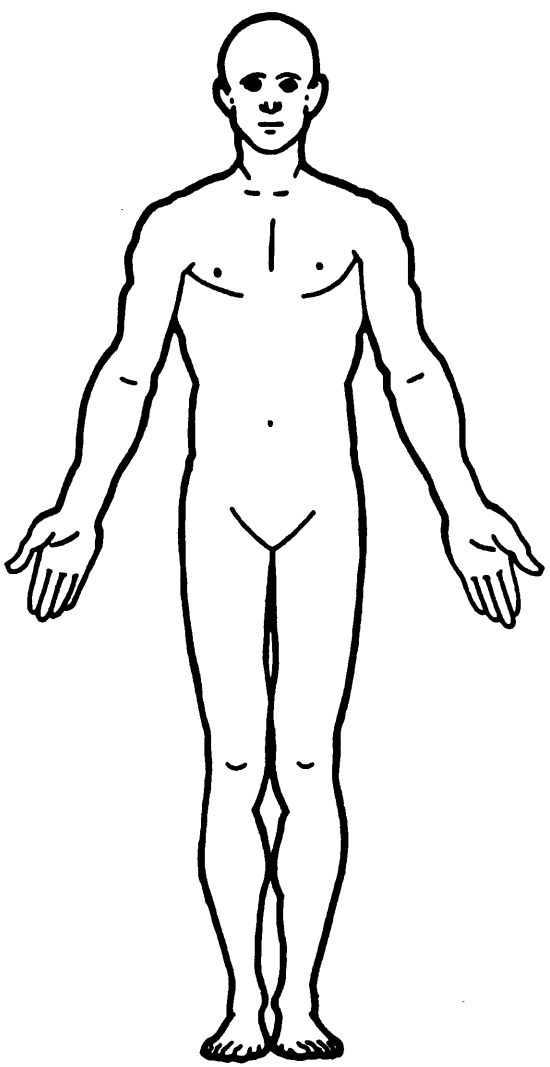

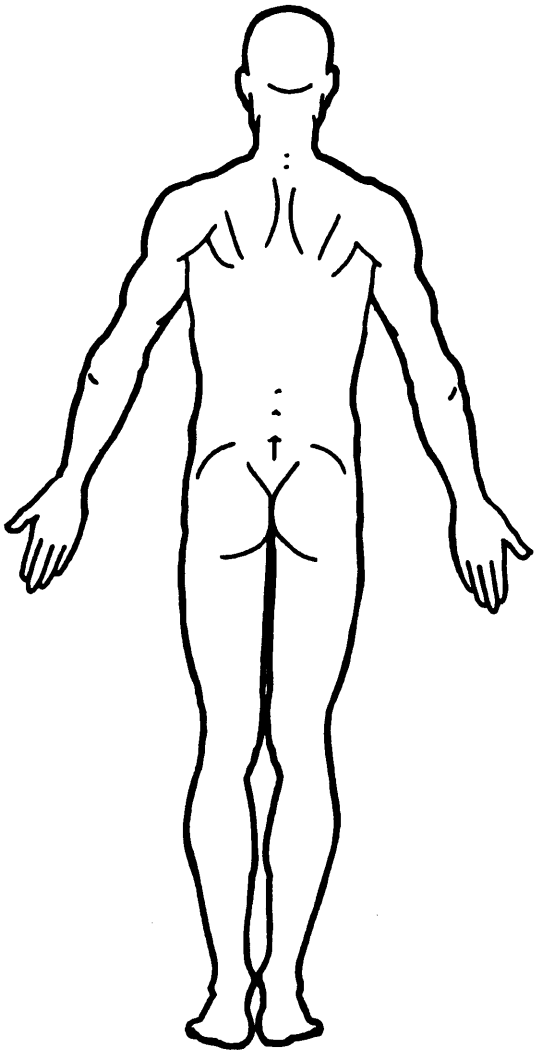

SOURCE OF INJURY DATA

OFFICIAL

(1) Autopsy records with or without hospital/medical records
(2) Hospital/medical records other than emergency room (e.g., discharge summary)
(3) Emergency room records only (including associated X-rays or other lab reports)
(4) Private physician, walk-in or emergency clinic

UNOFFICIAL

(5) Lay coroner report
(6) E.M.S. personnel
(7) Interviewee
(8) Other source (specify): _____
(9) Police

INJURY SOURCE

FRONT

(01) Windshield
(02) Mirror
(03) Sunvisor
(04) Steering wheel rim
(05) Steering wheel hub/spoke
(06) Steering wheel (combination of codes 04 and 05)
(07) Steering column, transmission selector lever, other attachment
(08) Add on equipment (e.g., CB, tape deck, air conditioner)
(09) Left instrument panel and below
(10) Center instrument panel and below
(11) Right instrument panel and below
(12) Glove compartment door
(13) Knee bolster
(14) Windshield including one or more of the following: front header, A (A1/A2)-pillar, instrument panel, mirror, or steering assembly (driver side only)
(15) Windshield including one or more of the following: front header, A (A1/A2)-pillar, instrument panel, or mirror (passenger side only)
(16) Driver side air bag compartment cover
(17) Passenger side air bag compartment cover
(18) Windshield reinforced by exterior object (specify): _____
(19) Other front object (specify): _____

LEFT SIDE

(20) Left side interior surface, excluding hardware or armrests
(21) Left side hardware or armrest
(22) Left A (A1/A2)-pillar
(23) Left B-pillar
(24) Other left pillar (specify): _____
(25) Left side window glass or frame
(26) Left side window glass including one or more of the following: frame, window sill, A (A1/A2)-pillar, B-pillar, or roof side rail.
(27) Other left side object (specify): _____
(28) Left side window sill

RIGHT SIDE

(30) Right side interior surface, excluding hardware or armrests
(31) Right side hardware or armrest
(32) Right A (A1/A2)-pillar
(33) Right B-pillar
(34) Other right pillar (specify): _____
(35) Right side window glass or frame
(36) Right side window glass including one or more of the following: frame, window sill, A (A1/A2)-pillar, B-pillar, or roof side rail.
(37) Other right side object (specify): _____
(38) Right side window sill

INTERIOR

(40) Seat, back support
(41) Belt restraint webbing/buckle
(42) Belt restraint B-pillar or door frame attachment point
(43) Other restraint system component (specify): _____
(44) Head restraint system
(45) Air bag (use codes "16" and "17" for injuries sustained from air bag compartment covers)
(46) Other occupants (specify): _____
(47) Interior loose objects
(48) Child safety seat (specify): _____
(49) Other interior object (specify): _____

ROOF

(50) Front header
(51) Rear header
(52) Roof left side rail
(53) Roof right side rail
(54) Roof or convertible top

FLOOR

(56) Floor (including toe pan)
(57) Floor or console mounted transmission lever, including console
(58) Parking brake handle
(59) Foot controls including parking brake

REAR

(60) Backlight (rear window)
(61) Backlight storage rack, door, etc.
(62) Other rear object (specify): _____

EXTERIOR of OCCUPANT'S VEHICLE

(65) Hood
(66) Outside hardware (e.g., outside mirror, antenna)
(67) Other exterior surface or tires (specify): _____
(68) Unknown exterior objects

EXTERIOR OF OTHER MOTOR VEHICLE

(70) Front bumper
(71) Hood edge
(72) Other front of vehicle (specify): _____
(73) Hood
(74) Hood ornament
(75) Windshield, roof rail, A-pillar
(76) Side surface
(77) Side mirrors
(78) Other side protrusions (specify) _____
(79) Rear surface
(80) Undercarriage
(81) Tires and wheels
(82) Other exterior of other motor vehicle (specify): _____
(83) Unknown exterior of other motor vehicle

OTHER VEHICLE OR OBJECT IN THE ENVIRONMENT

(84) Ground
(85) Other vehicle or object (specify) _____
(86) Unknown vehicle or object

NONCONTACT INJURY

(90) Fire in vehicle
(91) Flying glass
(92) Other noncontact injury source (specify): _____
(93) Air bag exhaust gases
(97) Injured, unknown source

INJURY SOURCE CONFIDENCE LEVEL

(1) Certain
(2) Probable
(3) Possible
(9) Unknown

DIRECT/INDIRECT INJURY

(1) Direct contact injury
(2) Indirect contact injury
(3) Noncontact injury
(7) Injured, unknown source

OCCUPANT INJURY CLASSIFICATION

Body Region

(1) Head
(2) Face
(3) Neck
(4) Thorax
(5) Abdomen
(6) Spine
(7) Upper Extremity
(8) Lower Extremity
(9) Unspecified

Type of Anatomic Structure

(1) Whole Area
(2) Vessels
(3) Nerves
(4) Organs (includes muscles/ligaments)
(5) Skeletal (includes joints)
(6) Head - LOC
(9) Skin

Specific Anatomic Structure

Whole Area

(02) Skin - Abrasion
(04) Skin - Contusion
(06) Skin - Laceration
(08) Skin - Avulsion
(10) Amputation
(20) Burn
(30) Crush
(40) Degloving
(50) Injury - NFS
(90) Trauma, other than mechanical

Head - LOC

(02) Length of LOC
(04, 06, 08) Level of Consciousness
(10) Concussion

Spine

(02) Cervical
(04) Thoracic
(06) Lumbar

Vessels, Nerves, Organs, Bones, Joints are assigned consecutive two digit numbers beginning with 02

Level of Injury

Specific injuries are assigned consecutive two-digit numbers beginning with 02.

To the extent possible, within the organizational framework of the AIS, 00 is assigned to an injury NFS as to severity or where only one injury is given in the dictionary for that anatomic structure. 99 is assigned to any injury NFS as to lesion or severity.

Abbreviated Injury Scale

(1) Minor injury
(2) Moderate injury
(3) Serious injury
(4) Severe injury
(5) Critical injury
(6) Maximum (untreatable)
(7) Injured, unknown severity

Aspect

(1) Right
(2) Left
(3) Bilateral
(4) Central
(5) Anterior
(6) Posterior
(7) Superior
(8) Inferior
(9) Unknown
(0) Whole region

OFFICIAL INJURY DATA — SKELETAL INJURIES

Restrained?

✓ No

___ Yes

Blood Alcohol Level (mg/dl)

BAL = ____

Glasgow Coma Scale Score

GCSS = ____

Units of Blood Given

Units = ____

Arterial Blood Gases

pH = __.__

PO_2 = ____

PCO_2 ____

HCO_3 ____

Indicate the Location, Specific Anatomic Structure, Detail (size, depth, fracture type, head injury clinical signs and neurological deficits), and Source of all injuries indicated by official sources (or from PAR or other unofficial sources if medical records and interviewee data are unavailable.)

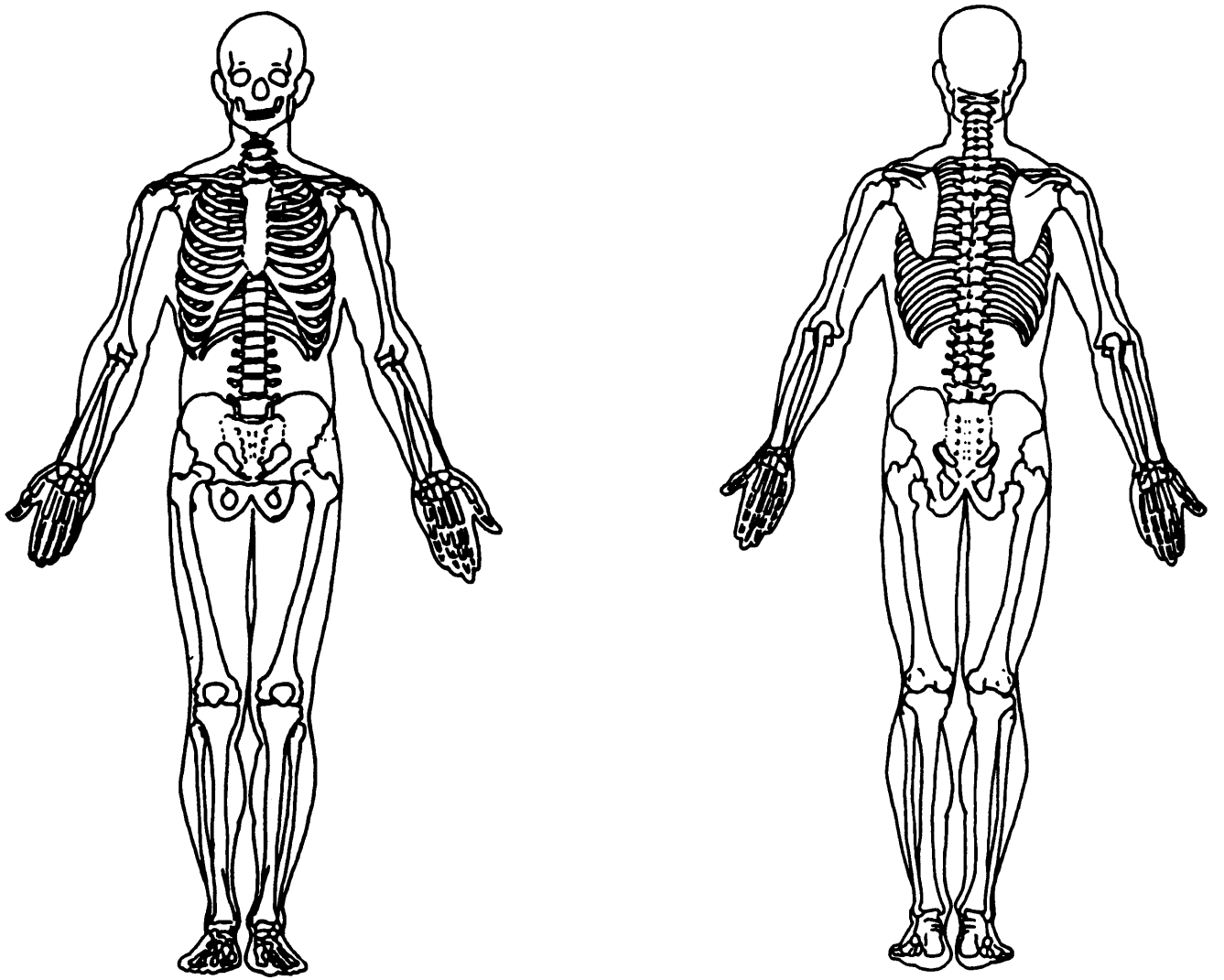

OFFICIAL INJURY DATA —INTERNAL INJURIES

Indicate the Location, Specific Anatomic Structure, Detail (size, depth, fracture type, head injury clinical signs and neurological deficits), and Source of all injuries indicated by official sources (or from PAR or other unofficial sources if medical records and interviewee data are unavailable.)

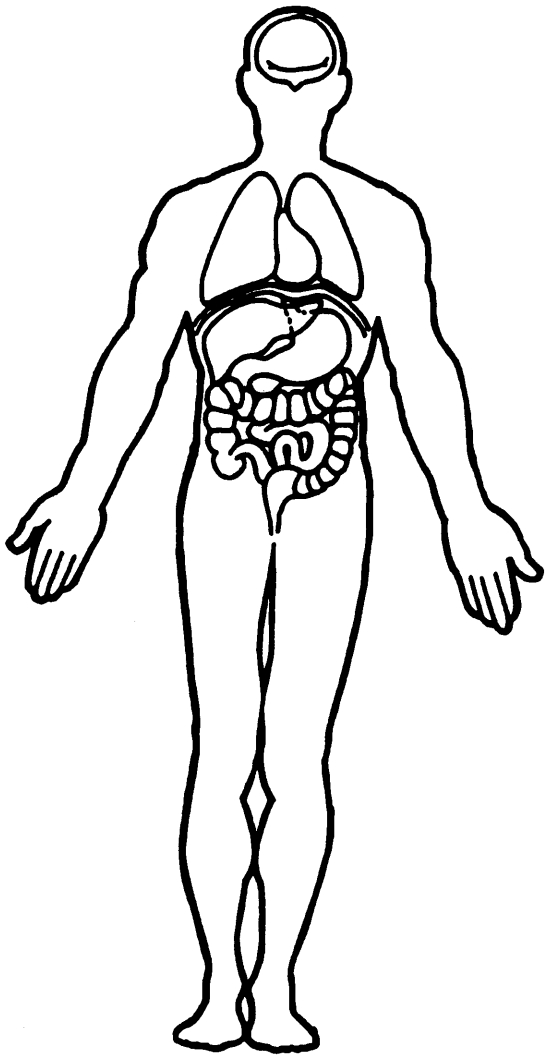

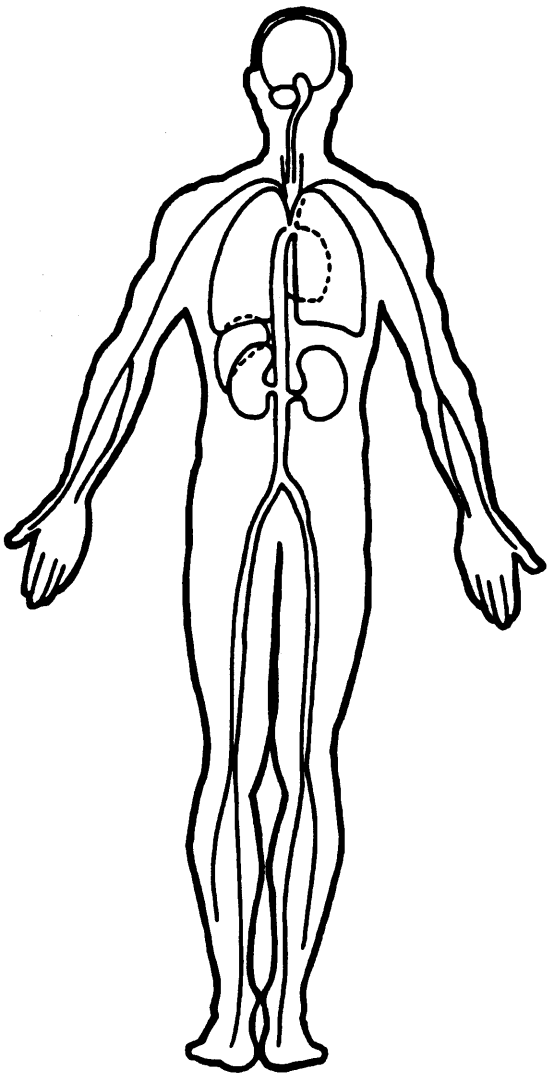

U.S. Department of Transportation

National Highway Traffic Safety Administration

UPDATE FORM

NATIONAL ACCIDENT SAMPLING SYSTEM
CRASHWORTHINESS DATA SYSTEM

1. Primary Sampling Unit Number 05
2. Case Number — Stratum 023E
3. Vehicle Number 01
4. Occupant Number 01

1993 NROT

Driver or Occupant Name: _____

Address: _____

_____

Other Information: _____

_____

(Sanitize this section prior to Update submission.)

STATUS OF LOG INJURY INFORMATION

	INITIAL SUBMISSION	UPDATED INFORMATION
OAL08. Date Official Medical Data Requested		93
OAL09. Date Official Medical Data Obtained		93
OAL16. Injury Treatment Status	5	1
OAL17. Injury Information		
Official		
a. Autopsy (invasive examination)	B	
b. Post-ER medical record which includes information about death based on non-invasive examination	B	
c. Admission record/summary or admission/discharge face sheet	B	
d. Discharge summary	B	
e. Operative report	B	
f. Radiographic record(s) post ER visit	B	
g. History and physical examination and/or consultation records	B	
h. Emergency room records	B 08	01
i. Radiographic record(s) associated with ER visit	B	
j. Private physician	B	
Unofficial		
k. Lay coroner	B	
l. EMS record	B	
m. Interviewee	B	
n. Other source (specify): _____	B	B
o. Police report	B	B

OAL18. Medical Facility Code 01 01

HS Form 433C (Rev. 1/93)

PSU, 05-023 E
V-02

OCCUPANT RELATED

16. Driver Presence in Vehicle 1
(0) Driver not present
(1) Driver present
(9) Unknown

17. Number of Occupants This Vehicle 01
(00-96) Code actual number of occupants for this vehicle
(97) 97 or more
(99) Unknown

18. Number of Occupant Forms Submitted 01

VEHICLE WEIGHT ITEMS

19. Vehicle Curb Weight 1,000
999,82 Code weight to nearest 10 kilograms.
(045) Less than 450 kilograms
(610) 6,100 kilograms or more
(999) Unknown

___ ___,___ ___ ___ lbs X .4536 = ___,___ ___ ___ kgs

Source: _____

20. Vehicle Cargo Weight 0,000
_____ Code weight to nearest 10 kilograms.
(000) Less than 5 kilograms
(450) 4,500 kilograms or more
(999) Unknown

___ ___,___ ___ ___ lbs X .4536 = ___,___ ___ ___ kgs

RECONSTRUCTION DATA

21. Towed Trailing Unit 0
(0) No towed unit
(1) Yes—towed trailing unit
(9) Unknown

22. Documentation of Trajectory Data for This Vehicle 0
(0) No
(1) Yes

23. Post Collision Condition of Tree or Pole (For Highest Delta V) 0
(0) Not collision (for highest delta V) with tree or pole
(1) Not damaged
(2) Cracked/sheared
(3) Tilted <45 degrees
(4) Tilted ≥45 degrees
(5) Uprooted tree
(6) Separated pole from base
(7) Pole replaced
(8) Other (specify): _____
(9) Unknown

24. Rollover 4
(0) No rollover (no overturning)

Rollover (primarily about the longitudinal axis)
(1) Rollover, 1 quarter turn only
(2) Rollover, 2 quarter turns
(3) Rollover, 3 quarter turns
(4) Rollover, 4 or more quarter turns (specify):
Witness states car Rollover 3 Times
Not Likely
(5) Rollover--end-over-end (i.e., primarily about the lateral axis)
(9) Rollover (overturn), details unknown

OVERRIDE/UNDERRIDE (THIS VEHICLE)

25. Front Override/Underride (this Vehicle) 0

26. Rear Override/Underride (this Vehicle) 0

(0) No override/underride, or not an end-to-end impact

Override (see specific CDC)
(1) 1st CDC
(2) 2nd CDC
(3) Other not automated CDC (specify): _____

Underride (see specific CDC)
(4) 1st CDC
(5) 2nd CDC
(6) Other not automated CDC (specify): _____

(7) Medium/heavy truck or bus override
(9) Unknown

HEADING ANGLE AT IMPACT FOR HIGHEST DELTA V

Values: (000)-(359) Code actual value
(997) Noncollision
(998) Impact with object
(999) Unknown

27. Heading Angle For This Vehicle 180

28. Heading Angle For Other Vehicle 090

BEST AVAILABLE

OTHER DATA

56. Driver's Zip Code ___ ___ ___ ___ ___

(00000) Driver not present
(00001) Driver not a resident of U.S. or territories
_____ Code actual 5-digit zip code
(99999) Unknown

57. Driver's Race/Ethnic Origin 9
(0) Driver not present
(1) White (non-Hispanic)
(2) Black (non-Hispanic)
(3) White (Hispanic)
(4) Black (Hispanic)
(5) American Indian, Eskimo or Aleut
(6) Asian or Pacific Islander
(8) Other (specify): _____
(9) Unknown

58. Vehicle Special Use (This Trip) 0
(0) No special use
(1) Taxi
(2) Vehicle used as school bus
(3) Vehicle used as other bus
(4) Military
(5) Police
(6) Ambulance
(7) Fire truck or car
(8) Other (specify): _____
(9) Unknown

ROLLOVER DATA

If GV07 (Body Type) ≠ 1-49, leave GV59-GV63 blank.
If GV24 (Rollover) = 0, then GV59-GV63 must equal 0.
If GV24 = 9, then GV59-GV63 must equal 9.

59. Rollover Initiation Type ~~7~~ 3
(0) No rollover
(1) Trip-over
(2) Flip-over
(3) Turn-over
(4) Climb-over
(5) Fall-over
(6) Bounce-over
(7) Collision with another vehicle
(8) Other rollover initiation type specify): _____
(9) Unknown rollover initiation type

60. Location of Rollover Initiation 1
(0) No rollover
(1) On roadway
(2) On shoulder—paved
(3) On shoulder—unpaved
(4) On roadside or divided trafficway median
(9) Unknown

61. Rollover Initiation Object Contacted 31 ~~01~~

62. Location on Vehicle Where Initial Principal Tripping Force Is Applied ~~2~~ 8
(0) No rollover
(1) Wheels/tires
(2) Side plane
(3) End plane
(4) Undercarriage
(5) Other location on vehicle (specify): _____
(8) Non-contact rollover forces (specify): _____
(9) Unknown

63. Direction of Initial Roll 2
(0) No rollover
(1) Roll right - primarily about the longitudinal axis
(2) Roll left - primarily about the longitudinal axis
(5) End-over-end (i.e., primarily about the lateral axis)
(9) Unknown roll direction

PRECRASH DATA

64. Pre-Event Movement (Prior to Recognition of Critical Event) 01
(01) Going straight
(02) Slowing or stopping in traffic lane
(03) Starting in traffic lane
(04) Stopped in traffic lane
(05) Passing or overtaking another vehicle
(06) Disabled or parked in travel lane
(07) Leaving a parking position
(08) Entering a parking position
(09) Turning right
(10) Turning left
(11) Making a U-turn
(12) Backing up (other than for parking position)
(13) Negotiating a curve
(14) Changing lanes
(15) Merging
(16) Successful avoidance maneuver to a previous critical event
(97) Other (specify): _____
(98) No driver present
(99) Unknown

BEST AVAILABLE COPY

P524,05-023 E
V-02

CODES FOR ROLLOVER INITIATION OBJECT CONTACTED

(00) No rollover
(01-30) — Vehicle Number

Noncollision
(31) Turn-over — fall-over
(33) Jackknife

Collision With Fixed Object
(41) Tree (≤ 10 cm in diameter)
(42) Tree (> 10 cm in diameter)
(43) Shrubbery or bush
(44) Embankment

(45) Breakaway pole or post (any diameter)

Nonbreakaway Pole or Post
(50) Pole or post (≤ 10 cm in diameter)
(51) Pole or post (> 10 cm but ≤ 30 cm in diameter)
(52) Pole or post (> 30 cm in diameter)
(53) Pole or post (diameter unknown)

(54) Concrete traffic barrier
(55) Impact attenuator
(56) Other traffic barrier (includes guardrail) (specify):_____

(57) Fence
(58) Wall
(59) Building
(60) Ditch or culvert
(61) Ground
(62) Fire hydrant
(63) Curb
(64) Bridge
(68) Other fixed object (specify):
_____
(69) Unknown fixed object

Collision with Nonfixed Object
(71) Motor vehicle not in-transport
(76) Animal
(77) Train
(78) Trailer, disconnected in transport
(88) Other nonfixed object (specify):
_____
(89) Unknown nonfixed object

(98) Other event (specify):
_____
(99) Unknown event or object

U.S. Department of Transportation
National Highway Traffic Safety Administration

EXTERIOR VEHICLE FORM

NATIONAL ACCIDENT SAMPLING SYSTEM
CRASHWORTHINESS DATA SYSTEM

1. Primary Sampling Unit Number: 05
2. Case Number - Stratum: 023E
3. Vehicle Number: 02

VEHICLE IDENTIFICATION

VIN: KMHVD12J7MU

Model Year: 91

Vehicle Make (specify): HYUNDAI

Vehicle Model (specify): Excel

LOCATOR

Locate the end of the damage with respect to the vehicle longitudinal center line or bumper corner for end impacts or an undamaged axle for side impacts.

Specific Impact No.	Location of Direct Damage	Location of Field L
1	30 CM forward REAR AXLE	SAME

CRUSH PROFILE IN CENTIMETERS

NOTES: Identify the plane at which the C-measurements are taken (e.g., at bumper, above bumper, at sill, above sill, etc.) and label adjustments (e.g., free space).

Measure and document on the vehicle diagram the location of maximum crush.

Measure C1 to C6 from driver to passenger side in front or rear impacts and rear to front in side impacts.

Free space value is defined as the distance between the baseline and the original body contour taken at the individual C locations. This may include the following: bumper lead, bumper taper, side protrusion, side taper, etc. Record the value for each C-measurement and maximum crush.

Use as many lines/columns as necessary to describe each damage profile.

Specific Impact Number	Plane of Impact C-Measurements	Direct Damage Width (CDC)	Direct Damage Max Crush	Field L	C_1	C_2	C_3	C_4	C_5	C_6	±D
1	RIGHT SIDE	172	-	172	12	17	18	21	17	7	-05
	FREE SPACE		-		-4	-4	-4	-4	-4	-4	
	CRUSH	172	-	172	8	13	14	17	13	3	-05

ORIGINAL SPECIFICATIONS WORK SHEET

Wheelbase	___ ___ ___.___	inches	x 2.54	=	___ ___ ___	cm
Overall Length	___ ___ ___.___	inches	x 2.54	=	___ ___ ___	cm
Maximum Width	___ ___ ___.___	inches	x 2.54	=	___ ___ ___	cm
Curb Weight	___ ___,___ ___ ___	pounds	x .4536	=	___,___ ___ ___	kg
Average Track	___ ___ ___.___	inches	x 2.54	=	___ ___ ___	cm
Front Overhang	___ ___ ___.___	inches	x 2.54	=	___ ___ ___	cm
Rear Overhang	___ ___ ___.___	inches	x 2.54	=	___ ___ ___	cm
Undeformed End Width	___ ___ ___.___	inches	x 2.54	=	___ ___ ___	cm
Engine Size: cyl./displ.	___ ___ ___ ___	cc	x .001	=	___.___	L
	___ ___ ___	CID	x .0164	=	___.___	L

BEST AVAILABLE

VEHICLE DAMAGE SKETCH

TIRE—WHEEL DAMAGE

a. Rotation physically restricted		b. Tire deflated	
RF	2	RF	1
LF	2	LF	2
RR	2	RR	2
LR	2	LR	2

(1) Yes (2) No (8) NA (9) Unk.

TYPE OF TRANSMISSION

☐ Manual ☑ Automatic

ORIGINAL SPECIFICATIONS

Wheelbase	238	cm
Overall Length	409	cm
Maximum Width	161	cm
Curb Weight	999	kg
Average Track	137	cm
Front Overhang	—	cm
Rear Overhang	—	cm
Undeformed End Width	N/A	cm
Engine Size: cyl./displ.	1.5	L

WHEEL STEER ANGLES

(For locked front wheels or displaced rear axles only)

RF ± ___ ___ °
LF ± ___ ___ °
RR ± ___ ___ °
LR ± ___ ___ °

Within ± 5 degrees

DRIVE WHEELS

☑ FWD ☐ RWD ☐ 4WD

Approximate Cargo Weight 000 kg

MEASUREMENTS IN CENTIMETERS

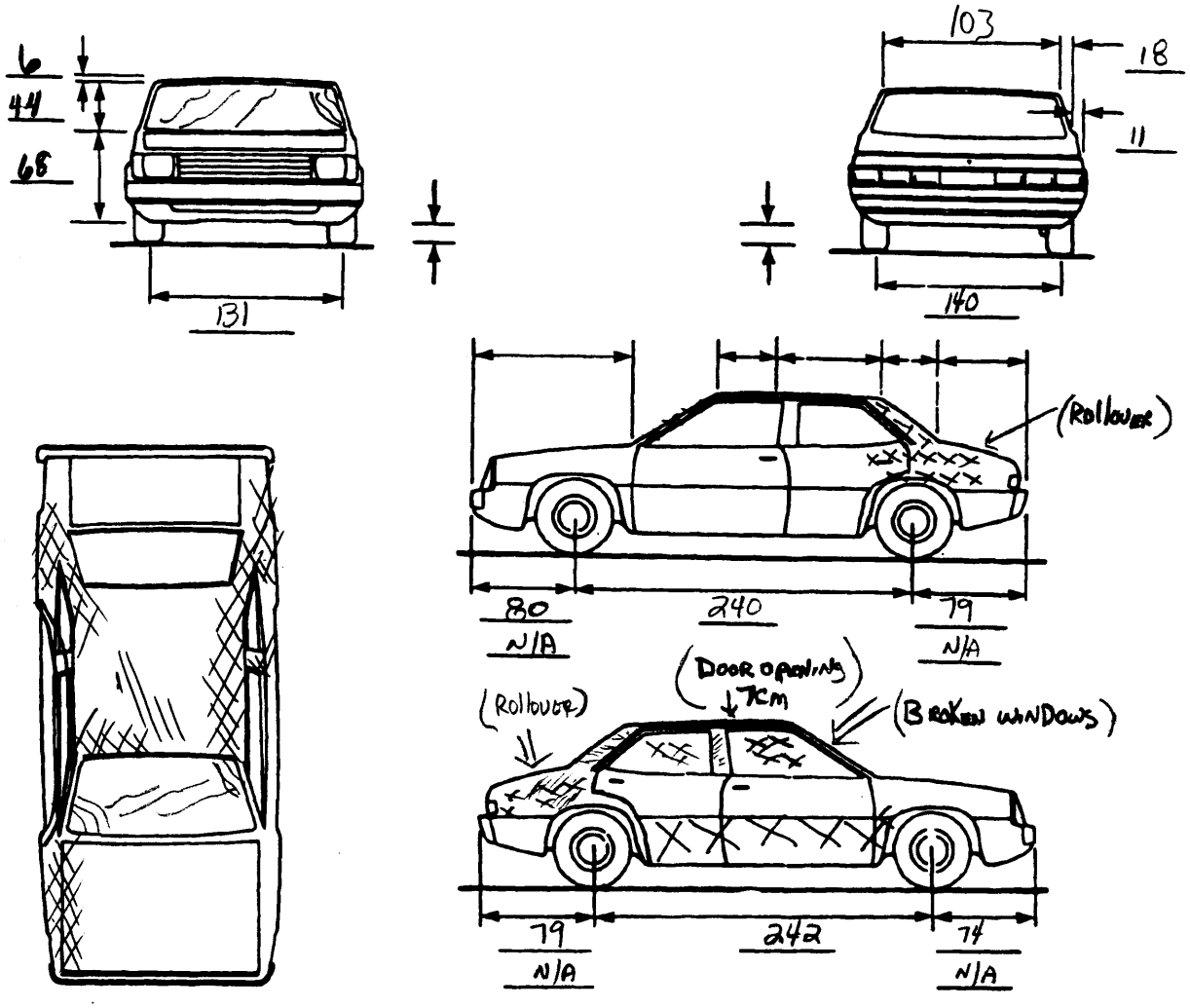

NOTES: Sketch new perimeter and cross hatch direct damage and single hatch induced damage on all views. Annotate observations which might be useful in reconstructing the accident (e.g., grass in tire bead, direction of striations, scuff on sidewalls, etc.). If pulling trailer, sketch type of trailer and damage received on the back of this page.

Annotate any damage caused by extrication such as component removal by torching, prying, or hydraulic shears.

CDC WORKSHEET

CODES FOR OBJECT CONTACTED

(01-30) — Vehicle Number

Noncollision
- (31) Overturn — rollover
- (32) Fire or explosion
- (33) Jackknife
- (34) Other intraunit damage (specify): _____
- (35) Noncollision injury
- (38) Other noncollision (specify): _____
- (39) Noncollision — details unknown

Collision With Fixed Object
- (41) Tree (≤ 10 cm in diameter)
- (42) Tree (> 10 cm in diameter)
- (43) Shrubbery or bush
- (44) Embankment
- (45) Breakaway pole or post (any diameter)

Nonbreakaway Pole or Post
- (50) Pole or post (≤ 10 cm in diameter)
- (51) Pole or post (> 10 cm but ≤ 30 cm in diameter)
- (52) Pole or post (> 30 cm in diameter)
- (53) Pole or post (diameter unknown)
- (54) Concrete traffic barrier
- (55) Impact attenuator
- (56) Other traffic barrier (includes guardrail) (specify): _____
- (57) Fence
- (58) Wall
- (59) Building
- (60) Ditch or culvert
- (61) Ground
- (62) Fire hydrant
- (63) Curb
- (64) Bridge
- (68) Other fixed object (specify): _____
- (69) Unknown fixed object

Collision with Nonfixed Object
- (71) Motor vehicle not in-transport
- (72) Pedestrian
- (73) Cyclist or cycle
- (74) Other nonmotorist or conveyance _____
- (75) Vehicle occupant
- (76) Animal
- (77) Train
- (78) Trailer, disconnected in transport
- (88) Other nonfixed object (specify): _____
- (89) Unknown nonfixed object
- (98) Other event (specify): _____
- (99) Unknown event or object

DEFORMATION CLASSIFICATION BY EVENT NUMBER

Accident Event Sequence Number	Object Contacted	(1) (2) Direction of Force (degrees)	Incremental Value of Shift	(3) Deformation Location	(4) Specific Longitudinal or Lateral Location	(5) Specific Vertical or Lateral Location	(6) Type of Damage Distribution	(7) Deformation Extent
01	01	040	--	R	Y	E	W	02
02	31	000	--	L	D	A	O	01

BEST AVAILABLE COPY

COLLISION DEFORMATION CLASSIFICATION

HIGHEST DELTA "V"

Accident Event Sequence Number	Object Contacted	(1) (2) Direction of Force	(3) Deformation Location	(4) Longitudinal or Lateral Location	(5) Vertical or Lateral Location	(6) Type of Damage Distribution	(7) Deformation Extent
4. 01	5. 01	6. 01	7. R	8. Y	9. E	10. W	11. 02

Second Highest Delta "V"

12. 02	13. 31	14. 00	15. ~~L~~ T	16. D	17. ~~A~~ D	18. O	19. ~~01~~ 02

NASS CODING CHANGE
1st Review: 1A
2nd Review: _____

CRUSH PROFILE IN CENTIMETERS

The crush profile for the damage described in the CDC(s) above should be documented in the appropriate space below. (ALL MEASUREMENTS ARE IN CENTIMETERS.)

HIGHEST DELTA "V"

20. L	21. C_1	C_2	C_3	C_4	C_5	C_6	22. ±D
172	008	013	014	017	013	003	± 005

Second Highest Delta "V"

23. L	24. C_1	C_2	C_3	C_4	C_5	C_6	25. ±D
							+ −

26. Are CDCs Documented but Not Coded on The Automated File? 0
(0) No
(1) Yes

27. Researcher's Assessment of Vehicle Disposition 1
(0) Not towed due to vehicle damage
(1) Towed due to vehicle damage
(9) Unknown

28. Original Wheelbase 238
_____ Code to the nearest centimeter
(999) Unknown

_____ . ___ inches X 2.54 = _____ centimeters

29. Is This A Multi-Stage Manufactured Vehicle And/Or A Certified Altered Vehicle? 0
    (0) No post manufacturer modifications
    (1) Yes - post manufacturer modifications (specify): _____
    _____
    _____
    (Include photograph of CERTIFICATION PLACARD in case report)
    (9) Unknown if vehicle is modified

30. Fire Occurrence 0
    (0) No fire

    Yes, fire occurred
    (1) Minor
    (2) Major
    (9) Unknown

31. Origin of Fire 0
    (0) No fire
    (1) Vehicle exterior (front, side, back, top)
    (2) Exhaust system
    (3) Fuel tank (and other fuel retention system parts)
    (4) Engine compartment
    (5) Cargo/trunk compartment
    (6) Instrument panel
    (7) Passenger compartment area
    (8) Other location (specify): _____
    (9) Unknown

32. Type of Fuel Tank 1
    (0) No fuel tank (electrical vehicle)
    (1) Metallic
    (2) Non-metallic
    (9) Unknown

*** STOP: IF THE CDS APPLICABLE VEHICLE WAS NOT TOWED AND WAS NOT AN AOPS *** (I.E., GV09=0 OR 9 AND GV36=0), DO NOT COMPLETE THE INTERIOR VEHICLE FORM.

U.S. Department of Transportation
National Highway Traffic Safety Administration

INTERIOR VEHICLE FORM

NATIONAL ACCIDENT SAMPLING SYSTEM
CRASHWORTHINESS DATA SYSTEM

1. Primary Sampling Unit Number 05
2. Case Number - Stratum 023 E
3. Vehicle Number 02

INTEGRITY

4. Passenger Compartment Integrity 06

(00) No integrity loss

Yes, Integrity Was Lost Through
(01) Windshield
(02) Door (side)
(03) Door/hatch (back door)
(04) Roof
(05) Roof glass
(06) Side window
(07) Rear window (backlight)
(08) Roof and roof glass
(09) Windshield and door (side)
(10) Windshield and roof
(11) Side and rear window (side window and backlight)
(12) Windshield and side window
(13) Door and side window
(98) Other combination of above (specify): _____
(99) Unknown

Door, Tailgate or Hatch Opening

5. LF 1 6. RF 3 7. LR 0 8. RR 0 9. TG/H 1

(0) No door/gate/hatch
(1) Door/gate/hatch remained closed and operational
(2) Door/gate/hatch came open during collision
(3) Door/gate/hatch jammed shut
(8) Other (specify): _____
(9) Unknown

Damage/Failure Associated with Door, Tailgate or Hatch Opening in Collision. If IV05-IV09 ≠ 2, Then code Ø

10. LF 0 11. RF 0 12. LR 0 13. RR 0 14. TG/H 0

(0) No door/gate/hatch or door not opened

Door, Tailgate or Hatch Came Open During Collision
(1) Door operational (no damage)
(2) Latch/striker failure due to damage
(3) Hinge failure due to damage
(4) Door structure failure due to damage
(5) Door support (i.e., pillar, sill, roof side rail, etc.) failure due to damage
(6) Latch/striker and hinge failure due to damage
(8) Other failure (specify): _____
(9) Unknown

GLAZING

Glazing Damage from Impact Forces

15. WS 2 16. LF 0 17. RF 6 18. LR 0 19. RR 6
20. BL 0 21. Roof 8 22. Other 8

(0) No glazing damage from impact forces
(2) Glazing in place and cracked from impact forces
(3) Glazing in place and holed from impact forces
(4) Glazing out-of-place (cracked or not) and not holed from impact forces
(5) Glazing out-of-place and holed from impact forces
(6) Glazing disintegrated from impact forces
(7) Glazing removed prior to accident
(8) No glazing
(9) Unknown if damaged

Glazing Damage from Occupant Contact

23. WS 0 24. LF 0 25. RF 0 26. LR 0 27. RR 0
28. BL 0 29. Roof 0 30. Other 0

(0) No occupant contact to glazing or no glazing
(1) Glazing contacted by occupant but no glazing damage
(2) Glazing in place and cracked by occupant contact
(3) Glazing in place and holed by occupant contact
(4) Glazing out-of-place (cracked or not) by occupant contact and not holed by occupant contact
(5) Glazing out-of-place by occupant contact and holed by occupant contact
(6) Glazing disintegrated by occupant contact
(9) Unknown if contacted by occupant

If No Glazing Damage *And* No Occupant Contact or No Glazing, Then Code IV31 Through IV46 As Ø

Type of Window/Windshield Glazing

31. WS 1 32. LF 0 33. RF 2 34. LR 0 35. RR 2
36. BL 0 37. Roof 0 38. Other 0

(0) No glazing contact and no damage, or no glazing
(1) AS-1 — Laminated
(2) AS-2 — Tempered
(3) AS-3 — Tempered-tinted
(4) AS-14 — Glass/Plastic
(8) Other (specify): _____
(9) Unknown

Window Precrash Glazing Status

39. WS 1 40. LF 0 41. RF 2 42. LR 0 43. RR 2
44. BL 0 45. Roof 0 46. Other 0

(0) No glazing contact and no damage, or no glazing
(1) Fixed
(2) Closed
(3) Partially opened
(4) Fully opened
(9) Unknown

INTRUSION WORKSHEET

Note: Sketch intruded areas

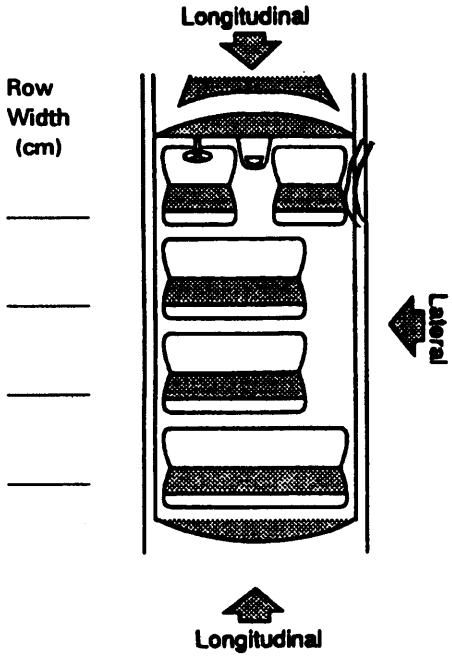

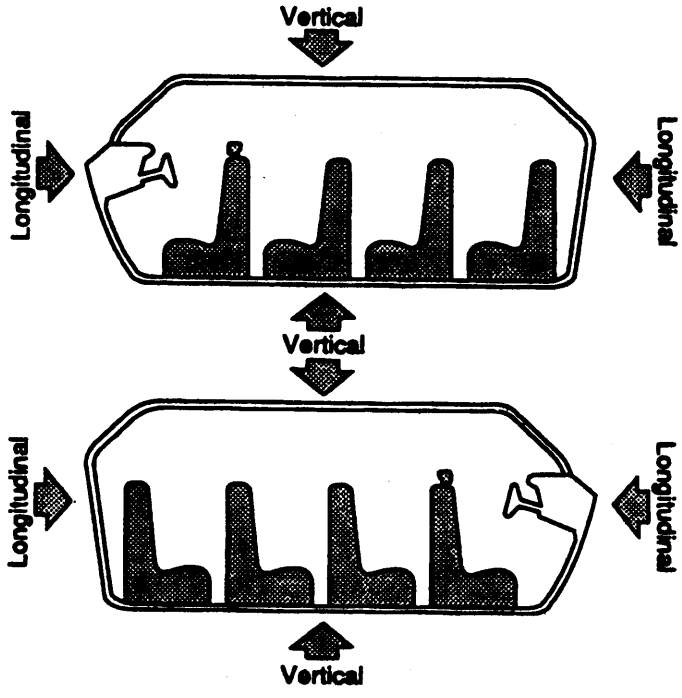

LOCATION OF INTRUSION	INTRUDED COMPONENT	(All Measurements Are In Centimeters) COMPARISON VALUE	–	INTRUDED VALUE	=	INTRUSION	DOMINANT CRUSH DIRECTION
13	Door panel	~70	–	61	=	9	LAT
			–		=		
			–		=		
			–		=		
			–		=		
			–		=		
			–		=		
			–		=		
			–		=		
			–		=		
			–		=		
			–		=		
			–		=		
			–		=		
			–		=		

Document no more than the 15 most severe intrusions

OCCUPANT AREA INTRUSION

Note: If no intrusions, leave variables IV47-IV86 blank.

	Location of Intrusion	Intruding Component	Magnitude of Intrusion	Dominant Crush Direction
1st	47. 13	48. 10	49. 2	50. 3
2nd	51.___	52.___	53.___	54.___
3rd	55.___	56.___	57.___	58.___
4th	59.___	60.___	61.___	62.___
5th	63.___	64.___	65.___	66.___
6th	67.___	68.___	69.___	70.___
7th	71.___	72.___	73.___	74.___
8th	75.___	76.___	77.___	78.___
9th	79.___	80.___	81.___	82.___
10th	83.___	84.___	85.___	86.___

LOCATION OF INTRUSION

Front Seat
- (11) Left
- (12) Middle
- (13) Right

Second Seat
- (21) Left
- (22) Middle
- (23) Right

Third Seat
- (31) Left
- (32) Middle
- (33) Right

Fourth Seat
- (41) Left
- (42) Middle
- (43) Right

- (97) Catastrophic
- (98) Other enclosed area (specify) _____
- (99) Unknown

INTRUDING COMPONENT

Interior Components
- (01) Steering assembly
- (02) Instrument panel left
- (03) Instrument panel center
- (04) Instrument panel right
- (05) Toe pan
- (06) A (A1/A2)-pillar
- (07) B-pillar
- (08) C-pillar
- (09) D-pillar
- (10) Door panel (side)
- (12) Roof (or convertible top)
- (13) Roof side rail
- (14) Windshield
- (15) Windshield header
- (16) Window frame
- (17) Floor pan (includes sill)
- (18) Backlight header
- (19) Front seat back
- (20) Second seat back
- (21) Third seat back
- (22) Fourth seat back
- (23) Fifth seat back
- (24) Seat cushion
- (25) Back door/panel (e.g., tailgate)
- (26) Other interior component (specify): _____
- (27) Side panel - forward of the A (A2)-pillar
- (28) Side panel - rear of the A (A2)-pillar

Exterior Components
- (30) Hood
- (31) Outside surface of this vehicle (specify): _____
- (32) Other exterior object in the environment (specify): _____
- (33) Unknown exterior object
- (97) Catastrophic
- (98) Intrusion of unlisted component(s) (specify): _____
- (99) Unknown

MAGNITUDE OF INTRUSION

- (1) ≥ 3 centimeters but < 8 centimeters
- (2) ≥ 8 centimeters but < 15 centimeters
- (3) ≥ 15 centimeters but < 30 centimeters
- (4) ≥ 30 centimeters but < 46 centimeters
- (5) ≥ 46 centimeters but < 61 centimeters
- (6) ≥ 61 centimeters
- (7) Catastrophic
- (9) Unknown

DOMINANT CRUSH DIRECTION

- (1) Vertical
- (2) Longitudinal
- (3) Lateral
- (7) Catastrophic
- (9) Unknown

STEERING RIM/SPOKE DEFORMATION

(All Measurements Are in Centimeters)

COMPARISON VALUE	—	DAMAGE VALUE	=	DEFORMATION
	—		=	
	—		=	
	—		=	
	—		=	

STEERING COLUMN

87. Steering Column Type 1
(1) Fixed column
(2) Tilt column
(3) Telescoping column
(4) Tilt and telescoping column
(8) Other column type (specify): _____
(9) Unknown

88. Blank X X
(This variable is left blank so that numbering consistency can be maintained with the 1988-93 CDS.

89. Blank X X X
(This variable is left blank so that numbering consistency can be maintained with the 1988-93 CDS.

90. Blank X X X
(This variable is left blank so that numbering consistency can be maintained with the 1988-93 CDS.

91. Blank X X X
(This variable is left blank so that numbering consistency can be maintained with the 1988-93 CDS.

92. Steering Rim/Spoke Deformation 00
____Code actual measured deformation to the nearest centimeter
(00) No steering rim deformation
(01-14) Actual measured value in centimeters
(15) 15 centimeters or more
(98) Observed deformation cannot be measured
(99) Unknown

93. Location of Steering Rim/Spoke Deformation 00
(00) No steering rim deformation

Quarter Sections
(01) Section A
(02) Section B
(03) Section C
(04) Section D

Half Sections
(05) Upper half of rim/spoke
(06) Lower half of rim/spoke
(07) Left half of rim/spoke
(08) Right half of rim/spoke

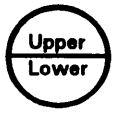

(09) Complete steering wheel collapse
(10) Undetermined location
(99) Unknown

INSTRUMENT PANEL

94. Odometer Reading 021,000
2060708 kilometers—Code to the nearest 1,000 kilometers
(000) No odometer
(001) Less than 1,500 kilometers
(500) 499,500 kilometers or more
(999) Unknown

12,805 miles X 1.6093 = ___,___ kilometers

Source: Inspection

95. Instrument Panel Damage from Occupant Contact? 0
(0) No
(1) Yes
(9) Unknown

96. Knee Bolsters Deformed from Occupant Contact? 8
(0) No
(1) Yes
(8) Not present
(9) Unknown

97. Did Glove Compartment Door Open During Collision(s)? 0
(0) No
(1) Yes
(8) Not present
(9) Unknown

VEHICLE INTERIOR SKETCHES

Note area of ejection/entrapment

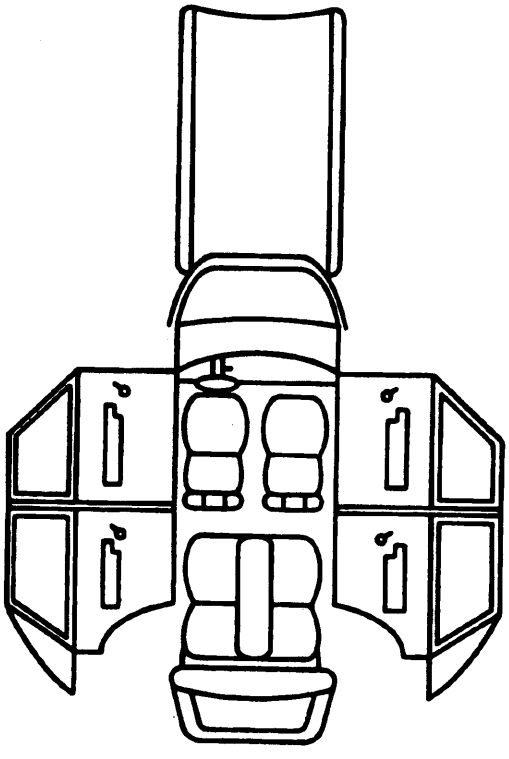

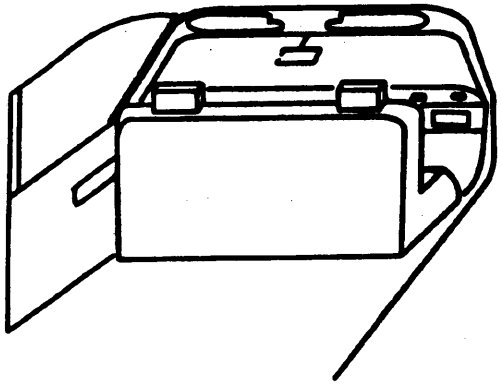

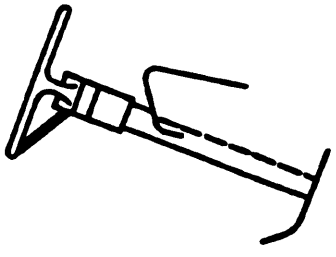

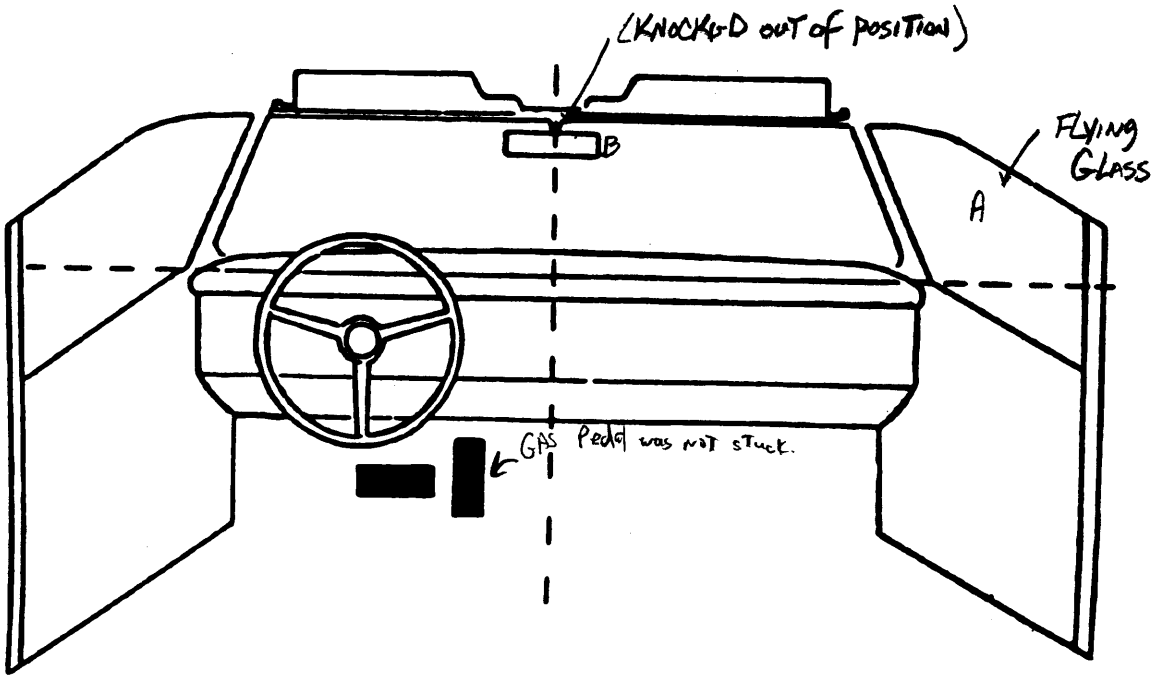

Sketch windshield contact(s) and the damaged area(s) on the instrument panel outline (e.g., radio, glove compartment, damage to instrument panel structure.
Cross hatch contact points, draw spider webs or use other annotation as may be appropriate.
Annotate the contacted area with a letter (begin with A) and list on the Points of Occupant Contact page.

POINTS OF OCCUPANT CONTACT

Contact	Interior Component Contacted	Occupant No. If Known	Body Region If Known	Supporting Physical Evidence	Confidence Level of Contact Point
A	35	#1	FACE	Flying Glass	3
B	02	#1	Head	Knocked out of Position	3
C					
D					
E					
F					
G					
H					
I					
J					
K					
L					
M					
N					

CODES FOR INTERIOR COMPONENTS

FRONT

(01) Windshield
(02) Mirror
(03) Sunvisor
(04) Steering wheel rim
(05) Steering wheel hub/spoke
(06) Steering wheel (combination of codes 04 and 05)
(07) Steering column, transmission selector lever, other attachment
(08) Add on equipment (e.g., CB, tape deck, air conditioner)
(09) Left instrument panel and below
(10) Center instrument panel and below
(11) Right instrument panel and below
(12) Glove compartment door
(13) Knee bolster
(14) Windshield including one or more of the following: front header, A (A1/A2)-pillar, instrument panel, mirror, or steering assembly (driver side only)
(15) Windshield including one or more of the following: front header, A (A1/A2)-pillar, instrument panel, or mirror (passenger side only)
(16) Driver side air bag compartment cover
(17) Passenger side air bag compartment cover
(18) Windshield reinforced by exterior object (specify):_____
(19) Other front object (specify):
_____

LEFT SIDE

(20) Left side interior surface, excluding hardware or armrests
(21) Left side hardware or armrest
(22) Left A (A1/A2)-pillar
(23) Left B-pillar
(24) Other left pillar (specify):
_____
(25) Left side window glass or frame
(26) Left side window glass including one or more of the following: frame, window sill, A (A1/A2)-pillar, B-pillar, or roof side rail.
(27) Other left side object (specify):
_____
(28) Left side window sill

RIGHT SIDE

(30) Right side interior surface, excluding hardware or armrests
(31) Right side hardware or armrest
(32) Right A (A1/A2)-pillar
(33) Right B-pillar
(34) Other right pillar (specify):
_____
(35) Right side window glass or frame
(36) Right side window glass including one or more of the following: frame, window sill, A (A1/A2)-pillar, B pillar, or roof side rail.
(37) Other right side object (specify):
_____
(38) Right side window sill

INTERIOR

(40) Seat, back support
(41) Belt restraint webbing/buckle
(42) Belt restraint B-pillar attachment point
(43) Other restraint system component (specify):_____
(44) Head restraint system
(45) Air bag (use codes "16" and "17" for injuries sustained from air bag compartment covers)
(46) Other occupants (specify):
_____
(47) Interior loose objects
(48) Child safety seat (specify):
_____
(49) Other interior object (specify):
_____

ROOF

(50) Front header
(51) Rear header
(52) Roof left side rail
(53) Roof right side rail
(54) Roof or convertible top

FLOOR

(56) Floor (including toe pan)
(57) Floor or console mounted transmission lever, including console
(58) Parking brake handle
(59) Foot controls including parking brake

REAR

(60) Backlight (rear window)
(61) Backlight storage rack, door, etc.
(62) Other rear object (specify):
_____

CONFIDENCE LEVEL OF CONTACT POINT

(1) Certain
(2) Probable
(3) Possible
(9) Unknown

AUTOMATIC RESTRAINTS

NOTES: Encode the data for each applicable front seat position. The attribute for the variables may be found below. Restraint systems should be assessed during the vehicle inspection then coded on the Occupant Assessment Form.

AIR BAGS

		Left	Right
FIRST	Availability/Function		
	Deployment		
	Failure		

Air Bag System Availability/Function
(0) Not equipped/not available
(1) Air bag

Non-functional
(2) Air bag disconnected (specify): _____
(3) Air bag not reinstalled
(9) Unknown

Air Bag System Deployment
(0) Not equipped/not available
(1) Air bag deployed during accident (as a result of impact)
(2) Air bag deployed inadvertently just prior to accident
(3) Air bag deployed, accident sequence undetermined
(4) Nondeployed
(5) Unknown if deployed
(6) Air bag deployed as a result of a noncollision event during accident sequence (e.g., fire, explosion, electrical)
(9) Unknown

Did Air Bag System Fail?
(0) Not equipped/not available
(1) No
(2) Yes (specify): _____
(9) Unknown

AUTOMATIC BELTS

		Left	Right
FIRST	Availability/Function	1	1
	Use	2	2
	Type	2	2
	Proper Use	0	0
	Failure Modes	0	0

Automatic (Passive) Belt System Availability/Function
(0) Not equipped/not available
(1) 2 point automatic belts
(2) 3 point automatic belts
(3) Automatic belts - type unknown

Non-functional
(4) Automatic belts destroyed or rendered inoperative
(9) Unknown

Automatic (Passive) Belt System Use
(0) Not equipped/not available/destroyed or rendered inoperative
(1) Automatic belt in use
(2) Automatic belt not in use (manually disconnected, motorized track inoperative)
(3) Automatic belt use unknown
(9) Unknown

Automatic (Passive) Belt System Type
(0) Not equipped/not available
(1) Non-motorized system
(2) Motorized system
(9) Unknown

Proper Use of Automatic (Passive) Belt System
(0) Not equipped/not available/not used
(1) Automatic belt used properly
(2) Automatic belt used properly with child safety seat

Automatic Belt Used Improperly
(3) Automatic shoulder belt worn under arm
(4) Automatic shoulder belt worn behind back
(5) Automatic belt worn around more than one person
(6) Lap portion of automatic belt worn on abdomen
(7) Automatic lap and shoulder belt or automatic shoulder belt used improperly with child safety seat (specify): _____
(8) Other improper use of automatic belt system (specify): _____
(9) Unknown

Automatic (Passive) Belt Failure Modes During Accident
(0) Not equipped/not available/not in use
(1) No automatic belt failure(s)
(2) Torn webbing (stretched webbing not included)
(3) Broken buckle or latchplate
(4) Upper anchorage separated
(5) Other anchorage separated (specify): _____
(6) Broken retractor
(7) Combination of above (specify):
(8) Other automatic belt failure (specify): _____
(9) Unknown

MANUAL RESTRAINTS

NOTES: Encode the applicable data **for each seat position** in the vehicle. The attribute for the variable may be found below. Restraint systems should be assessed during the vehicle inspection then coded on the Ocupant Assessment Form.

If a Child safety seat is present, encode the data on the back of this page.

If the vehicle has automatic restraints available, encode the appropriate data on the back of the previous page.

		Left	Center	Right
FIRST	Availability	3	0	3
	Use	00	0	00
	Failure Modes	0	0	0
SECOND	Availability	4	3	4
	Use	00	00	00
	Failure Modes	0	0	0
THIRD	Availability			
	Use			
	Failure Modes			
OTHER	Availability			
	Use			
	Failure Modes			

Manual (Active) Belt System Availability

(0) None available
(1) Belt removed/destroyed
(2) Shoulder belt
(3) Lap belt
(4) Lap and shoulder belt
(5) Belt available - type unknown

Integral Belt Partially Destroyed

(6) Shoulder belt (lap belt destroyed/removed)
(7) Lap belt (shoulder belt destroyed/removed)
(8) Other belt (specify): _____
(9) Unknown

Manual (Active) Belt System Use

(00) None used, not available, or belt removed/destroyed
(01) Inoperable (specify): _____
(02) Shoulder belt
(03) Lap belt
(04) Lap and shoulder belt
(05) Belt used - type unknown
(08) Other belt used (specify): _____
(12) Shoulder belt used with child safety seat
(13) Lap belt used with child safety seat
(14) Lap and shoulder belt used with child safety seat
(15) Belt used with child safety seat - type unknown
(18) Other belt used with child safety seat (specify): _____
(99) Unknown if belt used

Manual (Active) Belt Failure Modes During Accident

(0) No manual belt used or not available
(1) No manual belt failure(s)
(2) Torn webbing (stretched webbing not included)
(3) Broken buckle or latchplate
(4) Upper anchorage separated
(5) Other anchorage separated (specify): _____
(6) Broken retractor
(7) Combination of above (specify): _____
(8) Other manual belt failure (specify): _____
(9) Unknown

CHILD SAFETY SEAT FIELD ASSESSMENT

When a child safety seat is present enter the occupant's number in the first row and complete the column below the occupant's number using the codes listed below. Complete a column for each child safety seat present.

Occupant Number						
1. Type of Child Safety Seat						
2. Child Safety Seat Orientation						
3. Child Safety Seat Harness Usage						
4. Child Safety Seat Shield Uasge						
5. Child Safety Seat Tether Usage						
6. Child Safety Seat Make/Model	Specify Below for Each Child Safety Seat					

1. Type of Child Safety Seat
   - (0) No child safety seat
   - (1) Infant seat
   - (2) Toddler seat
   - (3) Convertible seat
   - (4) Booster seat
   - (7) Other type child safety seat (specify): _____
   - (8) Unknown child safety seat type
   - (9) Unknown if child safety seat used

2. Child Safety Seat Orientation
   - (00) No child safety seat

   Designed for Rear Facing for This Age/Weight
   - (01) Rear facing
   - (02) Forward facing
   - (08) Other orientation (specify): _____
   - (09) Unknown orientation

   Designed for Forward Facing for This Age/Weight
   - (11) Rear facing
   - (12) Forward facing
   - (18) Other orientation (specify): _____
   - (19) Unknown orientation

   Unknown Design or Orientation For This Age/Weight, or Unknown Age/Weight
   - (21) Rear facing
   - (22) Forward facing
   - (28) Other orientation (specify): _____
   - (29) Unknown orientation

   (99) Unknown if child safety seat used

3. Child Safety Seat Harness Usage

4. Child Safety Seat Shield Usage

5. Child Safety Seat Tether Usage
   Note: Options Below Are Used for Variables 3-5.

   (00) No child safety seat

   Not Designed with Harness/Shield/Tether
   - (01) After market harness/shield/tether added, not used
   - (02) After market harness/shield/tether used
   - (03) Child safety seat used, but no after market harness/shield/tether added
   - (09) Unknown if harness/shield/tether added or used

   Designed With Harness/Shield/Tether
   - (11) Harness/shield/tether not used
   - (12) Harness/shield/tether used
   - (19) Unknown if harness/shield/tether used

   Unknown If Designed With Harness/Shield/Tether
   - (21) Harness/shield/tether not used
   - (22) Harness/shield/tether used
   - (29) Unknown if harness/shield/tether used

   (99) Unknown if child safety seat used

6. Child Safety Seat Make/Model
   (Specify make/model and occupant number)

   _____

   _____

   _____

   _____

HEAD RESTRAINTS/SEAT EVALUATION

NOTES: Encode the applicable data for **each seat position** in the vehicle. The attribute for these variables may be found at the bottom of the page. Head restraint type/damage and seat type/performance should be assessed during the vehicle inspection then coded on the Occupant Assessment Form.

		Left	Center	Right
FIRST	Head Restraint Type/Damage	3		3
	Seat Type	02		02
	Seat Performance	1		1
	Seat Orientation	1		1
SECOND	Head Restraint Type/Damage	1	0	1
	Seat Type	05	05	05
	Seat Performance	1	1	1
	Seat Orientation	1	1	1
THIRD	Head Restraint Type/Damage			
	Seat Type			
	Seat Performance			
	Seat Orientation			
OTHER	Head Restraint Type/Damage			
	Seat Type			
	Seat Performance			
	Seat Orientation			

Head Restraint Type/Damage by Occupant at This Occupant Position

(0) No head restraints
(1) Integral — no damage
(2) Integral — damaged during accident
(3) Adjustable — no damage
(4) Adjustable — damaged during accident
(5) Add-on — no damage
(6) Add-on — damaged during accident
(8) Other Specify): _____
(9) Unknown

Seat Type (this Occupant Position)

(00) Occupant not seated or no seat
(01) Bucket
(02) Bucket with folding back
(03) Bench
(04) Bench with separate back cushions
(05) Bench with folding back(s)
(06) Split bench with separate back cushions
(07) Split bench with folding back(s)
(08) Pedestal (i.e., column supported)
(09) Other seat type (specify): _____
(10) Box mounted seat (i.e., van type)
(99) Unknown

Seat Performance (this Occupant Position)

(0) Occupant not seated or no seat
(1) No seat performance failure(s)
(2) Seat adjusters failed
(3) Seat back folding locks or "seat back" failed specify: _____
(4) Seat tracks/anchors failed
(5) Deformed by impact of occupant
(6) Deformed by passenger compartment intrusion (specify): _____
(7) Combination of above (specify): _____
(8) Other (specify): _____
(9) Unknown

Seat Orientation (this Occupant Position)

(0) Occupant not seated or no seat
(1) Forward facing seat
(2) Rear facing seat
(3) Side facing seat (inward)
(4) Side facing seat (outward)
(8) Other (specify): _____
(9) Unknown

DESCRIBE ANY INDICATION OF ABNORMAL OCCUPANT POSTURE (I.E., UNUSUAL OCCUPANT CONTACT PATTERN)

EJECTION/ENTRAPMENT DATA

Complete the following if the researcher has any indication that an occupant was either ejected from or entrapped in the vehicle. Code the appropriate data on the Occpant Assessment Form.

EJECTION No [✓] Yes [ ]

Describe indications of ejection and body parts involved in partial ejection(s):

_____

_____

_____

_____

_____

Occupant Number						
Ejection						
(Note on Vehicle Interior Sketch) Ejection Area						
Ejection Medium						
Medium Status						

Ejection
- (1) Complete ejection
- (1) Partial ejection
- (3) Ejection, Unknown degree
- (9) Unknown

Ejection Area
- (1) Windshield
- (2) Left front
- (3) Right front
- (4) Left rear
- (5) Right rear
- (6) Rear
- (7) Roof
- (8) Other area (e.g., back of pickup, etc.) (specify): _____
- (9) Unknown

Ejection Medium
- (1) Door/hatch/tailgate
- (2) Nonfixed roof structure
- (3) Fixed glazing
- (4) Nonfixed glazing (specify): _____
- (5) Integral structure
- (8) Other medium (specify): _____
- (9) Unknown

Medium Status (Immediately Prior to Impact)
- (1) Open
- (2) Closed
- (3) Integral structure
- (9) Unknown

ENTRAPMENT No [✓] Yes [ ]

Describe entrapment mechanism: _____

_____

_____

_____

_____

Component(s): _____

_____

(Note in vehicle interior diagram)

U.S. Department of Transportation
National Highway Traffic Safety Administration

OCCUPANT ASSESSMENT FORM

Form Approved
O.M.B. No. 2127-0021

NATIONAL ACCIDENT SAMPLING SYSTEM
CRASHWORTHINESS DATA SYSTEM

1. Primary Sampling Unit Number 05
2. Case Number - Stratum 023 E
3. Vehicle Number 02
4. Occupant Number 01

OCCUPANT'S CHARACTERISTICS

5. Occupant's Age 38
Code actual age at time of accident.
(00) Less than one year old (specify by month): _____
(97) 97 years and older
(99) Unknown

6. Occupant's Sex 2
(1) Male
(2) Female
(9) Unknown

7. Occupant's Height 140
Code actual height to the nearest centimeter.
(999) Unknown

___ ___ inches X 2.54 = ___ ___ ___ centimeters

8. Occupant's Weight 044
Code actual weight to the nearest kilogram.
(999)Unknown

___ ___ ___ pounds X .4536 = ___ ___ ___ kilograms

9. Occupant's Role 1
(1) Driver
(2) Passenger
(9) Unknown

OCCUPANT'S SEATING

10. Occupant's Seat Position 11

Front Seat
(11) Left side
(12) Middle
(13) Right side
(14) Other (specify): _____
(15) On or in the lap of another occupant

Second Seat
(21) Left side
(22) Middle
(23) Right side
(24) Other (specify): _____
(25) On or in the lap of another occupant

Third Seat
(31) Left side
(32) Middle
(33) Right side
(34) Other (specify): _____
(35) On or in the lap of another occupant

Fourth Seat
(41) Left side
(42) Middle
(43) Right side
(44) Other (specify): _____
(45) On or in the lap of another occupant

(97) In or on unenclosed area
(98) Other seat (specify): _____
(99) Unknown

11. Occupant's Posture 0
(0) Normal posture

Abnormal posture
(1) Kneeling or standing on seat
(2) Lying on or across seat
(3) Kneeling, standing or sitting in front of seat
(4) Sitting sideways or turned to talk with another occupant or to look out a rear window
(5) Sitting on a console
(6) Lying back in a reclined seat position
(7) Bracing with feet or hands on a surface in front of seat
(8) Other abnormal posture (specify): _____
(9) Unknown

This report is authorized by P.L. 89-563, Title 1, Section 106, 108, and 112. While you are not required to respond, your cooperation is needed to make the results of this data collection effort comprehensive, accurate, and timely.

EJECTION/ENTRAPMENT

12. Ejection 0
    (0) No ejection
    (1) Complete ejection
    (2) Partial ejection
    (3) Ejection, unknown degree
    (9) Unknown

13. Ejection Area 0
    (0) No ejection
    (1) Windshield
    (2) Left front
    (3) Right front
    (4) Left rear
    (5) Right rear
    (6) Rear
    (7) Roof
    (8) Other area (e.g., back of pickup, etc.) (specify):_____
    (9) Unknown

14. Ejection Medium 0
    (0) No ejection
    (1) Door/hatch/tailgate
    (2) Nonfixed roof structure
    (3) Fixed glazing
    (4) Nonfixed glazing (specify): _____
    (5) Integral structure
    (8) Other medium (specify): _____
    (9) Unknown

15. Medium Status (Immediately Prior To Impact) 0
    (0) No ejection
    (1) Open
    (2) Closed
    (3) Integral structure
    (9) Unknown

16. Entrapment 0
    (NOTE: Entrapped means that part of the person was in the vehicle and mechanically restrained; jammed doors and immobilizing injuries by themselves are not sufficient to constitute entrapment.)
    (0) Not entrapped
    (1) Entrapped
    (9) Unknown

RESTRAINT SYSTEM EVALUATION

17. Manual (Active) Belt System Availability 3
    (0) None available
    (1) Belt removed/destroyed
    (2) Shoulder belt
    (3) Lap belt
    (4) Lap and shoulder belt
    (5) Belt available—type unknown

    Integral Belt Partially Destroyed
    (6) Shoulder belt (lap belt destroyed/removed)
    (7) Lap belt (shoulder belt destroyed/removed)

    (8) Other belt (specify): _____

    (9) Unknown

18. Manual (Active) Belt System Use 0 0
    (00) None used, not available, or belt removed/destroyed
    (01) Inoperative (specify): _____

    (02) Shoulder belt
    (03) Lap belt
    (04) Lap and shoulder belt
    (05) Belt used—type unknown
    (08) Other belt used (specify): _____

    (12) Shoulder belt used with child safety seat
    (13) Lap belt used with child safety seat
    (14) Lap and shoulder belt used with child safety seat
    (15) Belt used with child safety seat—type unknown
    (18) Other belt used with child safety seat (specify): _____
    (99) Unknown if belt used

19. Proper Use of Manual (Active) Belts 0
    (0) None used or not available
    (1) Belt used properly
    (2) Belt used properly with child safety seat

    Belt Used Improperly
    (3) Shoulder belt worn under arm
    (4) Shoulder belt worn behind back or seat
    (5) Belt worn around more than one person
    (6) Lap belt worn on abdomen
    (7) Lap belt or lap and shoulder belt used improperly with child safety seat (specify): _____

    (8) Other improper use of manual belt system (specify): _____

    (9) Unknown

20. Manual (Active) Belt Failure Modes During Accident 0
    (0) No manual belt used
    (1) No manual belt failure(s)
    (2) Torn webbing (stretched webbing not included)
    (3) Broken buckle or latchplate
    (4) Upper anchorage separated
    (5) Other anchorage separated (specify): _____

    (6) Broken retractor
    (7) Combination of above (specify): _____

    (8) Other manual belt failure (specify): _____

    (9) Unknown

21. Air Bag System Availability/Function 0
    (0) Not equipped/not available
    (1) Air bag

    Non-functional
    (2) Air bag disconnected (specify): _____

    (3) Air bag not reinstalled
    (9) Unknown

22. Air Bag System Deployment 0
    (0) Not equipped/not available
    (1) Air bag deployed during accident (as a result of impact)
    (2) Air bag deployed inadvertently just prior to accident
    (3) Air bag deployed, accident sequence undetermined
    (4) Nondeployed
    (5) Unknown if deployed
    (6) Air bag deployed as a result of a noncollision event during accident sequence (e.g., fire, explosion, electrical)
    (9) Unknown

23. Are There Indications of Air Bag System Failure? 0
    (0) Not equipped/not available
    (1) No
    (2) Yes (specify): _____

    (9) Unknown

Note: See Variables 44 through 48 (Page 5) for Information on Automatic Belts

24. Police Reported Restraint Use 9
    (0) None used
    (1) Police did not indicate restraint use
    (2) Shoulder belt
    (3) Lap belt
    (4) Lap and shoulder belt
    (5) Belt used, type not specified
    (6) Child safety seat
    (7) Other or automatic restraint (specify): _____

    (8) Restrained, type unknown
    (9) Police indicated "unknown"

HEAD RESTRAINT AND SEAT EVALUATION

25. Head Restraint Type/Damage by Occupant at This Occupant Position 3
    (0) No head restraints
    (1) Integral—no damage
    (2) Integral—damaged during accident
    (3) Adjustable—no damage
    (4) Adjustable—damaged during accident
    (5) Add-on—no damage
    (6) Add-on—damaged during accident
    (8) Other (specify): _____
    (9) Unknown

26. Seat Type (this Occupant Position) 02
    (00) Occupant not seated or no seat
    (01) Bucket
    (02) Bucket with folding back
    (03) Bench
    (04) Bench with separate back cushions
    (05) Bench with folding back(s)
    (06) Split bench with separate back cushions
    (07) Split bench with folding back(s)
    (08) Pedestal (i.e., column supported)
    (09) Other seat type (specify): _____
    (10) Box mounted seat (i.e., van type)
    (99) Unknown

27. Seat Performance (this Occupant Position) 1
    (0) Occupant not seated or no seat
    (1) No seat performance failure(s)
    (2) Seat adjusters failed
    (3) Seat back folding locks or "seat back" failed
    (4) Seat track/anchors failed
    (5) Deformed by impact of occupant
    (6) Deformed by passenger compartment intrusion (specify): _____
    (7) Combination of above (specify): _____
    (8) Other (specify): _____
    (9) Unknown

CHILD SAFETY SEAT

28. Child Safety Seat Make/Model 0 0 0
(000) No child safety seat
Applicable codes are found in your NASS CDS Data Collection, Coding and Editing
(950) Built-in child safety seat
(997) Other make/model (specify): _____
(998) Unknown make/model
(999) Unknown if child safety seat used

29. Type of Child Safety Seat 0
(0) No child safety seat
(1) Infant seat
(2) Toddler seat
(3) Convertible seat
(4) Booster seat
(7) Other type child safety seat (specify): _____
(8) Unknown child safety seat type
(9) Unknown if child safety seat used

30. Child Safety Seat Orientation 0 0
(00) No child safety seat

Designed for Rear Facing for This Age/Weight
(01) Rear facing
(02) Forward facing
(08) Other orientation (specify): _____
(09) Unknown orientation

Designed For Forward Facing for This Age/Weight
(11) Rear facing
(12) Forward facing
(18) Other orientation (specify): _____
(19) Unknown orientation

Unknown Design or Orientation For This Age/Weight, or Unknown Age/Weight
(21) Rear facing
(22) Forward facing
(28) Other orientation (specify): _____
(29) Unknown orientation

(99) Unknown if child safety seat used

31. Child Safety Seat Harness Usage 0 0

32. Child Safety Seat Shield Usage 0 0

33. Child Safety Seat Tether Usage 0 0

Note: Options below applicable to Variables OA31-OA33.
(00) No child safety seat

Not Designed With Harness/Shield/Tether
(01) After market harness/shield/tether added, not used
(02) After market harness/shield/tether used
(03) Child safety seat used, but no after market harness/shield/tether added
(09) Unknown if harness/shield/tether added or used

Designed With Harness/Shield/Tether
(11) Harness/shield/tether not used
(12) Harness/shield/tether used
(19) Unknown if harness/shield/tether used

Unknown If Designed With Harness/Shield/Tether
(21) Harness/shield/tether not used
(22) Harness/shield/tether used
(29) Unknown if harness/shield/tether used

(99) Unknown if child safety seat used

INJURY CONSEQUENCES

34. Injury Severity (Police Rating) 1

(0) O - No injury
(1) C - Possible injury
(2) B - Nonincapacitating injury
(3) A - Incapacitating injury
(4) K - Killed
(5) U - Injury, severity unknown
(6) Died prior to accident
(9) Unknown

35. Treatment - Mortality 4
(0) No treatment
(1) Fatal
(2) Fatal - ruled disease (specify):

_____

Nonfatal
(3) Hospitalization
(4) Transported and released
(5) Treatment at scene - nontransported
(6) Treatment later
(8) Treatment - other (specify):

_____

(9) Unknown

36. Type Of Medical Facility (for Initial Treatment) 1
(0) Not treated at a medical facility
(1) Trauma center
(2) Hospital
(3) Medical clinic
(4) Physician's office
(5) Treatment later at medical facility
(8) Other (specify):

_____

(9) Unknown

37. Hospital Stay 00
(00) Not Hospitalized
____Code the number of days (up through 60) that the occupant stayed in hospital.
(61) 61 days or more
(99) Unknown

38. Working Days Lost 03
____Code the number of days (up through 60) that the occupant lost from work due to the accident
(00) No working days lost
(61) 61 days or more
(62) Fatally injured
(97) Not working prior to accident
(99) Unknown

STOP - GO TO VARIABLE 44 ON PAGE 7

VARIABLES 39 THROUGH 43 ARE COMPLETED BY THE ZONE CENTER

39. Time to Death 00
____Code number of hours from time of accident to time of death up through 24 hours. If time of death is greater than 24 hours, code number of days. (Note: 1 day = 31, 2 days = 32, ... n days = 30 +n up through 30 days = 60)
(00) Not fatal
(96) Fatal - ruled disease
(99) Unknown

40. 1st Medically Reported Cause of Death 00

41. 2nd Medically Reported Cause of Death 00

42. 3rd Medically Reported Cause of Death 00
____Code the Occupant Injury from line number(s) for the medically reported injury(s) which reportedly contributed to this occupant's death
(00) Not fatal or no additional causes
(97) Other result (includes fatal ruled disease) (specify):

_____

(99) Unknown

43. Number of Recorded Injuries for This Occupant 03
____Code the actual number of injuries recorded for this occupant.
(00) No recorded injuries
(97) Injured, details unknown
(99) Unknown if injured

BEST AVAILABLE COPY

AUTOMATIC BELT SYSTEM

44. Automatic (Passive) Belt System Availability/ Function 1
(0) Not equipped/not available
(1) 2 point automatic belts
(2) 3 point automatic belts
(3) Automatic belts - type unknown

Non-functional
(4) Automatic belts destroyed or rendered inoperative
(9) Unknown

45. Automatic (Passive) Belt System Use 2
(0) Not equipped/not available/destroyed or rendered inoperative
(1) Automatic belt in use 1
(2) Automatic belt not in use (manually disconnected, motorized track inoperative) (specify): _____
(3) Automatic belt use unknown
(9) Unknown

MASS CODING CHANGE 1st Review: 1A 2nd Review: ____

46. Automatic (Passive) Belt System Type 2
(0) Not equipped/not available
(1) Non-motorized system
(2) Motorized system
(9) Unknown

47. Proper Use of Automatic (Passive Belt System 0
(0) Not equipped/not available/not used
(1) Automatic belt used properly 1
(2) Automatic belt used properly with child safety seat

Automatic Belt Used Improperly
(3) Automatic shoulder belt worn under arm
(4) Automatic shoulder belt worn behind back
(5) Automatic belt worn around more than one person
(6) Lap portion of automatic belt worn on abdomen
(7) Automatic lap and shoulder belt or automatic shoulder belt used improperly with child safety seat (specify): _____
(8) Other improper use of automatic belt system (specify): _____
(9) Unknown

MASS CODING CHANGE 1st Review: 1A 2nd Review: ____

48. Automatic (Passive) Belt Failure Modes During Accident 0
(0) Not equipped/not available/not in use 1
(1) No automatic belt failure(s)
(2) Torn webbing (stretched webbing not included)
(3) Broken buckle or latchplate
(4) Upper anchorage separated
(5) Other anchorage separated (specify): _____
(6) Broken retractor
(7) Combination of above (specify):
(8) Other automatic belt failure (specify): _____
(9) Unknown

MASS CODING CHANGE 1st Review: 1A 2nd Review: ____

49. Seat Orientation (this Occupant Position) 1
(0) Occupant not seated or no seat
(1) Forward facing seat
(2) Rear facing seat
(3) Side facing seat (inward)
(4) Side facing seat (outward)
(8) Other (specify): _____
(9) Unknown

STOP - VARIABLES 50 THROUGH 52 ARE COMPLETED BY THE ZONE CENTER

TRAUMA DATA

50. Glasgow Coma Scale (GCS) Score (at Medical Facility) 15
(00) Not injured
(01) Injured - not treated at medical facility
(02) No GCS Score at medical facility
(03-15) Code the actual value of the initial GCS Score recorded at medical facility.
(97) Injured, details unknown
(99) Unknown if injured

51. Was the Occupant Given Blood? 1
(1) No - blood not given
(2) Yes - blood given (specify units): _____
(9) Unknown if blood given

52. Arterial Blood Gases (ABG) – HCO_3 01
(00) Not injured
(01) Injured, ABGs not measured or reported
(02-50) Code the actual value of the HCO_3
(96) ABGs reported , HCO_3 unknown
(97) Injured, details unknown
(99) Unknown if injured

ARE ALL APPLICABLE MEDICAL RECORDS INCLUDED WITH INITIAL SUBMISSION? NO [✓] YES [ ]

UPDATE CANDIDATE? NO [ ] YES [✓]

U.S. Department of Transportation
National Highway Traffic Safety Administration

BEST AVAILABLE

Form Approved
O.M.B. No. 2127-0021

OCCUPANT INJURY FORM

NATIONAL ACCIDENT SAMPLING SYSTEM
CRASHWORTHINESS DATA SYSTEM

1. Primary Sampling Unit Number	05	3. Vehicle Number	02
2. Case Number - Stratum	023F	4. Occupant Number	01

INJURY DATA

Record below the actual injuries sustained by this occupant that were identified from the official and unofficial data sources. Remember not to double count an injury just because it was identified from two different sources. If greater than ten injuries have been documented, encode the balance on the Occupant Injury Supplement.

	Source of Injury Data	O.I.C.-A.I.S Body Region	Type of Anatomic Structure	Specific Anatomic Structure	Level of Injury	A.I.S. Severity	Aspect	Injury Source	Injury Source Confidence Level	Direct/ Indirect Injury	Occupant Area Intrusion Number
1st (catram)	5. 3	6. 6	7. 4	8. 02	9. 78	10. 1	11. 6	12. 92	13. 2	14. 3	15. 00
2nd (chest cont)	16. 3	17. 4	18. 9	19. 04	20. 02	21. 1	22. 1	23. 41	24. 2	25. 1	26. 00
3rd (cont shoulder)	27. 7	28. 7	29. 9	30. 04	31. 02	32. 1	33. 1	34. 40	35. 3	36. 1	37. 00
4th	38.	39.	40.	41.	42.	43.	44.	45.	46.	47.	48.
5th	49.	50.	51.	52.	53.	54.	55.	56.	57.	58.	59.
6th	60.	61.	62.	63.	64.	65.	66.	67.	68.	69.	70.
7th	71.	72.	73.	74.	75.	76.	77.	78.	79.	80.	81.
8th	82.	83.	84.	85.	86.	87.	88.	89.	90.	91.	92.
9th	93.	94.	95.	96.	97.	98.	99.	100.	101.	102.	103.
10th	104.	105.	106.	107.	108.	109.	110.	111.	112.	113.	114.

HS Form 433B (1/93)

This report is authorized by P.L. 89-563, Title 1, Section 106, 108, and 112. While you are not required to respond, your cooperation is needed to make the results of this data collection effort comprehensive, accurate, and timely.

OCCUPANT INJURY DATA

	Source of Injury Data	O.I.C.-A.I.S Body Region	Type of Anatomic Structure	Specific Anatomic Structure	Level of Injury	A.I.S. Severity	Aspect	Injury Source	Injury Source Confidence Level	Direct/ Indirect Injury	Occupant Area Intrusion Number
11th											
12th											
13th											
14th											
15th											
16th											
17th											
18th											
19th											
20th											
21st											
22nd											
23rd											
24th											
25th											

OFFICIAL INJURY DATA — SOFT TISSUE INJURIES

Indicate the Location, Specific Anatomic Structure, Detail (size, depth, fracture type, head injury clinical signs and neurological deficits), and Source of all injuries indicated by official sources (or from PAR or other unofficial sources if medical records and interviewee data are unavailable.)

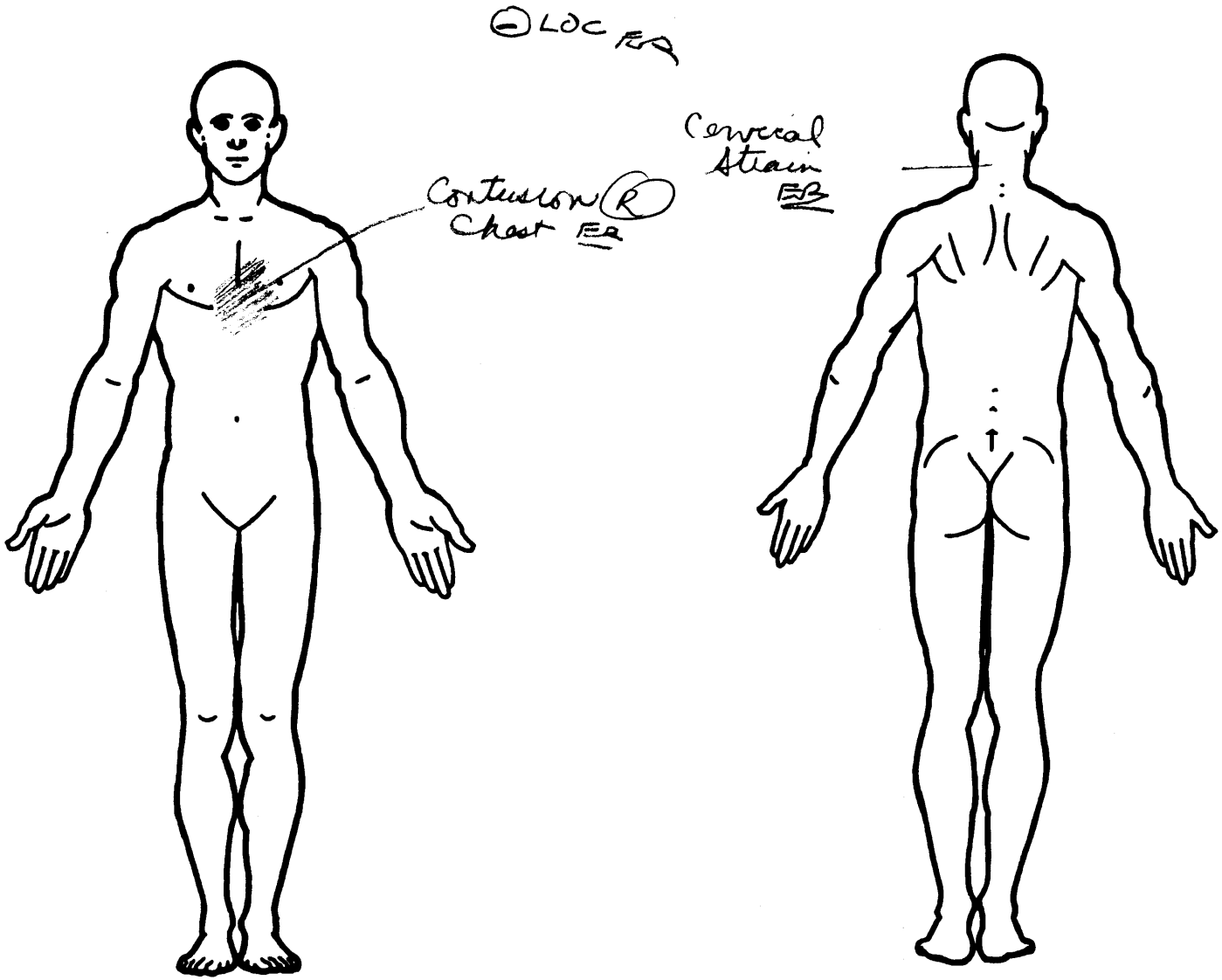

SOURCE OF INJURY DATA

OFFICIAL

(1) Autopsy records with or without hospital/medical records
(2) Hospital/medical records other than emergency room (e.g., discharge summary)
(3) Emergency room records only (including associated X-rays or other lab reports)
(4) Private physician, walk-in or emergency clinic

UNOFFICIAL

(5) Lay coroner report
(6) E.M.S. personnel
(7) Interviewee
(8) Other source (specify): _____
(9) Police

INJURY SOURCE

FRONT

(01) Windshield
(02) Mirror
(03) Sunvisor
(04) Steering wheel rim
(05) Steering wheel hub/spoke
(06) Steering wheel (combination of codes 04 and 05)
(07) Steering column, transmission selector lever, other attachment
(08) Add on equipment (e.g., CB, tape deck, air conditioner)
(09) Left instrument panel and below
(10) Center instrument panel and below
(11) Right instrument panel and below
(12) Glove compartment door
(13) Knee bolster
(14) Windshield including one or more of the following: front header, A (A1/A2)-pillar, instrument panel, mirror, or steering assembly (driver side only)
(15) Windshield including one or more of the following: front header, A (A1/A2)-pillar, instrument panel, or mirror (passenger side only)
(16) Driver side air bag compartment cover
(17) Passenger side air bag compartment cover
(18) Windshield reinforced by exterior object (specify): _____
(19) Other front object (specify): _____

LEFT SIDE

(20) Left side interior surface, excluding hardware or armrests
(21) Left side hardware or armrest
(22) Left A (A1/A2)-pillar
(23) Left B-pillar
(24) Other left pillar (specify): _____
(25) Left side window glass or frame
(26) Left side window glass including one or more of the following: frame, window sill, A (A1/A2)-pillar, B-pillar, or roof side rail.
(27) Other left side object (specify): _____
(28) Left side window sill

RIGHT SIDE

(30) Right side interior surface, excluding hardware or armrests
(31) Right side hardware or armrest
(32) Right A (A1/A2)-pillar
(33) Right B-pillar
(34) Other right pillar (specify): _____
(35) Right side window glass or frame
(36) Right side window glass including one or more of the following: frame, window sill, A (A1/A2)-pillar, B-pillar, or roof side rail.
(37) Other right side object (specify): _____
(38) Right side window sill

INTERIOR

(40) Seat, back support
(41) Belt restraint webbing/buckle
(42) Belt restraint B-pillar or door frame attachment point
(43) Other restraint system component (specify): _____
(44) Head restraint system
(45) Air bag (use codes "16" and "17" for injuries sustained from air bag compartment covers)
(46) Other occupants (specify): _____
(47) Interior loose objects
(48) Child safety seat (specify): _____
(49) Other interior object (specify): _____

ROOF

(50) Front header
(51) Rear header
(52) Roof left side rail
(53) Roof right side rail
(54) Roof or convertible top

FLOOR

(56) Floor (including toe pan)
(57) Floor or console mounted transmission lever, including console
(58) Parking brake handle
(59) Foot controls including parking brake

REAR

(60) Backlight (rear window)
(61) Backlight storage rack, door, etc.
(62) Other rear object (specify): _____

EXTERIOR of OCCUPANT'S VEHICLE

(65) Hood
(66) Outside hardware (e.g., outside mirror, antenna)
(67) Other exterior surface or tires (specify): _____
(68) Unknown exterior objects

EXTERIOR OF OTHER MOTOR VEHICLE

(70) Front bumper
(71) Hood edge
(72) Other front of vehicle (specify): _____
(73) Hood
(74) Hood ornament
(75) Windshield, roof rail, A-pillar
(76) Side surface
(77) Side mirrors
(78) Other side protrusions (specify) _____
(79) Rear surface
(80) Undercarriage
(81) Tires and wheels
(82) Other exterior of other motor vehicle (specify): _____
(83) Unknown exterior of other motor vehicle

OTHER VEHICLE OR OBJECT IN THE ENVIRONMENT

(84) Ground
(85) Other vehicle or object (specify) _____
(86) Unknown vehicle or object

NONCONTACT INJURY

(90) Fire in vehicle
(91) Flying glass
(92) Other noncontact injury source (specify): _____
(93) Air bag exhaust gases
(97) Injured, unknown source

INJURY SOURCE CONFIDENCE LEVEL

(1) Certain
(2) Probable
(3) Possible
(9) Unknown

DIRECT/INDIRECT INJURY

(1) Direct contact injury
(2) Indirect contact injury
(3) Noncontact injury
(7) Injured, unknown source

OCCUPANT INJURY CLASSIFICATION

Body Region

(1) Head
(2) Face
(3) Neck
(4) Thorax
(5) Abdomen
(6) Spine
(7) Upper Extremity
(8) Lower Extremity
(9) Unspecified

Type of Anatomic Structure

(1) Whole Area
(2) Vessels
(3) Nerves
(4) Organs (includes muscles/ligaments)
(5) Skeletal (includes joints)
(6) Head - LOC
(9) Skin

Specific Anatomic Structure

Whole Area

(02) Skin - Abrasion
(04) Skin - Contusion
(06) Skin - Laceration
(08) Skin - Avulsion
(10) Amputation
(20) Burn
(30) Crush
(40) Degloving
(50) Injury - NFS
(90) Trauma, other than mechanical

Head - LOC

(02) Length of LOC
(04, 06, 08) Level of Consciousness
(10) Concussion

Spine

(02) Cervical
(04) Thoracic
(06) Lumbar

Vessels, Nerves, Organs, Bones, Joints are assigned consecutive two digit numbers beginning with 02

Level of Injury

Specific injuries are assigned consecutive two-digit numbers beginning with 02.

To the extent possible, within the organizational framework of the AIS, 00 is assigned to an injury NFS as to severity or where only one injury is given in the dictionary for that anatomic structure. 99 is assigned to any injury NFS as to lesion or severity.

Abbreviated Injury Scale

(1) Minor injury
(2) Moderate injury
(3) Serious injury
(4) Severe injury
(5) Critical injury
(6) Maximum (untreatable)
(7) Injured, unknown severity

Aspect

(1) Right
(2) Left
(3) Bilateral
(4) Central
(5) Anterior
(6) Posterior
(7) Superior
(8) Inferior
(9) Unknown
(0) Whole region

OFFICIAL INJURY DATA — SKELETAL INJURIES

Restrained?

___ No

✓ Yes

Blood Alcohol Level (mg/dl)

BAL = /

not given

Glasgow Coma Scale Score

CN II-XII intact

GCSS = 15

Units of Blood Given

Units = Ø

Arterial Blood Gases

pH = __.__

PO_2 = ___

PCO_2 ___

HCO_3 ___

not tested

Indicate the Location, Specific Anatomic Structure, Detail (size, depth, fracture type, head injury clinical signs and neurological deficits), and Source of all injuries indicated by official sources (or from PAR or other unofficial sources if medical records and interviewee data are unavailable.)

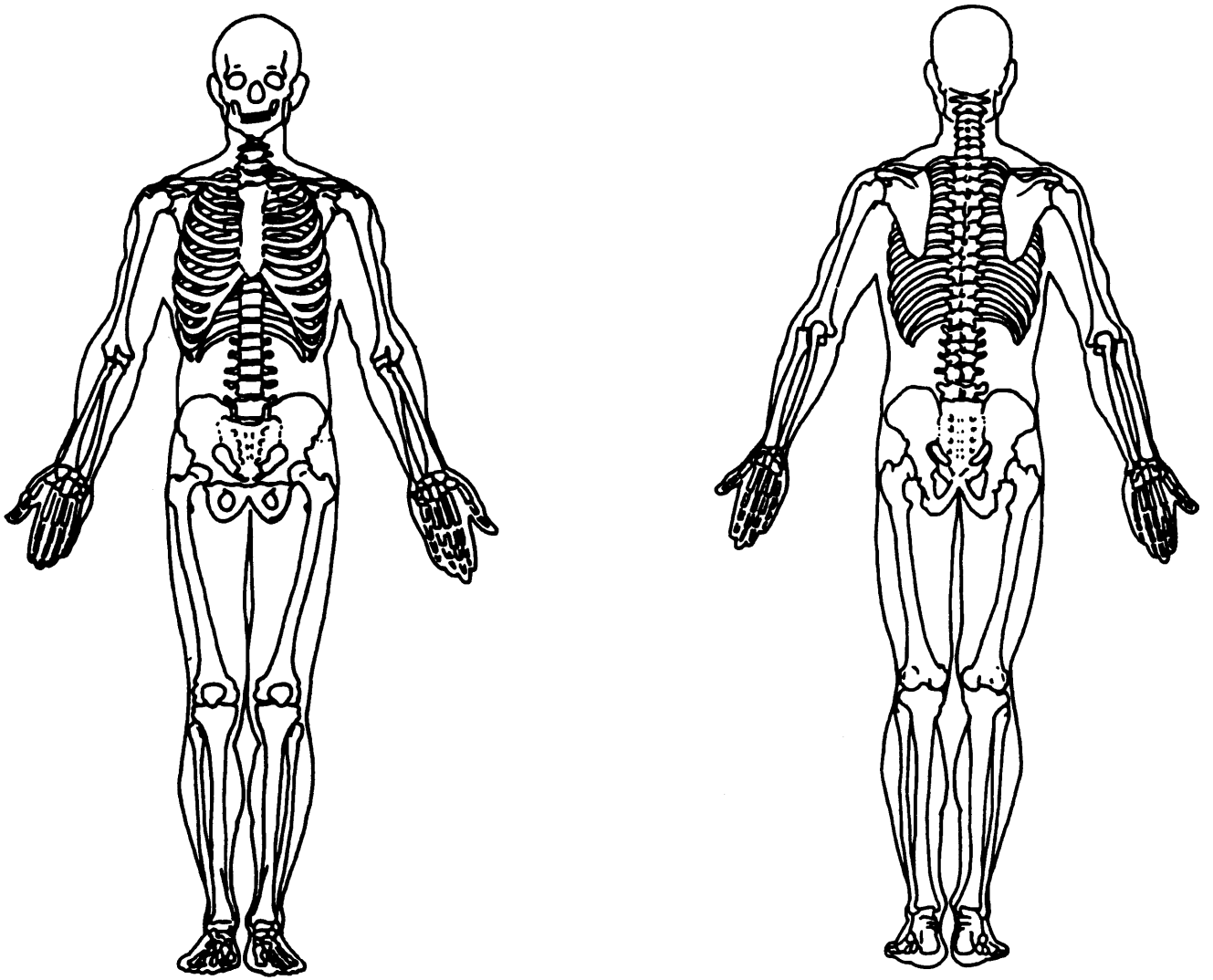

BEST AVAILABLE

OFFICIAL INJURY DATA —INTERNAL INJURIES

Indicate the Location, Specific Anatomic Structure, Detail (size, depth, fracture type, head injury clinical signs and neurological deficits), and Source of all injuries indicated by official sources (or from PAR or other unofficial sources if medical records and interviewee data are unavailable.)

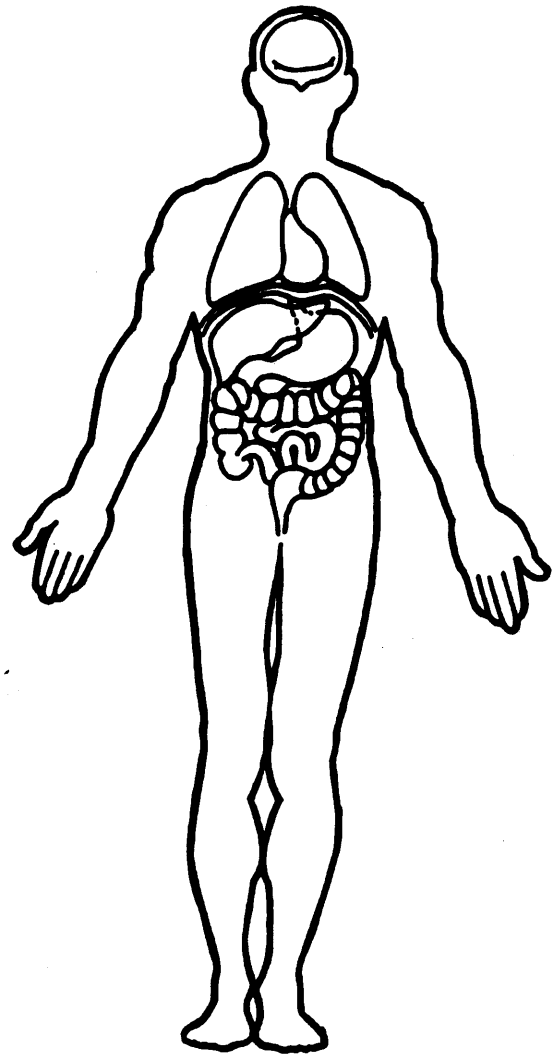

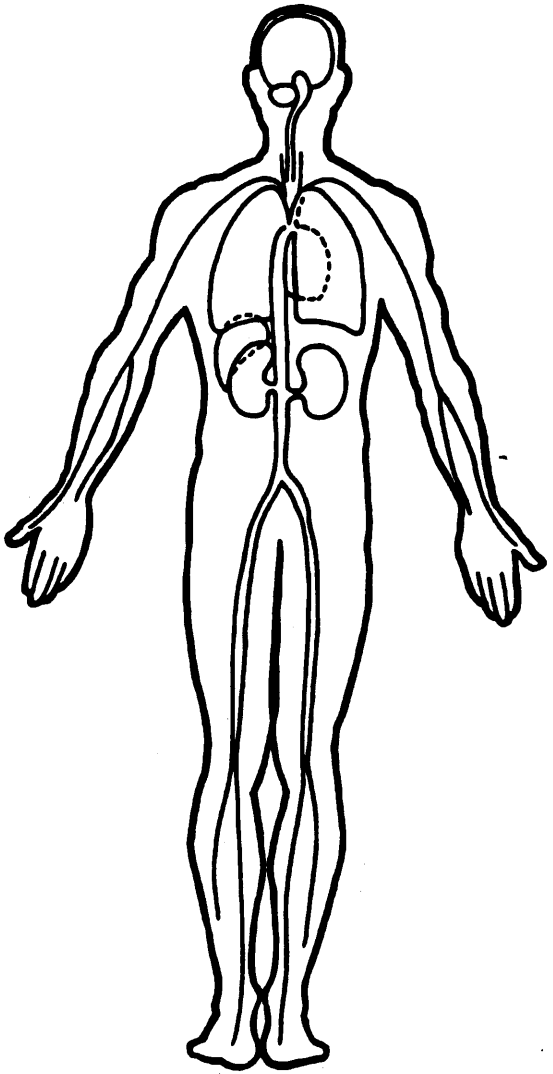

U.S. Department of Transportation

National Highway Traffic Safety Administration

UPDATE FORM

NATIONAL ACCIDENT SAMPLING SYSTEM
CRASHWORTHINESS DATA SYSTEM

1. Primary Sampling Unit Number 05
2. Case Number — Stratum 0236
3. Vehicle Number 08
4. Occupant Number 01

1993 ER RAD

Driver or Occupant Name: _____

Address: _____

_____

Other Information: _____

_____

(Sanitize this section prior to Update submission.)

STATUS OF LOG INJURY INFORMATION

	INITIAL SUBMISSION	UPDATED INFORMATION
OAL08. Date Official Medical Data Requested		93
OAL09. Date Official Medical Data Obtained		93
OAL16. Injury Treatment Status	5	5
OAL17. Injury Information		
Official		
a. Autopsy (invasive examination)	B	
b. Post-ER medical record which includes information about death based on non-invasive examination	B	
c. Admission record/summary or admission/discharge face sheet	B	
d. Discharge summary	B	
e. Operative report	B	
f. Radiographic record(s) post ER visit	B	
g. History and physical examination and/or consultation records	B	
h. Emergency room records	B 08	11
i. Radiographic record(s) associated with ER visit	B	11
j. Private physician	B	
Unofficial		
k. Lay coroner	B	
l. EMS record	B	
m. Interviewee	B	
n. Other source (specify): _____	B	B
o. Police report	B	B

OAL18. Medical Facility Code 01 01

HS Form 433C (Rev. 1/93)

received 93

BEST AVAILABLE

OFFICE MEMO

HOSPITAL

TO Mass FROM DATE 93

In regard to your request for we wish to advise that we do not have any record of this patient on our Computer or in the ER file for 93.

Very truly yours

(Miss) Custodian of Records

POS
023E V-01
D-01

05023E00000011 936.02000000000021154000002 93 93 93 93015367000
018865000289898
05023E00010012 936.02100000000000103F0201R
05023E00020012 936.02100000000000201T3100N
05023E01000021 6.02 00000000093120170 41FALP52UXPA 099909607202861020 21
40000000000090180599 9 999 9999999011
05023E01000022 6.02 0000000000000000000000000000 10000000036611
05023E01000031 6.02 00000000010209FZES01 158001002000001002002+
037 002690001
05023E01000041 6.02 0000000000011110000000000008000000000000000000000000000
05023E01000042 6.02 000000000
2 0000006000
05023E01010051 6.02 00000000023216804811100000040000141030610000000000000041
000100000000030000010210 1
05023E01010161 6.02 0000000007290402170411 00
05023E01010261 6.02 0000000007890402130911 00
05023E01010361 6.02 0000000007640278160412 00
05023E01020051 6.02 00000000002109101622300000041421000100312122120312039 00
009700000000000000100100
05023E02000021 6.02 00000000091550320 3KMHVD12J7MU 199909605601871010 11
000000004001800905999 9 999 9999999011
05023E02000022 6.02 0000000000000000000000000000 90313182011700
05023E02000031 6.02 00000000001010 1RYEW02023100TDDO02172008013014017013003-
005 012380001
05023E02000041 6.02 0000000000613001000002060608800000000102020001020200 0
05023E02000042 6.02 000000000131023
1 0000021080
05023E02010051 6.02 00000000038214004411100000030000000093021000000000000141
000300000000031121111510 1
05023E02010161 6.02 0000000003640278169223 00
05023E02010261 6.02 0000000003490402114121 00
05023E02010361 6.02 0000000007790402114031 00
05023E99999999900000000000000000000000000000000000010000000000000000000000000000030000
00001000000000

GENERAL VEHICLE Vehicle: 1

11

INTRA ERRORS

OGG2251 2 If ACCIDENT TYPE GV15 equals
20, 24, 28, 44, 45, 51, 65, 69, 71, GG2252 73, 77, 79, 81, 83 or 86-89,
then PRE-EVENT MOVEMENT GV64 should GG2253 equal 01.

0

OCCUPANT ASSESSMENT Vehicle: 1 Occupant: 1

11

INTRA ERRORS

OHH1281 2 ******** TH
IS VEHICLE IS INICATED AS HAVING AN AIRBAG. ***** HH1282 ****** CHEC
K YOUR DATA AND IF CORRECT, NOTIFY YOUR ZONE ******* HH1283 AIR BAG AVA
ILABILITY/FUNCTION OA21 equals 1-3.

0

OCCUPANT ASSESSMENT Vehicle: 1 Occupant: 2

11

INTRA ERRORS

OHH0771 2 If SAFETY S
EAT MAKE OA28 equals 101-998, then REPORTED RESTRAINT HH0772 USE OA24 sh
ould equal 6.

0

OCCUPANT ASSESSMENT Vehicle: 2 Occupant: 1

11

INTRA ERRORS

OHH1091 2 If TREATMEN
T OA35 equals 0, 4 or 5, then WORKING DAYS LOST OA38 HH1092 should equa
l 00, 01, 97 or 99.

0

OCCUPANT INJURY Vehicle: 2 Occupant: 1

11

INTRA ERRORS

OTT0541 2 ****** THIS CA
SE SHOWS A RESTRAINT AS THE INJURY SOURCE ****** TT0542 ******
FOR AN AIS-2 (OR GREATER) INJURY. ****** TT0543 ****** CHECK FO
R ACCURATE AND COMPLETED DOCUMENTS & DATA ****** TT0544 INJURY SOURCE O
I12(n) equals 41, 42, 43 or 45 and A.I.S. TT0545 SEVERITY OI10(n
) is greater than 1.

0

PSU05 ERROR SUMMARY SCREEN 93
CASE 023E
CURRENT VERSION: 6.02

FORM NAME	NUMBER OF DOLLAR SIGNS	NUMBER OF LEVEL 1 ERRORS	NUMBER OF LEVEL 2 ERRORS	VERSION NUMBER CONSISTENT
Accident	0	0	0	N
General Vehicle	0	0	1	N
Vehicle Exterior	0	0	0	N
Vehicle Interior	0	0	0	Y
Occupant Assesment	0	0	3	N
Occupant Interior	0	0	1	N
Total Inter Errors		0	0	
Total Case Errors	0	0	5	

U.S. Department of Transportation
National Highway Traffic Safety Administration

CRASHPC PROGRAM SUMMARY

(All Measurements In Metric)

NATIONAL ACCIDENT SAMPLING SYSTEM
CRASHWORTHINESS DATA SYSTEM

Identifying Title

05	023 E	01	93
Primary Sampling Unit	Case No.-Stratum	Accident Event Sequence No.	Date (Month, day, year) of Run

CRASHPC Vehicle Identification

	Year	Make	Model	NASS Veh. No.
Vehicle 1	1993	Ford	Taurus.	#1
Vehicle 2	1991	Hyundai	Excel	#2.

GENERAL INFORMATION

VEHICLE 1		VEHICLE 2	
Size	3	Size	1
Weight	1399 + 64 + 0 = 1463 kg (Curb + Occupant(s) + Cargo)	Weight	999 + 44 + 0 = 1043 kg (Curb + Occupant(s) + Cargo)
CDC	~~09~~ 10 F2EW1	CDC	01 RYEW2
PDOF (-180 to +180)	±0080°	PDOF (-180 to +180)	±040°
Stiffness	9	Stiffness	1

SCENE INFORMATION

Rest and Impact Positions [ ] No, *Go To Damage Information* [ ] Yes

VEHICLE 1			VEHICLE 2		
Rest Position	X	___ m	Rest Position	X	___ m
	Y	___ m		Y	___ m
	PSI	___ °		PSI	___ °
Impact Position	X	___ m	Impact Position	X	___ m
	Y	___ m		Y	___ m
	PSI	___ °		PSI	___ °
Slip Angle(-180 to +180)		___ °	Slip Angle (-180 to +180)		___ °

VEHICLE MOTION

Sustained Contact [ ] No [ ] Yes

VEHICLE 1			VEHICLE 2		
Skidding (Rotation)		[ ] No [ ] Yes	Skidding (Rotation)		[ ] No [ ] Yes
Skidding Stop Before Rest		[ ] No [ ] Yes	Skidding Stop Before Rest		[ ] No [ ] Yes
End of Rotation Position	X	___ m	End of Rotation Position	X	___ m
	Y	___ m		Y	___ m
	PSI	___ °		PSI	___ °
Curved Path		[ ] No [ ] Yes	Curved Path		[ ] No [ ] Yes
Point on Path	X	___ m Y ___ m	Point on Path	X	___ m Y ___ m
Rotation Direction		[ ] None [ ] CW [ ] CCW	Rotation Direction		[ ] None [ ] CW [ ] CCW
Rotation >360°		[ ] No [ ] Yes	Rotation >360°		[ ] No [ ] Yes

National Accident Sampling System-Crashworthiness Data System: CRASHPC Program Summary

FRICTION INFORMATION

Coefficient of Friction . ___ ___ ___

Rolling Resistance Option ___

Vehicle 1 Rolling Resistance

LF ___ . ___ ___ RF ___ . ___ ___

LR ___ . ___ ___ RR ___ . ___ ___

Vehicle 2 Rolling Resistance

LF ___ . ___ ___ RF ___ . ___ ___

LR ___ . ___ ___ RR ___ . ___ ___

TRAJECTORY INFORMATION

Trajectory Data [ ] No [ ] Yes

If No, Go To Damage Information

Vehicle 1 Steer Angles

LF ___ ___ ___ ° RF ___ ___ ___ °

LR ___ ___ ___ ° RR ___ ___ ___ °

Vehicle 2 Steer Angles

LF ___ ___ ___ ° RF ___ ___ ___ °

LR ___ ___ ___ ° RR ___ ___ ___ °

Terrain Boundary [ ] No [ ] Yes

First Point

X ___ ___ ___ . ___ m Y ___ ___ ___ . ___ m

Second Point

X ___ ___ ___ . ___ m Y ___ ___ ___ . ___ m

Secondary Coefficient of Friction . ___ ___ ___

DAMAGE INFORMATION

	VEHICLE 1		VEHICLE 2	
Damage Length	L	158 cm	L	172 cm
Crush Depths	C_1	001 cm	C_1	008 cm
	C_2	002 cm	C_2	013 cm
	C_3	000 cm	C_3	014 cm
	C_4	001 cm	C_4	017 cm
	C_5	002 cm	C_5	013 cm
	C_6	002 cm	C_6	003 cm
Damage Offset	D	± 037 cm	D	± 005 cm

IF THIS COMMON IMPACT WAS WITH A MOTOR VEHICLE *NOT IN TRANSPORT*, FILL IN THE INFORMATION BELOW.

Model Year: _____

Make: _____

Model: _____

VIN: _____

The Weight, CDC, Scene Data and Damage Information for this vehicle should be recorded above.

Complete and ATTACH the appropriate vehicle damage sketch and dimensions to the Form.

SUMMARY OF CRASHPC RESULTS USING DAMAGE

CRASH3 RECONSTRUCTION

	SPEED CHANGE (DAMAGE)
VEHICLE #1	
TOTAL	12 KPH (8 MPH)
LONGITUDINAL	-4 KPH (-3 MPH)
LATITUDINAL	12 KPH (7 MPH)
PDOF ANGLE	-70 DEGREES
ENERGY DISSIPATED =	28760 JOULES (21209 FT-LB)
VEHICLE #2	
TOTAL	17 KPH (11 MPH)
LONGITUDINAL	-13 KPH (-8 MPH)
LATITUDINAL	-11 KPH (-7 MPH)
PDOF ANGLE	40 DEGREES
ENERGY DISSIPATED =	15629 JOULES (11526 FT-LB)

DAMAGE DATA

	VEHICLE #1	VEHICLE #2
SIZE CATEGORY	3	1
STIFFNESS CATEGORY	9	1
VEHICLE WEIGHT	1463 KGS (3225 LBS)	1043 KGS (2299 LBS)
CDC	10FZEW1	01RYEW2
PDOF ANGLE	-70 DEGREES	40 DEGREES
CRUSH LENGTH	158 CM. (62 IN.)	172 CM. (68 IN.)
C1	1 CM. (0 IN.)	8 CM. (3 IN.)
C2	2 CM. (1 IN.)	13 CM. (5 IN.)
C3	0 CM. (0 IN.)	14 CM. (6 IN.)
C4	1 CM. (0 IN.)	17 CM. (7 IN.)
C5	2 CM. (1 IN.)	13 CM. (5 IN.)
C6	2 CM. (1 IN.)	13 CM. (5 IN.)
D	37 CM. (15 IN.)	-5 CM. (-2 IN.)
D'	45 CM. (18 IN.)	-1 CM. (-1 IN.)

(* INDICATES DEFAULT VALUE)

DIMENSIONS AND INERTIAL PROPERTIES

	VEHICLE #1	VEHICLE #2
CG TO FRONT AXLE	130 CM. (51 IN.)	115 CM. (45 IN.)
CG TO REAR AXLE	141 CM. (56 IN.)	122 CM. (48 IN.)
TRACK	150 CM. (59 IN.)	130 CM. (51 IN.)
CG TO FRONT OF VEH	228 CM. (90 IN.)	193 CM. (76 IN.)
CG TO REAR OF VEH	-270 CM. (-106 IN.)	-213 CM. (-84 IN.)
CG TO SIDE OF VEH	92 CM. (36 IN.)	77 CM. (30 IN.)
MOMENT OF INERTIA	12644 KGS (27876 LBS)	5440 KGS (11993 LBS)
VEHICLE MASS	4 KGS (8 LBS)	3 KGS (6 LBS)

Printing Picture: CRASH

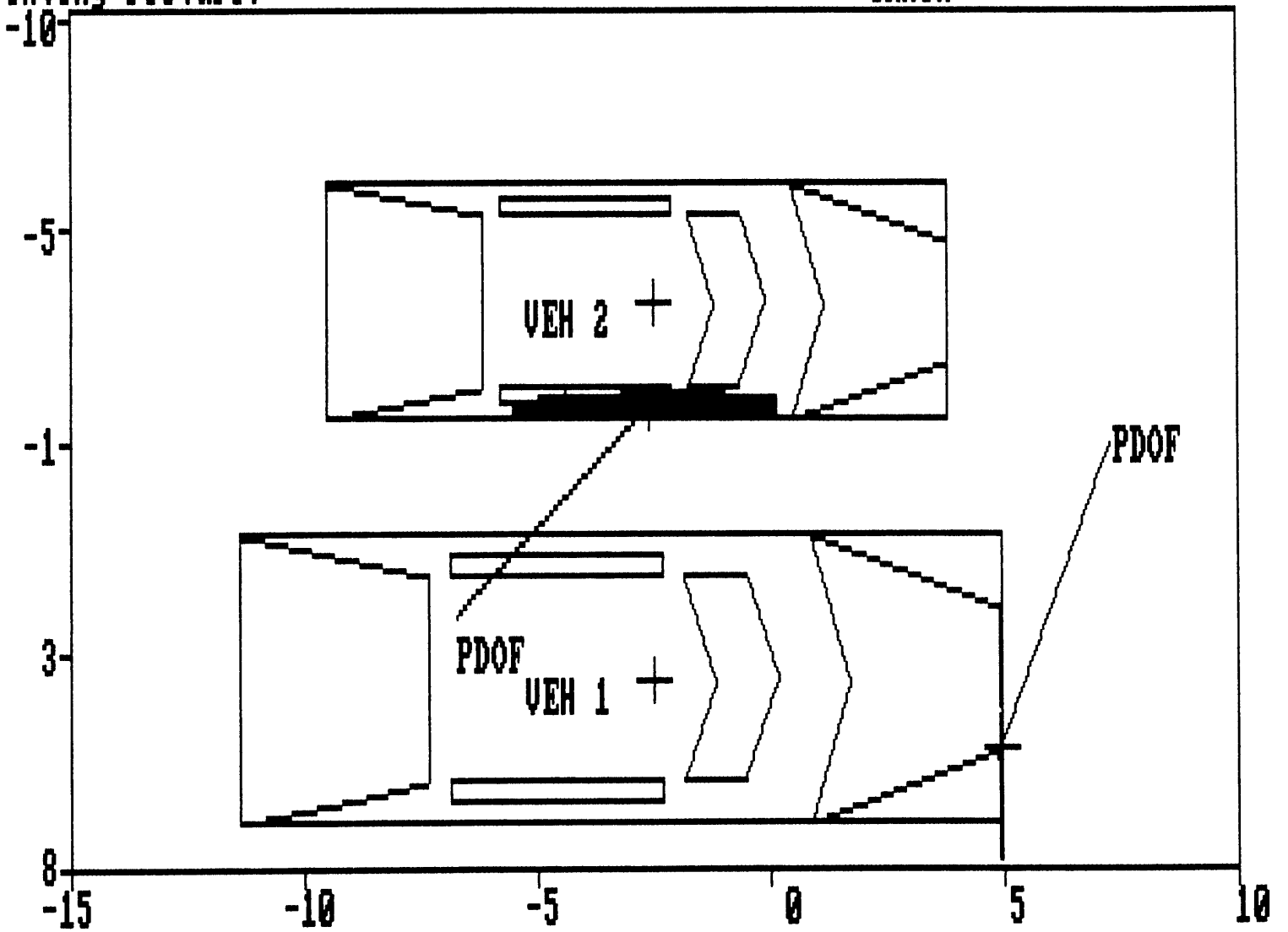

DAMAGE DESCRIPTION

U.S. Department of Transportation

National Highway Traffic Safety Administration

SLIDE INDEX

NATIONAL ACCIDENT SAMPLING SYSTEM
CRASHWORTHINESS DATA SYSTEM

Primary Sampling Unit Number 0 5

Case Number—Stratum 0 2 3 E

Slide No.	Vehicle No.	Direction of Picture	Description of Slide Subject Matter
1-4	1	East	Approach of V1
5	1	EAst	V1 impacts V2
6	1	WEst	Lookback from original path of travel
7-11	2	South	Approach of v2 and V2 is impact by V1 then rollsover
12	2	NOrth	V2 then travels forward to final rest
13-15	1		Frontal damage to v1
16-19	1		Left side of v1
20	1		Back of V1
21-23	1		right side of V1
24	1		View of contour gauge
25-34	1		Interior of V1
35-37	1		child safety seat in V1
38	1		View of right EAD
39-40	2		Front of V2
41-46	2		Left side of v2
47	2		Back of V2
48-55	2		Right side damage to v2 including rollover damage
56	2		View of contour gauge
57-70	2		Interior of V2

HS Form 434B (1/93)

Slide No.	Vehicle No.	Direction of Picture	Description of Slide Subject Matter

PSU 05-023E (1993) #1

PSU 05-023E (1993) #2

PSU 05-023E (1993) #3

PSU 05-023E (1993) # 4
Best Available

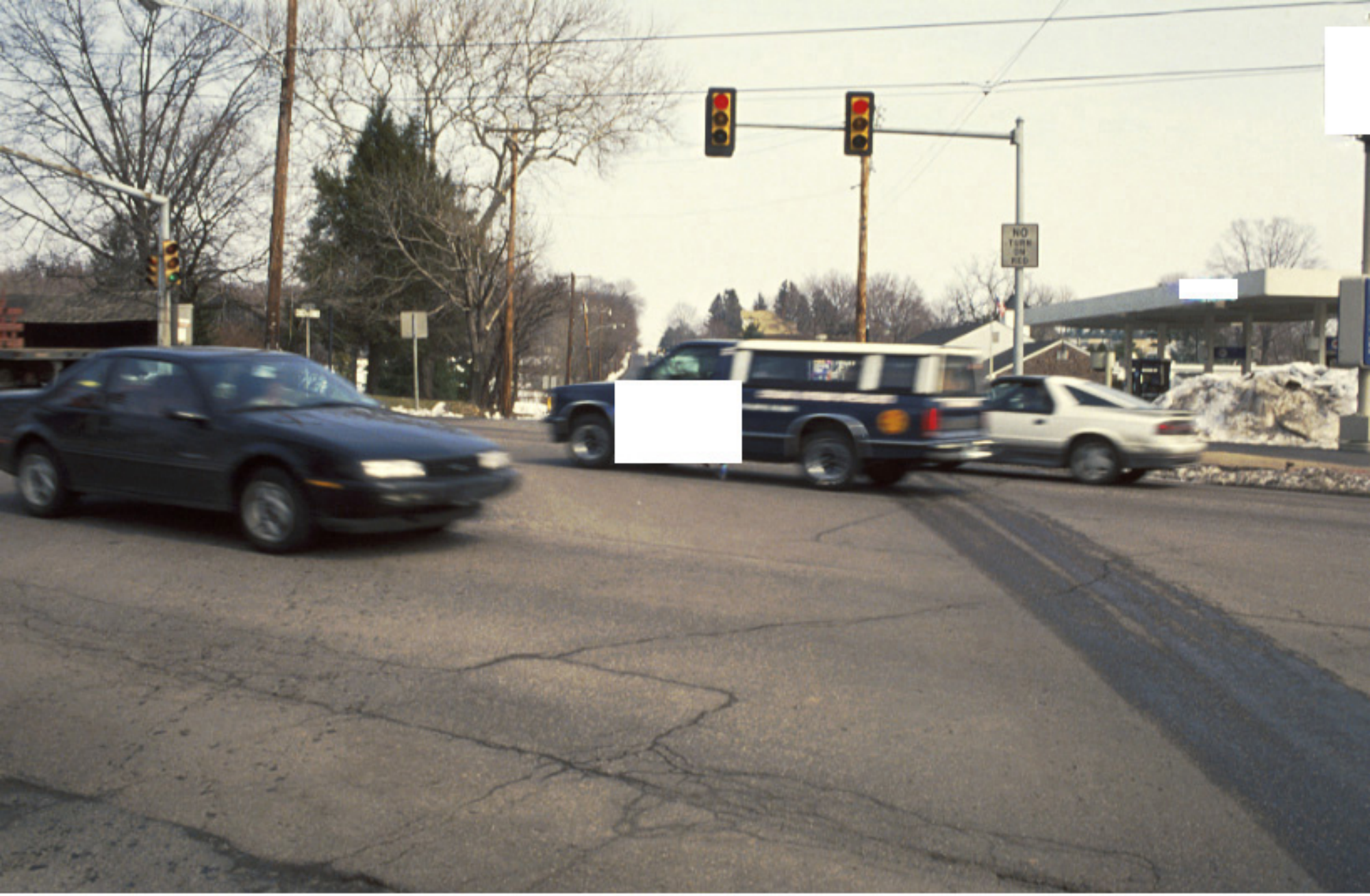

PSU 05-023E (1993) # 5
Best Available

PSU 05-023E (1993) #6

PSU 05-023E (1993) #7

PSU 05-023E (1993) #8

PSU 05-023E (1993) #9

PSU 05-023E (1993) #10

PSU 05-023E (1993) #11

PSU 05-023E (1993) #12

PSU 05-023E (1993) #13
Best Available

PSU 05-023E (1993) #14
Best Available

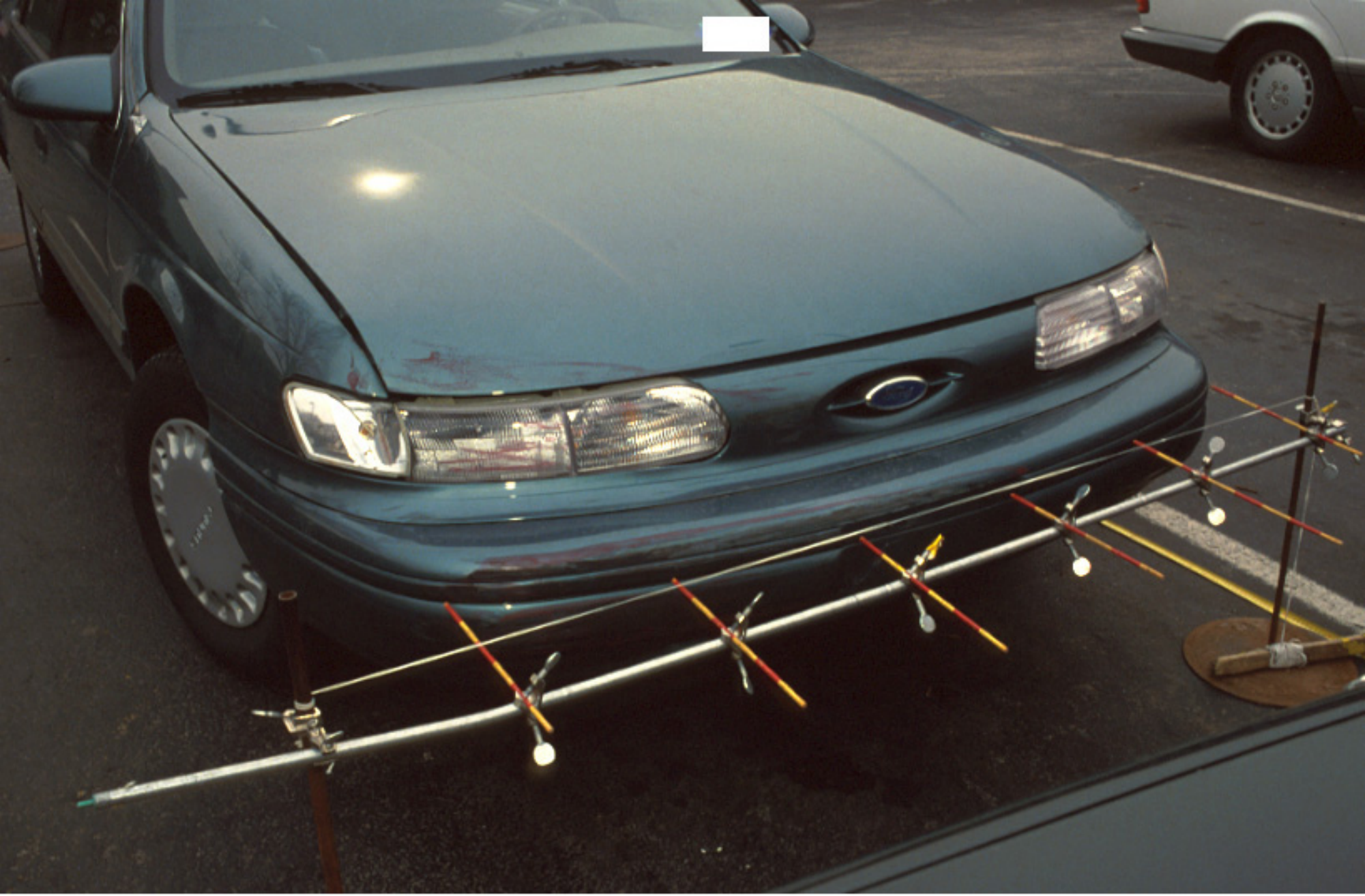

PSU 05-023E (1993) #15
Best Available

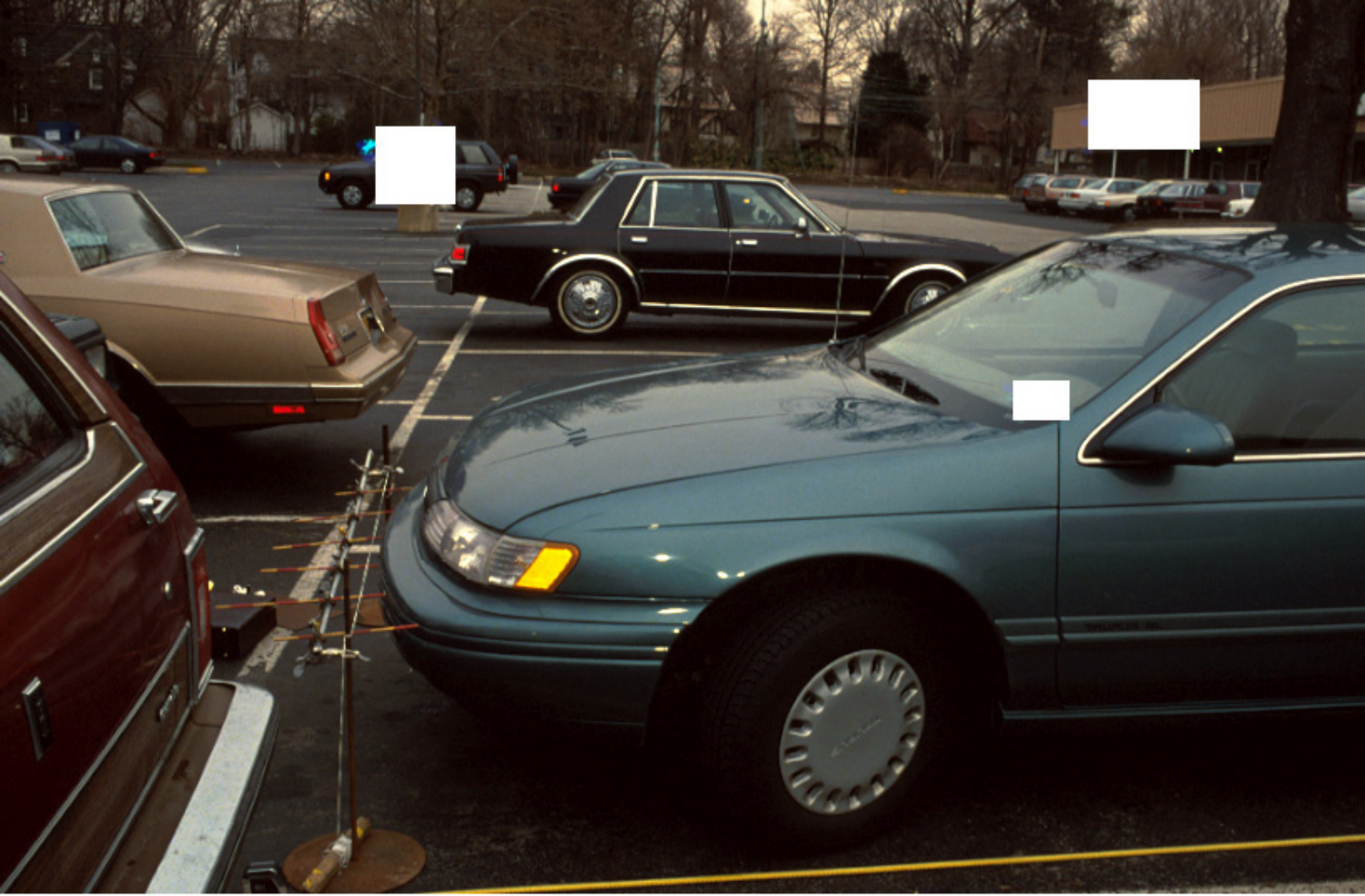

PSU 05-023E (1993) #16
Best Available

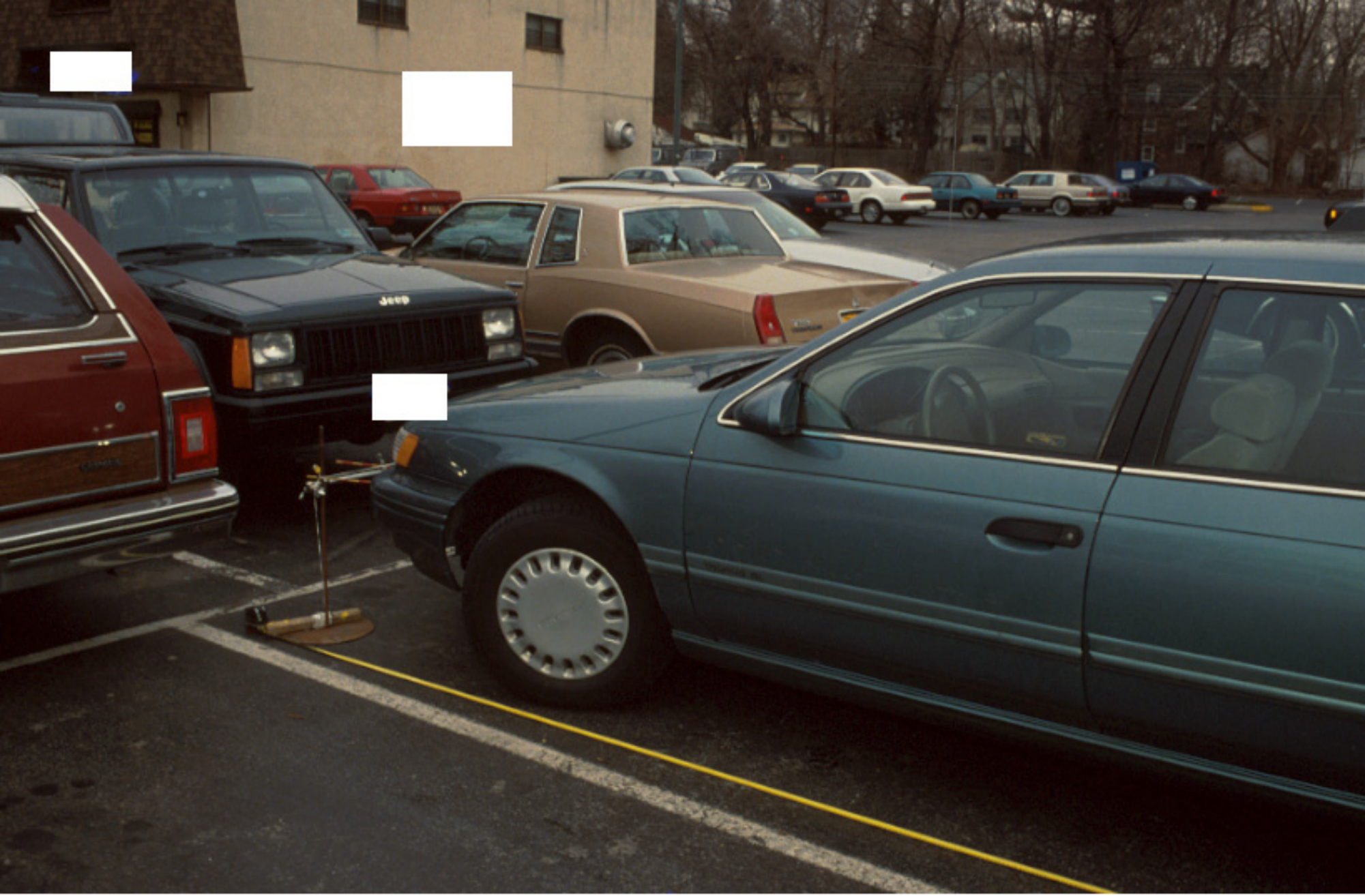

PSU 05-023E (1993) #17
Best Available

PSU 05-023E (1993) #18
Best Available

PSU 05-023E (1993) #19
Best Available

PSU 05-023E (1993) #20
Best Available

PSU 05-023E (1993) #21

PSU 05-023E (1993) #22

PSU 05-023E (1993) #23

PSU 05-023E (1993) #24

PSU 05-023E (1993) #25

PSU 05-023E (1993) #26

PSU 05-023E (1993) #27

PSU 05-023E (1993) #28

PSU 05-023E (1993) #29

PSU 05-023E (1993) #30

PSU 05-023E (1993) #31

PSU 05-023E (1993) #32

PSU 05-023E (1993) #33

PSU 05-023E (1993) #34

PSU 05-023E (1993) #35

PSU 05-023E (1993) #36

PSU 05-023E (1993) #37

PSU 05-023E (1993) #38

PSU 05-023E (1993) #39

PSU 05-023E (1993) #40

PSU 05-023E (1993) #41

PSU 05-023E (1993) #42

PSU 05-023E (1993) #43

PSU 05-023E (1993) #44

PSU 05-023E (1993) #45

PSU 05-023E (1993) #46

PSU 05-023E (1993) #47

PSU 05-023E (1993) #48

PSU 05-023E (1993) #49

PSU 05-023E (1993) #50

PSU 05-023E (1993) #51

PSU 05-023E (1993) #52

PSU 05-023E (1993) #53

PSU 05-023E (1993) #54

PSU 05-023E (1993) #55

PSU 05-023E (1993) #56

PSU 05-023E (1993) #57

PSU 05-023E (1993) #58

PSU 05-023E (1993) #59

PSU 05-023E (1993) #60

PSU 05-023E (1993) #61

PSU 05-023E (1993) #62

PSU 05-023E (1993) #63

PSU 05-023E (1993) #64

PSU 05-023E (1993) #65

PSU 05-023E (1993) #66

PSU 05-023E (1993) #67

PSU 05-023E (1993) #68

PSU 05-023E (1993) #69

PSU 05-023E (1993) #70