400 Seventh Street, S.W.
Washington, D.C. 20590

U.S. Department
of Transportation

**National Highway
Traffic Safety
Administration**

Dear Crash Data Researchers/Users:

Thank you for choosing crash data from the National Highway Traffic Safety Administration (NHTSA) for your research or other use. The information contained in this motor vehicle crash report is collected, maintained and distributed in accordance with Public Law 89-564. In accordance with this Public Law, NHTSA is required not to release any case information until completion of quality control procedures. These procedures include a review of the case material to extract all names, licenses and registration numbers, non-coded interview material, non-research related researcher comments in the margins, non-factual data, and the production number portion of the vehicle identification number (VIN).

If you requested NHTSA to query its database files in order to identify a specific crash, then that query was made using non-personal descriptors you provided for use in our search. This motor vehicle crash may have been identified from a data search and matches the general, non-personal descriptors you provided, but we cannot confirm that this is the specific crash report you requested.

If you have any questions with regard to the above procedures, please contact the Field Operations Branch, Crash Investigation Division, National Center for Statistics and Analysis at 202-366-4820. Again, please be advised that we cannot confirm that this is the case that you have specifically requested nor can we certify the information to be correct.

*** *** ***

Get it together!
SAFETY BELTS SAVE LIVES

AUTO SAFETY HOTLINE
(800) 424-9393
Wash. D.C. Area 366-0123

U.S. Department of Transportation

National Highway Traffic Safety Administration

BEST AVAILABLE

CASE SUMMARY

NATIONAL ACCIDENT SAMPLING SYSTEM
CRASHWORTHINESS DATA SYSTEM

PSU 06 CASE NO. 057E TYPE OF ACCIDENT Van/Loss of control-Non Collision/ Rollover

A. DESCRIPTION OF THE ACCIDENT SEQUENCE AND ACCIDENT PECULIARITIES

(Provide a summary of the accident sequence as well as any particular event of the accident that is noteworthy. Injury mechanism and vehicle crashworthiness is the focus, not driver culpability. Do not include any personal identifiers.)

Vehicle 1 traveling ~~North~~ Sarah in right lane of four lane roadway, merging onto exit ramp when loss of control occurred, steering mechanism locked. Vehicle rotated unknown number of times counter-clockwise. Vehicle then departed roadway on right side and rolled over unknown number of times with final rest in upright position on grass facing East.

B. VEHICLE PROFILE(S)

Vehicle No.	Class of Vehicle	Year/Make/Model	Most Severe Damage Based on Vehicle Inspection		Component Failure
			Damage Plane	Severity Description	
01	Large Van	94/GMC/Vandura 2500	Right	Moderate	Unk.

DO NOT SANITIZE THIS FORM

HS Form 434A (1/94)

C. PERSON PROFILE(S)

Vehicle No.	Person Role	Seat Position	Restraint Use	Most Severe Injury (TO BE COMPLETED BY ZONE CENTER)			
				Body Region	Injury Type	AIS	Injury Source
01	Driver	Left Front	None used	Head	Contusion	1	Roof/header mounted console panel
	Passenger	Right Front	Lap & Shoulder	no injuries			

Body Region

Abdomen
Ankle—foot
Arm (upper)
Back-thoracolumbar spine
Brain
Chest
Ears
Eye
Elbow
Face
Forearm
Head—skull
Heart
Kidneys
Knee
Leg (lower)
Liver
Lower limbs(s) (whole or unknown part)
Mouth
Neck—cervical spine
Nose
Pelvic—hip
Pulmonary—lungs
Shoulder
Spleen
Thigh
Thyroid, other endocrine gland
Upper limb(s) (whole or unknown part)
Vertebrae
Whole body
Wrist—hand

Injury Type

Abrasion
Amputation
Avulsion
Burn
Concussion
Contusion
Crush
Detachment, separation
Dislocation
Fracture
Fracture and dislocation
Laceration
Other
Perforation, puncture
Rupture
Sprain
Strain
Total severance, transection
Unknown

Abbreviated Injury Scale

(1) Minor injury
(2) Moderate injury
(3) Serious injury
(4) Severe injury
(5) Critical injury
(6) Maximum (untreatable)
(7) Injured, unknown severity

DO NOT SANITIZE THIS FORM

U.S. Department of Transportation

National Highway Traffic Safety Administration

ACCIDENT COLLISION DIAGRAM

NATIONAL ACCIDENT SAMPLING SYSTEM
CRASHWORTHINESS DATA SYSTEM

PSU No. 06 Case Number—Stratum 057E

Indicate North

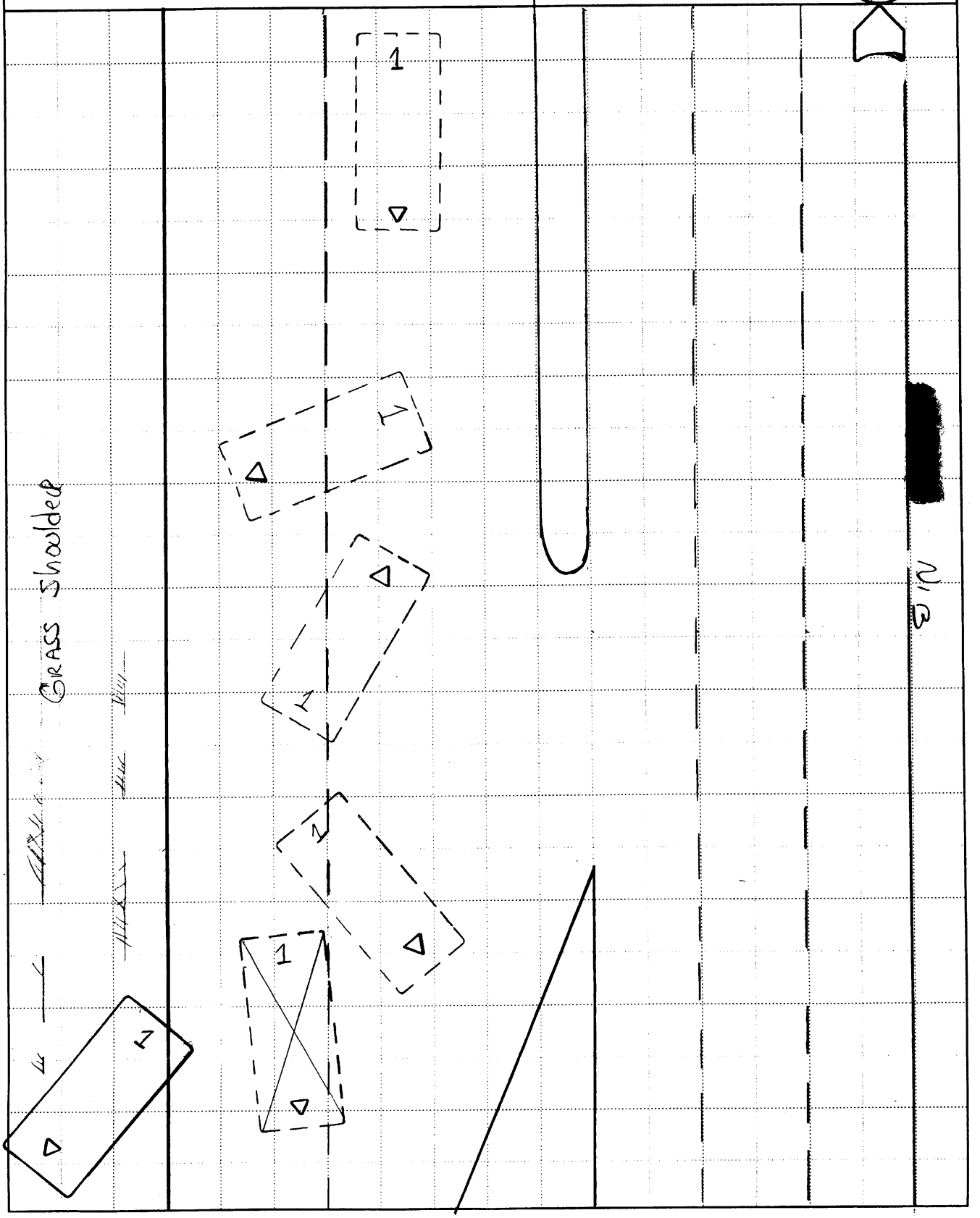

HS Form 431B (1/94)

Scale: 1 centimeter = _____ meters

U.S. Department of Transportation
National Highway Traffic Safety Administration

ACCIDENT COLLISION MEASUREMENT TABLE

NATIONAL ACCIDENT SAMPLING SYSTEM
CRASHWORTHINESS DATA SYSTEM

Primary Sampling Unit Number 06 Case Number—Stratum 0571E

ACCIDENT COLLISION DIAGRAM

LEVEL I
PHYSICAL EVIDENCE ABSENT

To be accomplished when there is no physical evidence present at the scene:

* approximate vehicle orientation at impact and final rest
* applicable road/roadway delineation (e.g., curbs/edge lines, lane markings, median markings, pavement markings, etc.)
* applicable traffic controls (e.g., speed limit)
* north arrow placed on diagram
* sketch required

LEVEL II
PHYSICAL EVIDENCE PRESENT

In addition to the level I tasks noted above, the following must be accomplished when physical evidence is present:

* document reference point and reference line relative to physical features present at the scene
* scaled documentation of all accident induced physical evidence
* scaled documentation of all roadside objects contacted
* roadway surface type and condition of applicable roadways
* grade measurements for all applicable roadways and at location of rollover initiation
* scaled representations of the vehicle(s) at pre-impact, impact, and final rest based upon either:
  a) physical evidence, or
  b) reconstructed accident dynamics

CRASH DATA

	VEH. #1	VEH. #2	VEH. #3
Heading Angle			
Surface Type	Concrete		
Surface Condition	Dry		
Grade (v/h) Measurement (between impact and final rest)	—		
Grade (v/h) Measurement (at location of rollover initiation)	—		

Reference Point: N/A Reference line: N/A

Item	Distance and Direction from Reference Point	Distance and Direction from Reference Line
	N/A	

HS Form 431A (1/94)

Item	Distance and Direction from Reference Point	Distance and Direction from Reference Line

U.S. Department of Transportation
National Highway Traffic Safety Administration

ACCIDENT FORM

NATIONAL ACCIDENT SAMPLING SYSTEM
CRASHWORTHINESS DATA SYSTEM

1. Primary Sampling Unit Number: 06
2. Case Number - Stratum: 057E

IDENTIFICATION

3. Number of General Vehicle Forms Submitted: 01
4. Date of Accident (Month,Day,Year): [redacted] / 94
5. Time of Accident: 1200

Code reported military time of accident.

NOTE: Midnight = 2400
Unknown = 9999

SPECIAL STUDIES - INDICATORS

Check (✓) each special study (SS14-SS18 below) that has been completed; code 1 for the checked special studies and 0 for the special studies not checked.

6. ___SS15 Administrative Use: 0
7. ___SS16 Pedestrian Crash Data Study: 0
8. ___SS17 Impact Fires: 0
9. ___SS18 _____: 0
10. ___SS19 _____: 0

NUMBER OF EVENTS

11. Number of Recorded Events in This Accident: 01

Code the number of events which occurred in this accident.

ACCIDENT EVENTS

For each event that occurred in the accident, code the lowest numbered vehicle in the left columns and the other involved vehicle or object on the right.

Accident Event Sequence Number	Vehicle Number	Class Of Vehicle	General Area of Damage	Vehicle Number or Object Contacted	Class Of Vehicle	General Area of Damage
12. 01	13. 01	14. 13	15. R	16. 31	17. 00	18. N
19. 02	20.	21.	22.	23.	24.	25.
26. 03	27.	28.	29.	30.	31.	32.
33. 04	34.	35.	36.	37.	38.	39.
40. 05	41.	42.	43.	44.	45.	46.

IF GREATER THAN FIVE EVENTS, CONTINUE CODING ON THE ACCIDENT EVENT SUPPLEMENT

CODES FOR CLASS OF VEHICLE

(00) Not a motor vehicle
(01) Subcompact/mini (wheelbase < 254 cm)
(02) Compact (wheelbase ≥ 254 but < 265 cm)
(03) Intermediate (wheelbase ≥ 265 but < 278 cm)
(04) Full size (wheelbase ≥ 278 but < 291 cm)
(05) Largest (wheelbase ≥ 291 cm)
(09) Unknown passenger car size
(11) Compact utility vehicle
(12) Large utility vehicle (≤ 4,500 kgs GVWR)
(13) Passenger van (≤ 4,500 kgs GVWR)
(14) Other van (≤ 4,500 kgs GVWR)
(15) Pickup truck (≤ 4,500 kgs GVWR)
(18) Other truck (≤ 4,500 kgs GVWR)
(19) Unknown light truck type
(20) School bus
(21) Other bus
(22) Truck (> 4,500 kgs GVWR)
(23) Tractor without trailer
(24) Tractor-trailer(s)
(25) Motored cycle
(28) Other vehicle
(99) Unknown

CODES FOR GENERAL AREA OF DAMAGE (GAD)

CDS APPLICABLE AND OTHER VEHICLES

(0) Not a motor vehicle
(N) Noncollision
(F) Front
(R) Right side
(L) Left side
(B) Back
(T) Top
(U) Undercarriage
(9) Unknown

TDC APPLICABLE VEHICLES

(0) Not a motor vehicle
(N) Noncollision
(F) Front
(R) Right side
(L) Left side
(B) Back of unit with cargo area (rear of trailer or straight truck)
(D) Back (rear of tractor)
(C) Rear of cab
(V) Front of cargo area
(T) Top
(U) Undercarriage
(9) Unknown

CODES FOR VEHICLE NUMBER OR OBJECT CONTACTED

(01-30) — Vehicle Number

Noncollision
(31) Overturn — rollover
(32) Fire or explosion
(33) Jackknife
(34) Other intraunit damage (specify): _____
(35) Noncollision injury
(38) Other noncollision (specify): _____
(39) Noncollision — details unknown

Collision With Fixed Object
(41) Tree (≤ 10 cm in diameter)
(42) Tree (> 10 cm in diameter)
(43) Shrubbery or bush
(44) Embankment
(45) Breakaway pole or post (any diameter)

Nonbreakaway Pole or Post
(50) Pole or post (≤ 10 cm in diameter)
(51) Pole or post (> 10 cm but ≤ 30 cm in diameter)
(52) Pole or post (> 30 cm in diameter)
(53) Pole or post (diameter unknown)
(54) Concrete traffic barrier
(55) Impact attenuator
(56) Other traffic barrier (includes guardrail) (specify): _____
(57) Fence
(58) Wall
(59) Building
(60) Ditch or culvert
(61) Ground
(62) Fire hydrant
(63) Curb
(64) Bridge
(68) Other fixed object (specify): _____
(69) Unknown fixed object

Collision with Nonfixed Object
(71) Motor vehicle not in-transport
(72) Pedestrian
(73) Cyclist or cycle
(74) Other nonmotorist or conveyance _____
(75) Vehicle occupant
(76) Animal
(77) Train
(78) Trailer, disconnected in transport
(79) Object fell from vehicle in-transport
(88) Other nonfixed object (specify): _____
(89) Unknown nonfixed object

(98) Other event (specify): _____
(99) Unknown event or object

PSU 06-057E V-01

OCCUPANT RELATED

16. Driver Presence in Vehicle: 1
(0) Driver not present
(1) Driver present
(9) Unknown

17. Number of Occupants This Vehicle: 02
(00-96) Code actual number of occupants for this vehicle
(97) 97 or more
(99) Unknown

18. Number of Occupant Forms Submitted: 02

VEHICLE WEIGHT ITEMS

19. Vehicle Curb Weight: 2,220
____Code weight to nearest 10 kilograms.
(045) Less than 450 kilograms
(610) 6,100 kilograms or more
(999) Unknown

4,900 lbs X .4536 = 2,222 kgs

Source: Major Specifications for 1994 - model trucks

20. Vehicle Cargo Weight: 9,990
____Code weight to nearest 10 kilograms.
(000) Less than 5 kilograms
(450) 4,500 kilograms or more
(999) Unknown

___,___ lbs X .4536 = ___,___ kgs

RECONSTRUCTION DATA

21. Towed Trailing Unit: 0
(0) No towed unit
(1) Yes—towed trailing unit
(9) Unknown

22. Documentation of Trajectory Data for This Vehicle: 0
(0) No
(1) Yes

23. Post Collision Condition of Tree or Pole (For Highest Delta V): 0
(0) Not collision (for highest delta V) with tree or pole
(1) Not damaged
(2) Cracked/sheared
(3) Tilted <45 degrees
(4) Tilted ≥45 degrees
(5) Uprooted tree
(6) Separated pole from base
(7) Pole replaced
(8) Other (specify):
(9) Unknown

24. Rollover: 4
(0) No rollover (no overturning)

Rollover (primarily about the longitudinal axis)
(1) Rollover, 1 quarter turn only
(2) Rollover, 2 quarter turns
(3) Rollover, 3 quarter turns
(4) Rollover, 4 or more quarter turns (specify): unk. # of times
(5) Rollover--end-over-end (i.e., primarily about the lateral axis)
(9) Rollover (overturn), details unknown

OVERRIDE/UNDERRIDE (THIS VEHICLE)

25. Front Override/Underride (this Vehicle): 0

26. Rear Override/Underride (this Vehicle): 0

(0) No override/underride, or not an end-to-end impact

Override (see specific CDC)
(1) 1st CDC
(2) 2nd CDC
(3) Other not automated CDC (specify):

Underride (see specific CDC)
(4) 1st CDC
(5) 2nd CDC
(6) Other not automated CDC (specify):

(7) Medium/heavy truck or bus override
(9) Unknown

HEADING ANGLE AT IMPACT FOR HIGHEST DELTA V

Values: (000)-(359) Code actual value
(997) Noncollision
(998) Impact with object
(999) Unknown

27. Heading Angle For This Vehicle: 997

28. Heading Angle For Other Vehicle: 997

psu 06-057E V-01

Category	Configuration	ACCIDENT TYPES (Includes Intent)
I Single Driver	A Right Roadside Departure	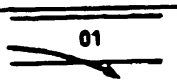 01 DRIVE OFF ROAD; 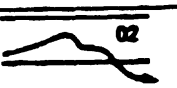 02 CONTROL/ TRACTION LOSS; 03 AVOID COLLISION WITH VEH., PED., ANIM.; 04 SPECIFICS OTHER; 05 SPECIFICS UNKNOWN
	B Left Roadside Departure	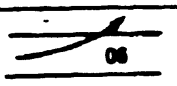 06 DRIVE OFF ROAD; 07 CONTROL/ TRACTION LOSS; 08 AVOID COLLISION WITH VEH., PED., ANIM.; 09 SPECIFICS OTHER; 10 SPECIFICS UNKNOWN
	C Forward Impact	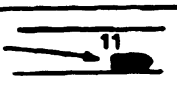 11 PARKED VEH.; 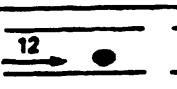 12 STA. OBJECT; 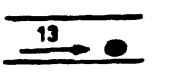 13 PEDESTRIAN/ ANIMAL; 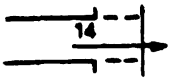 14 END DEPARTURE; 15 SPECIFICS OTHER; 16 SPECIFICS UNKNOWN
II Same Trafficway Same Direction	D Rear-End	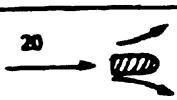 20 STOPPED 21, 22, 23; 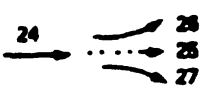 24 SLOWER 25, 26, 27; 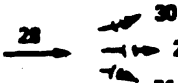 28 DECEL. 29, 30, 31; (EACH • 32) SPECIFICS OTHER; (EACH • 33) SPECIFICS UNKNOWN
	E Forward Impact	34 35 CONTROL/ TRACTION LOSS; 36 37 CONTROL/ TRACTION LOSS; 38 39 AVOID COLLISION WITH VEH.; 40 41 AVOID COLLISION WITH OBJECT; (EACH • 42) SPECIFICS OTHER; (EACH • 43) SPECIFICS UNKNOWN
	F Sideswipe Angle	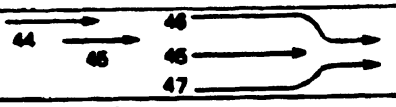 44 45 46 47; (EACH • 48) SPECIFICS OTHER; (EACH • 49) SPECIFICS UNKNOWN
III Same Trafficway Opposite Direction	G Head-On	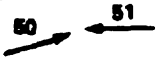 50 51 LATERAL MOVE; (EACH • 52) SPECIFICS OTHER; (EACH • 53) SPECIFICS UNKNOWN
	H Forward Impact	54 55 CONTROL/ TRACTION LOSS; 56 57 CONTROL/ TRACTION LOSS; 58 59 AVOID COLLISION WITH VEH.; 60 61 AVOID COLLISION WITH OBJECT; (EACH • 62) SPECIFICS OTHER; (EACH • 63) SPECIFICS UNKNOWN
	I Sideswipe Angle	64 65 LATERAL MOVE; (EACH • 66) SPECIFICS OTHER; (EACH • 67) SPECIFICS UNKNOWN
IV Change Trafficway Vehicle Turning	J Turn Across Path	68 69 INITIAL OPPOSITE DIRECTIONS; 70 71 72 73 INITIAL SAME DIRECTIONS; (EACH • 74) SPECIFICS OTHER; (EACH • 75) SPECIFICS UNKNOWN
	K Turn Into Path	76 77 TURN INTO SAME DIRECTION; 78 79 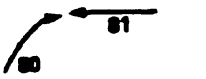 80 81 82 83 TURN INTO OPPOSITE DIRECTIONS; (EACH • 84) SPECIFICS OTHER; (EACH • 85) SPECIFICS UNKNOWN
V Intersecting Paths (Vehicle Damage)	L Straight Paths	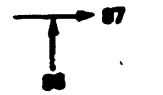 86 87 88 89; (EACH • 90) SPECIFICS OTHER; (EACH • 91) SPECIFICS UNKNOWN
VI Miscellaneous	M Backing Etc.	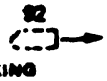 92 BACKING VEH.; 93 OTHER VEH. OR OBJECT; 98 Other Accident Type; 99 Unknown Accident Type; 00 No Impact

OTHER DATA

56. Driver's Zip Code [redacted]

(00000) Driver not present
(00001) Driver not a resident of U.S. or territories
_____ Code actual 5-digit zip code
(99999) Unknown

57. Driver's Race/Ethnic Origin 1
(0) Driver not present
(1) White (non-Hispanic)
(2) Black (non-Hispanic)
(3) White (Hispanic)
(4) Black (Hispanic)
(5) American Indian, Eskimo or Aleut
(6) Asian or Pacific Islander
(8) Other (specify): _____
(9) Unknown

58. Vehicle Special Use (This Trip) 0
(0) No special use
(1) Taxi
(2) Vehicle used as school bus
(3) Vehicle used as other bus
(4) Military
(5) Police
(6) Ambulance
(7) Fire truck or car
(8) Other (specify): _____
(9) Unknown

ROLLOVER DATA

If GV07 (Body Type) ≠ 1-49, leave GV59-GV63 blank.
If GV24 (Rollover) = 0, then GV59-GV63 must equal 0.
If GV24 = 9, then GV59-GV63 must equal 9.

59. Rollover Initiation Type 3
(0) No rollover
(1) Trip-over
(2) Flip-over
(3) Turn-over
(4) Climb-over
(5) Fall-over
(6) Bounce-over
(7) Collision with another vehicle
(8) Other rollover initiation type specify): _____
(9) Unknown rollover initiation type

60. Location of Rollover Initiation 2
(0) No rollover
(1) On roadway
(2) On shoulder—paved
(3) On shoulder—unpaved
(4) On roadside or divided trafficway median
(9) Unknown

61. Rollover Initiation Object Contacted 31

62. Location on Vehicle Where Initial Principal Tripping Force Is Applied 8
(0) No rollover
(1) Wheels/tires
(2) Side plane
(3) End plane
(4) Undercarriage
(5) Other location on vehicle (specify): _____
(8) Non-contact rollover forces (specify): _____
(9) Unknown

63. Direction of Initial Roll 1
(0) No rollover
(1) Roll right - primarily about the longitudinal axis
(2) Roll left - primarily about the longitudinal axis
(5) End-over-end (i.e., primarily about the lateral axis)
(9) Unknown roll direction

PRECRASH DATA

64. Pre-Event Movement (Prior to Recognition of Critical Event) 15
(01) Going straight
(02) Slowing or stopping in traffic lane
(03) Starting in traffic lane
(04) Stopped in traffic lane
(05) Passing or overtaking another vehicle
(06) Disabled or parked in travel lane
(07) Leaving a parking position
(08) Entering a parking position
(09) Turning right
(10) Turning left
(11) Making a U-turn
(12) Backing up (other than for parking position)
(13) Negotiating a curve
(14) Changing lanes
(15) Merging
(16) Successful avoidance maneuver to a previous critical event
(97) Other (specify): _____
(98) No driver present
(99) Unknown

psu 06-057E V-01

CODES FOR ROLLOVER INITIATION OBJECT CONTACTED

(00) No rollover
(01-30) — Vehicle Number

Noncollision
(31) Turn-over — fall-over
(33) Jackknife

Collision With Fixed Object
(41) Tree (≤ 10 cm in diameter)
(42) Tree (> 10 cm in diameter)
(43) Shrubbery or bush
(44) Embankment

(45) Breakaway pole or post (any diameter)

Nonbreakaway Pole or Post
(50) Pole or post (≤ 10 cm in diameter)
(51) Pole or post (> 10 cm but ≤ 30 cm in diameter)
(52) Pole or post (> 30 cm in diameter)
(53) Pole or post (diameter unknown)

(54) Concrete traffic barrier
(55) Impact attenuator
(56) Other traffic barrier (includes guardrail) (specify):_____

(57) Fence
(58) Wall
(59) Building
(60) Ditch or culvert
(61) Ground
(62) Fire hydrant
(63) Curb
(64) Bridge
(68) Other fixed object (specify):

_____
(69) Unknown fixed object

Collision with Nonfixed Object
(71) Motor vehicle not in-transport
(76) Animal
(77) Train
(78) Trailer, disconnected in transport
(79) Object fell from vehicle in-transport
(88) Other nonfixed object (specify):

_____
(89) Unknown nonfixed object

(98) Other event (specify):

_____
(99) Unknown event or object

U.S. Department of Transportation
National Highway Traffic Safety Administration

EXTERIOR VEHICLE FORM

NATIONAL ACCIDENT SAMPLING SYSTEM
CRASHWORTHINESS DATA SYSTEM

1. Primary Sampling Unit Number: 06
2. Case Number - Stratum: 057E
3. Vehicle Number: 01

VEHICLE IDENTIFICATION

VIN 1GDEG25K8RF[redacted] Model Year 94

Vehicle Make (specify): Gmc Vehicle Model (specify): Vandura 2500

LOCATOR

Locate the end of the damage with respect to the vehicle longitudinal center line or bumper corner for end impacts or an undamaged axle for side impacts.

Specific Impact No.	Location of Direct Damage	Location of Field L
	ALL ROLLOVER DAMAGE	

CRUSH PROFILE IN CENTIMETERS

NOTES: Identify the plane at which the C-measurements are taken (e.g., at bumper, above bumper, at sill, above sill, etc.) and label adjustments (e.g., free space).

Measure and document on the vehicle diagram the location of maximum crush.

Measure C1 to C6 from driver to passenger side in front or rear impacts and rear to front in side impacts.

Free space value is defined as the distance between the baseline and the original body contour taken at the individual C locations. This may include the following: bumper lead, bumper taper, side protrusion, side taper, etc. Record the value for each C-measurement and maximum crush.

Use as many lines/columns as necessary to describe each damage profile.

Specific Impact Number	Plane of Impact C-Measurements	Direct Damage Width (CDC)	Direct Damage Max Crush	Field L	C_1	C_2	C_3	C_4	C_5	C_6	±D

ALL ROLLOVER DAMAGE

VEHICLE DAMAGE SKETCH

TIRE—WHEEL DAMAGE

a. Rotation physically restricted

RF 2
LF 2
RR 9
LR 9

b. Tire deflated

RF 2
LF 2
RR 9
LR 9

(1) Yes (2) No (8) NA (9) Unk.

TYPE OF TRANSMISSION

☐ Manual ☑ Automatic

ORIGINAL SPECIFICATIONS

Wheelbase	318	cm
Overall Length	518	cm
Maximum Width	202	cm
Curb Weight	2,222	kg
Average Track	180	cm
Front Overhang	80	cm
Rear Overhang	120	cm
Undeformed End Width		cm
Engine Size: cyl./displ.	V-6	L

WHEEL STEER ANGLES

(For locked front wheels or displaced rear axles only)

RF ± ___ ___ o
LF ± ___ ___ o
RR ± ___ ___ o
LR ± ___ ___ o

Within ± 5 degrees

DRIVE WHEELS

☑ FWD ☐ RWD ☐ 4WD

Approximate Cargo Weight 99 kg

NO DIRECT DAMAGE - ALL ROLLOVER

MEASUREMENTS IN CENTIMETERS

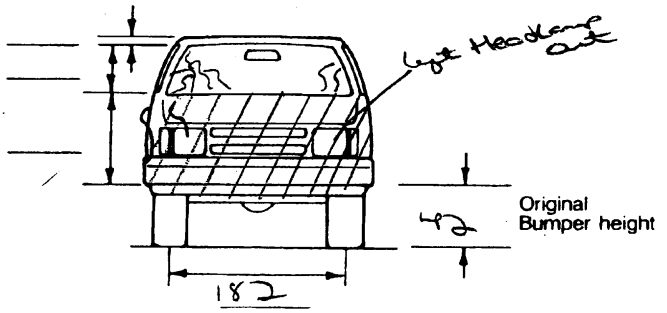

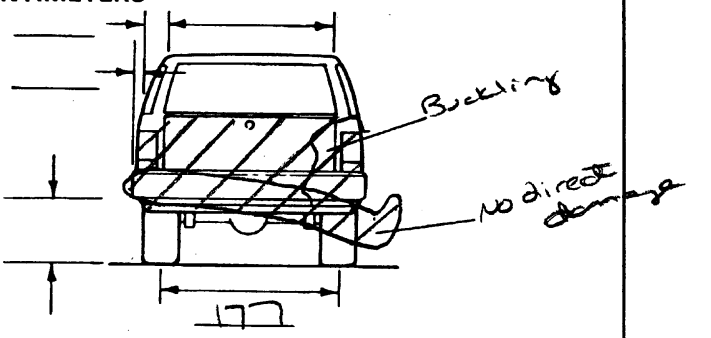

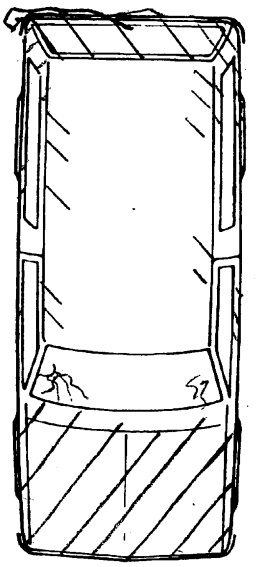

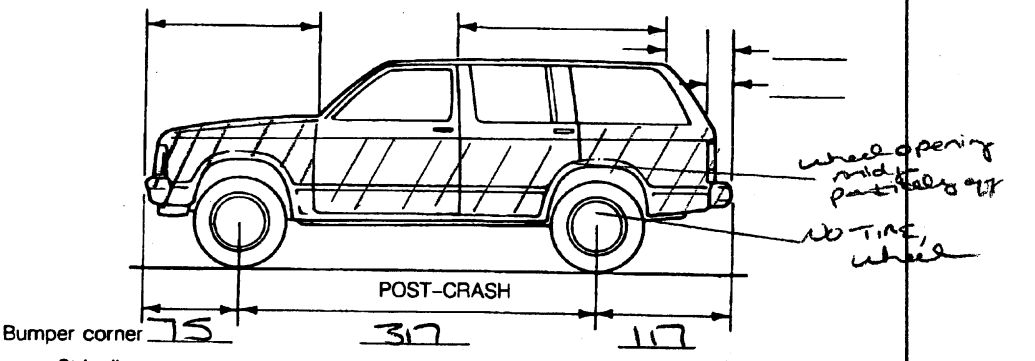

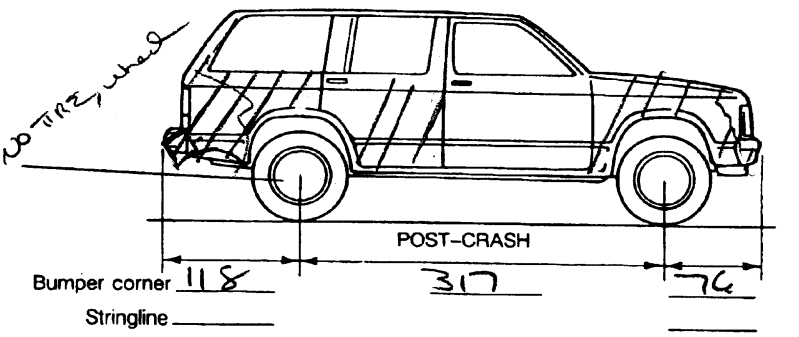

NOTES: Sketch new perimeter and cross hatch direct damage and single hatch induced damage on all views. Annotate observations which might be useful in reconstructing the accident (e.g., grass in tire bead, direction of striations, scuff on sidewalls, etc.). If pulling trailer, sketch type of trailer and damage received on the back of this page.

Annotate any damage caused by extrication such as component removal by torching, prying, or hydraulic shears.

CDC WORKSHEET

CODES FOR OBJECT CONTACTED

(01-30) — Vehicle Number

Noncollision
- (31) Overturn — rollover
- (32) Fire or explosion
- (33) Jackknife
- (34) Other intraunit damage (specify): _____
- (35) Noncollision injury
- (38) Other noncollision (specify): _____
- (39) Noncollision — details unknown

Collision With Fixed Object
- (41) Tree (≤ 10 cm in diameter)
- (42) Tree (> 10 cm in diameter)
- (43) Shrubbery or bush
- (44) Embankment
- (45) Breakaway pole or post (any diameter)

Nonbreakaway Pole or Post
- (50) Pole or post (≤ 10 cm in diameter)
- (51) Pole or post (> 10 cm but ≤ 30 cm in diameter)
- (52) Pole or post (> 30 cm in diameter)
- (53) Pole or post (diameter unknown)
- (54) Concrete traffic barrier
- (55) Impact attenuator
- (56) Other traffic barrier (includes guardrail) (specify): _____
- (57) Fence
- (58) Wall
- (59) Building
- (60) Ditch or culvert
- (61) Ground
- (62) Fire hydrant
- (63) Curb
- (64) Bridge
- (68) Other fixed object (specify): _____
- (69) Unknown fixed object

Collision with Nonfixed Object
- (71) Motor vehicle not in-transport
- (72) Pedestrian
- (73) Cyclist or cycle
- (74) Other nonmotorist or conveyance
- (75) Vehicle occupant
- (76) Animal
- (77) Train
- (78) Trailer, disconnected in transport
- (79) Object fell from vehicle in-transport
- (88) Other nonfixed object (specify): _____
- (89) Unknown nonfixed object
- (98) Other event (specify): _____
- (99) Unknown event or object

DEFORMATION CLASSIFICATION BY EVENT NUMBER

Accident Event Sequence Number	Object Contacted	(1) (2) Direction of Force (degrees)	Incremental Value of Shift	(3) Deformation Location	(4) Specific Longitudinal or Lateral Location	(5) Specific Vertical or Lateral Location	(6) Type of Damage Distribution	(7) Deformation Extent
01	31	000	00	R	D	D	0	02

COLLISION DEFORMATION CLASSIFICATION

HIGHEST DELTA "V"

Accident Event Sequence Number	Object Contacted	(1) (2) Direction of Force	(3) Deformation Location	(4) Longitudinal or Lateral Location	(5) Vertical or Lateral Location	(6) Type of Damage Distribution	(7) Deformation Extent
4. 01	5. 31	6. 00	7. R	8. D	9. D	10. O	11. 02

Second Highest Delta "V"

12.	13.	14.	15.	16.	17.	18.	19.

CRUSH PROFILE IN CENTIMETERS

The crush profile for the damage described in the CDC(s) above should be documented in the appropriate space below. (ALL MEASUREMENTS ARE IN CENTIMETERS.)

HIGHEST DELTA "V"

20. L	21. C_1	C_2	C_3	C_4	C_5	C_6	22. ±D
000	000	000	000	000	000	000	1000

Second Highest Delta "V"

23. L	24. C_1	C_2	C_3	C_4	C_5	C_6	25. ±D
							1

26. Are CDCs Documented but Not Coded on The Automated File? O
(0) No
(1) Yes

27. Researcher's Assessment of Vehicle Disposition 1
(0) Not towed due to vehicle damage
(1) Towed due to vehicle damage
(9) Unknown

28. Original Wheelbase 318
_____Code to the nearest centimeter
(999) Unknown

____.__ inches X 2.54 = ____ centimeters

29. Is This A Multi-Stage Manufactured Vehicle And/Or A Certified Altered Vehicle? 9
    (0) No post manufacturer modifications
    (1) Yes - post manufacturer modifications (specify): _____
    _____
    _____
    (Include photograph of CERTIFICATION PLACARD in case report)
    (9) Unknown if vehicle is modified

30. Fire Occurrence 0
    (0) No fire

    Yes, fire occurred
    (1) Minor
    (2) Major
    (9) Unknown

31. Origin of Fire 0
    (0) No fire
    (1) Vehicle exterior (front, side, back, top)
    (2) Exhaust system
    (3) Fuel tank (and other fuel retention system parts)
    (4) Engine compartment
    (5) Cargo/trunk compartment
    (6) Instrument panel
    (7) Passenger compartment area
    (8) Other location (specify):
    _____
    (9) Unknown

32. Type of Fuel Tank-1 1

33. Type of Fuel Tank-2 0
    (0) No fuel tank (electrical vehicle)
    (1) Metallic
    (2) Non-metallic
    (9) Unknown

34. Fuel Tank-1 Location 2

35. Fuel Tank-2 Location 0
    (0) No fuel tank
    (1) Aft of center of the rear wheels (rear axle) centered
    (2) Aft of center of the rear wheels (rear axle) left side
    (3) Aft of center of the rear wheels (rear axle) right side
    (4) Forward of center of the rear wheels (rear axle) centered
    (5) Forward of center of the rear wheels (rear axle) left side
    (6) Forward of center of the rear wheels (rear axle) right side
    (7) Over center of the rear wheels (rear axle)
    (8) Other (specify):
    _____
    (9) Unknown

36. Fuel Tank-1 Filler Cap Location 2

37. Fuel Tank-2 Filler Cap Location 0
    (0) No fuel tank
    (1) On back plane
    (2) Aft of center of the rear wheels (rear axle) on left side plane
    (3) Aft of center of the rear wheels (rear axle) on right side plane
    (4) Forward of center of the rear wheels (rear axle) on left side plane
    (5) Forward of center of the rear wheels (rear axle) on right side plane
    (6) Over the center of the rear wheels (rear axle) on left side plane
    (7) Over the center of the rear wheels (rear axle) on right side plane
    (8) Other (specify):_____
    (9) Unknown

38. Fuel Tank-1 Damage 1

39. Fuel Tank-2 Damage 0
    (0) No fuel tank
    (1) No damage to fuel tank
    (2) Deformed, no seam failure
    (3) Deformed, with a seam failure
    (4) Punctured
    (5) Lacerated (ripped)
    (6) Abraded (scraped)
    (7) Filler neck separation from the fuel tank
    (8) Other damage (specify):
    _____
    (9) Unknown

40. Location of Fuel System-1 Leakage 1

41. Location of Fuel System-2 Leakage 0
    (0) No fuel tank
    (1) No fuel leakage

    Primary Area Of Leakage
    (2) Tank
    (3) Filler neck
    (4) Cap
    (5) Lines/pump/filter
    (6) Vent/emission recovery
    (8) Other (specify): _____
    (9) Unknown

42. Fuel Type-1 01

43. Fuel Type-2 00

    Single Fuel Type
    (00) No fuel tank
    (01) Gasoline
    (02) Diesel
    (03) CNG (Compressed Natural Gas)
    (04) LPG (Liquid Petroleum Gas) also known as Propane
    (05) LNG (Liquid Natural Gas)
    (06) Methanol (M100 or M85)
    (07) Ethanol (E100 or E85)
    (08) Other (Hydrogen or others) (specify): _____

    Electric Powered or Electric/Solar Powered Vehicles
    (10) Lead Acid Battery
    (11) Nickel-Iron Battery
    (12) Nickel-Cadmium Battery
    (13) Sodium Metal Chloride Battery
    (14) Sodium Sulfur Battery
    (18) Other (Specify): _____

    (98) Other Hybrid (specify): _____

    (99) Unknown fuel type

44. Is This Vehicle Equipped With More Than Two Fuel Tanks? X
    (0) No (one or two tanks only) 0

    Yes - More Than Two Tanks
    (1) Yes -- no damage to any tank or filler cap and no fuel system leakage
    (2) Yes -- no damage to any tank or filler cap but there is fuel system leakage (specify leakage location): _____
    (3) Yes -- damage to an additional tank or filler cap and there is fuel system leakage (specify the following):
        Type of tank _____
        Tank location _____
        Filler cap location _____
        Tank damage _____
        Location of leakage _____
        Type of fuel _____
    (9) Unknown if more than two tanks

COMMENTS

_____

_____

_____

_____

_____

_____

_____

_____

_____

_____

_____

*** STOP: IF THE CDS APPLICABLE VEHICLE WAS NOT TOWED AND WAS NOT AN AOPS *** (I.E., GV09=0 OR 9 AND GV36=0), DO NOT COMPLETE THE INTERIOR VEHICLE FORM.

U.S. Department of Transportation
National Highway Traffic Safety Administration

INTERIOR VEHICLE FORM

NATIONAL ACCIDENT SAMPLING SYSTEM
CRASHWORTHINESS DATA SYSTEM

1. Primary Sampling Unit Number: 06
2. Case Number - Stratum: 0571E
3. Vehicle Number: 01

INTEGRITY

4. Passenger Compartment Integrity: 00

(00) No integrity loss

Yes, Integrity Was Lost Through
(01) Windshield
(02) Door (side)
(03) Door/hatch (back door)
(04) Roof
(05) Roof glass
(06) Side window
(07) Rear window (backlight)
(08) Roof and roof glass
(09) Windshield and door (side)
(10) Windshield and roof
(11) Side and rear window (side window and backlight)
(12) Windshield and side window
(13) Door and side window
(98) Other combination of above (specify): _____
(99) Unknown

Door, Tailgate or Hatch Opening

5. LF 1 6. RF 1 7. LR 1 8. RR 1 9. TG/H 8

(0) No door/gate/hatch
(1) Door/gate/hatch remained closed and operational
(2) Door/gate/hatch came open during collision
(3) Door/gate/hatch jammed shut
(8) Other (specify): VAN Rear doors (remained closed)
(9) Unknown

Damage/Failure Associated with Door, Tailgate or Hatch Opening in Collision. If IV05-IV09 ≠ 2, Then code Ø

10. LF 0 11. RF 0 12. LR 0 13. RR 0 14. TG/H 0

(0) No door/gate/hatch or door not opened

Door, Tailgate or Hatch Came Open During Collision
(1) Door operational (no damage)
(2) Latch/striker failure due to damage
(3) Hinge failure due to damage
(4) Door structure failure due to damage
(5) Door support (i.e., pillar, sill, roof side rail, etc.) failure due to damage
(6) Latch/striker and hinge failure due to damage
(8) Other failure (specify): _____
(9) Unknown

GLAZING

Glazing Damage from Impact Forces

15. WS 2 16. LF 0 17. RF 0 18. LR 0 19. RR 0
20. BL 0 21. Roof 0 22. Other 0

(0) No glazing damage from impact forces
(2) Glazing in place and cracked from impact forces
(3) Glazing in place and holed from impact forces
(4) Glazing out-of-place (cracked or not) and not holed from impact forces
(5) Glazing out-of-place and holed from impact forces
(6) Glazing disintegrated from impact forces
(7) Glazing removed prior to accident
(8) No glazing
(9) Unknown if damaged

Glazing Damage from Occupant Contact

23. WS 0 24. LF 0 25. RF 0 26. LR 0 27. RR 0
28. BL 0 29. Roof 0 30. Other 0

(0) No occupant contact to glazing or no glazing
(1) Glazing contacted by occupant but no glazing damage
(2) Glazing in place and cracked by occupant contact
(3) Glazing in place and holed by occupant contact
(4) Glazing out-of-place (cracked or not) by occupant contact and not holed by occupant contact
(5) Glazing out-of-place by occupant contact and holed by occupant contact
(6) Glazing disintegrated by occupant contact
(9) Unknown if contacted by occupant

If No Glazing Damage *And* No Occupant Contact or No Glazing, Then Code IV31 Through IV46 As Ø

Type of Window/Windshield Glazing

31. WS 1 32. LF 0 33. RF 0 34. LR 0 35. RR 0
36. BL 0 37. Roof 0 38. Other 0

(0) No glazing contact and no damage, or no glazing
(1) AS-1 — Laminated
(2) AS-2 — Tempered
(3) AS-3 — Tempered-tinted
(4) AS-14 — Glass/Plastic
(8) Other (specify): _____
(9) Unknown

Window Precrash Glazing Status

39. WS 1 40. LF 0 41. RF 0 42. LR 0 43. RR 0
44. BL 0 45. Roof 0 46. Other 0

(0) No glazing contact and no damage, or no glazing
(1) Fixed
(2) Closed
(3) Partially opened
(4) Fully opened
(9) Unknown

INTRUSION WORKSHEET

Note: Sketch intruded areas

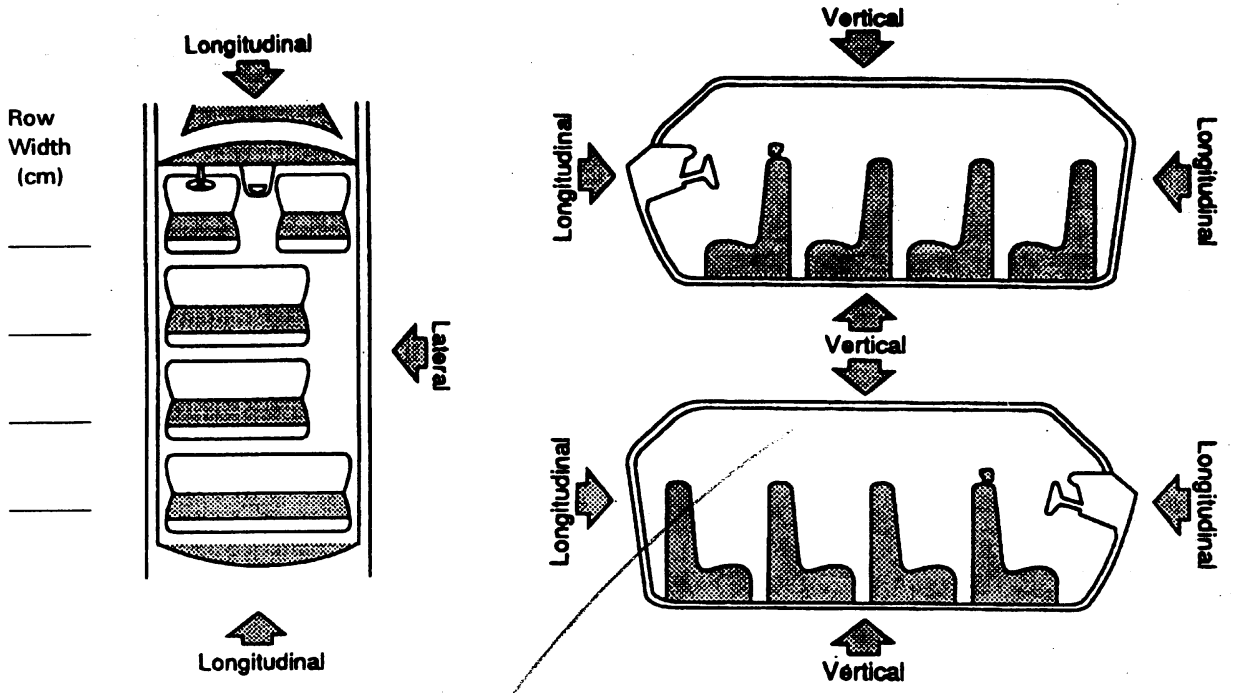

(All Measurements Are In Centimeters)

LOCATION OF INTRUSION	INTRUDED COMPONENT	COMPARISON VALUE	—	INTRUDED VALUE	=	INTRUSION	DOMINANT CRUSH DIRECTION
			—		=		
			—		=		
			—		=		
			—		=		
			—		=		
			—		=		
			—		=		
			—		=		
			—		=		
			—		=		
			—		=		
			—		=		
			—		=		
			—		=		
			—		=		

Document no more than the 15 most severe intrusions

OCCUPANT AREA INTRUSION

Note: If no intrusions, leave variables IV47-IV86 blank.

	Location of Intrusion	Intruding Component	Magnitude of Intrusion	Dominant Crush Direction
1st	47.___ ___	48.___ ___	49.___	50.___
2nd	51.___ ___	52.___ ___	53.___	54.___
3rd	55.___ ___	56.___ ___	57.___	58.___
4th	59.___ ___	60.___ ___	61.___	62.___
5th	63.___ ___	64.___ ___	65.___	66.___
6th	67.___ ___	68.___ ___	69.___	70.___
7th	71.___ ___	72.___ ___	73.___	74.___
8th	75.___ ___	76.___ ___	77.___	78.___
9th	79.___ ___	80.___ ___	81.___	82.___
10th	83.___ ___	84.___ ___	85.___	86.___

LOCATION OF INTRUSION

Front Seat
- (11) Left
- (12) Middle
- (13) Right

Second Seat
- (21) Left
- (22) Middle
- (23) Right

Third Seat
- (31) Left
- (32) Middle
- (33) Right

Fourth Seat
- (41) Left
- (42) Middle
- (43) Right

- (97) Catastrophic
- (98) Other enclosed area (specify) _____
- (99) Unknown

INTRUDING COMPONENT

Interior Components
- (01) Steering assembly
- (02) Instrument panel left
- (03) Instrument panel center
- (04) Instrument panel right
- (05) Toe pan
- (06) A (A1/A2)-pillar
- (07) B-pillar
- (08) C-pillar
- (09) D-pillar
- (10) Door panel (side)
- (12) Roof (or convertible top)
- (13) Roof side rail
- (14) Windshield
- (15) Windshield header
- (16) Window frame
- (17) Floor pan (includes sill)
- (18) Backlight header
- (19) Front seat back
- (20) Second seat back
- (21) Third seat back
- (22) Fourth seat back
- (23) Fifth seat back
- (24) Seat cushion
- (25) Back door/panel (e.g., tailgate)
- (26) Other interior component (specify): _____
- (27) Side panel - forward of the A (A2)-pillar
- (28) Side panel - rear of the A (A2)-pillar

Exterior Components
- (30) Hood
- (31) Outside surface of this vehicle (specify): _____
- (32) Other exterior object in the environment (specify): _____
- (33) Unknown exterior object
- (97) Catastrophic
- (98) Intrusion of unlisted component(s) (specify): _____
- (99) Unknown

MAGNITUDE OF INTRUSION
- (1) ≥ 3 centimeters but < 8 centimeters
- (2) ≥ 8 centimeters but < 15 centimeters
- (3) ≥ 15 centimeters but < 30 centimeters
- (4) ≥ 30 centimeters but < 46 centimeters
- (5) ≥ 46 centimeters but < 61 centimeters
- (6) ≥ 61 centimeters
- (7) Catastrophic
- (9) Unknown

DOMINANT CRUSH DIRECTION
- (1) Vertical
- (2) Longitudinal
- (3) Lateral
- (7) Catastrophic
- (9) Unknown

STEERING RIM/SPOKE DEFORMATION

(All Measurements Are in Centimeters)

COMPARISON VALUE	—	DAMAGE VALUE	=	DEFORMATION
	—		=	
	—		=	
	—		=	
	—		=	

STEERING COLUMN

87. Steering Column Type: 2
(1) Fixed column
(2) Tilt column
(3) Telescoping column
(4) Tilt and telescoping column
(8) Other column type (specify): _____
(9) Unknown

88. Blank: X X
(This variable is left blank so that numbering consistency can be maintained with the 1988-94 CDS.

89. Blank: X X X
(This variable is left blank so that numbering consistency can be maintained with the 1988-94 CDS.

90. Blank: X X X
(This variable is left blank so that numbering consistency can be maintained with the 1988-94 CDS.

91. Blank: X X X
(This variable is left blank so that numbering consistency can be maintained with the 1988-94 CDS.

92. Steering Rim/Spoke Deformation: 0 0
_____Code actual measured deformation to the nearest centimeter
(00) No steering rim deformation
(01-14) Actual measured value in centimeters
(15) 15 centimeters or more
(98) Observed deformation cannot be measured
(99) Unknown

93. Location of Steering Rim/Spoke Deformation: 0 0
(00) No steering rim deformation

Quarter Sections
(01) Section A
(02) Section B
(03) Section C
(04) Section D

Half Sections
(05) Upper half of rim/spoke
(06) Lower half of rim/spoke
(07) Left half of rim/spoke
(08) Right half of rim/spoke

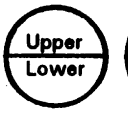

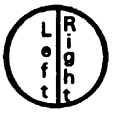

(09) Complete steering wheel collapse
(10) Undetermined location
(99) Unknown

INSTRUMENT PANEL

94. Odometer Reading: 0 15,000
_____kilometers—Code to the nearest 1,000 kilometers
(000) No odometer
(001) Less than 1,500 kilometers
(500) 499,500 kilometers or more
(999) Unknown

9619 miles X 1.6093 = 15,479 kilometers

Source: Vehicle Inspection

95. Instrument Panel Damage from Occupant Contact? 0
(0) No
(1) Yes
(9) Unknown

96. Knee Bolsters Deformed from Occupant Contact? 8
(0) No
(1) Yes
(8) Not present
(9) Unknown

97. Did Glove Compartment Door Open During Collision(s)? 8
(0) No
(1) Yes
(8) Not present
(9) Unknown

VEHICLE INTERIOR SKETCHES

Note area of ejection/entrapment

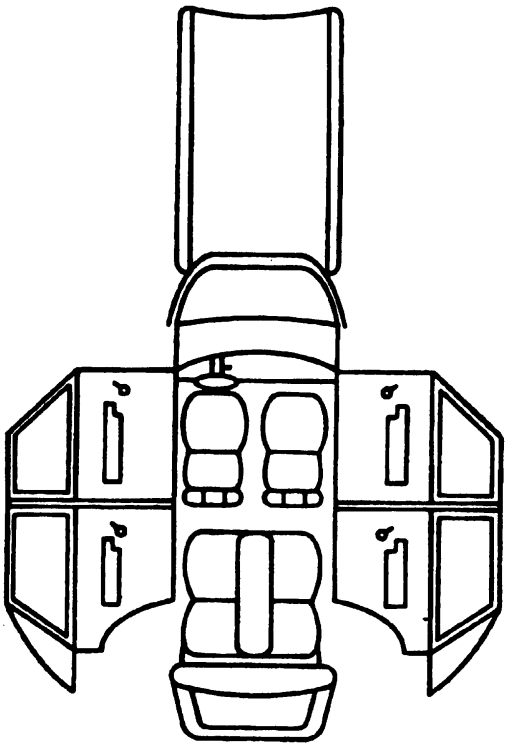

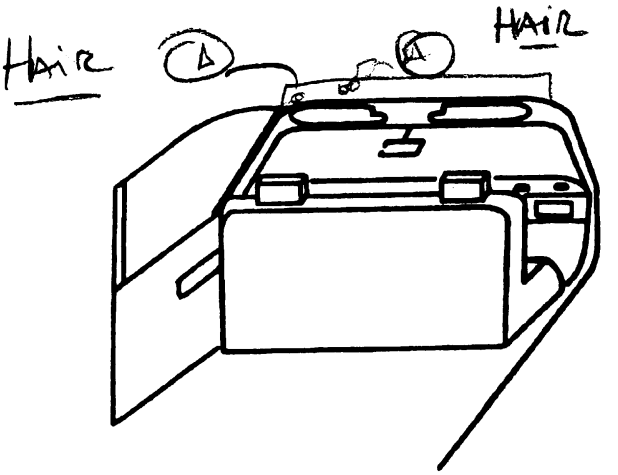

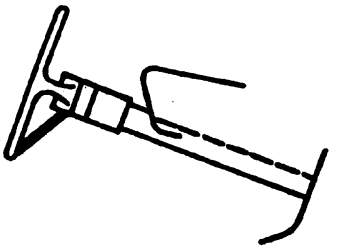

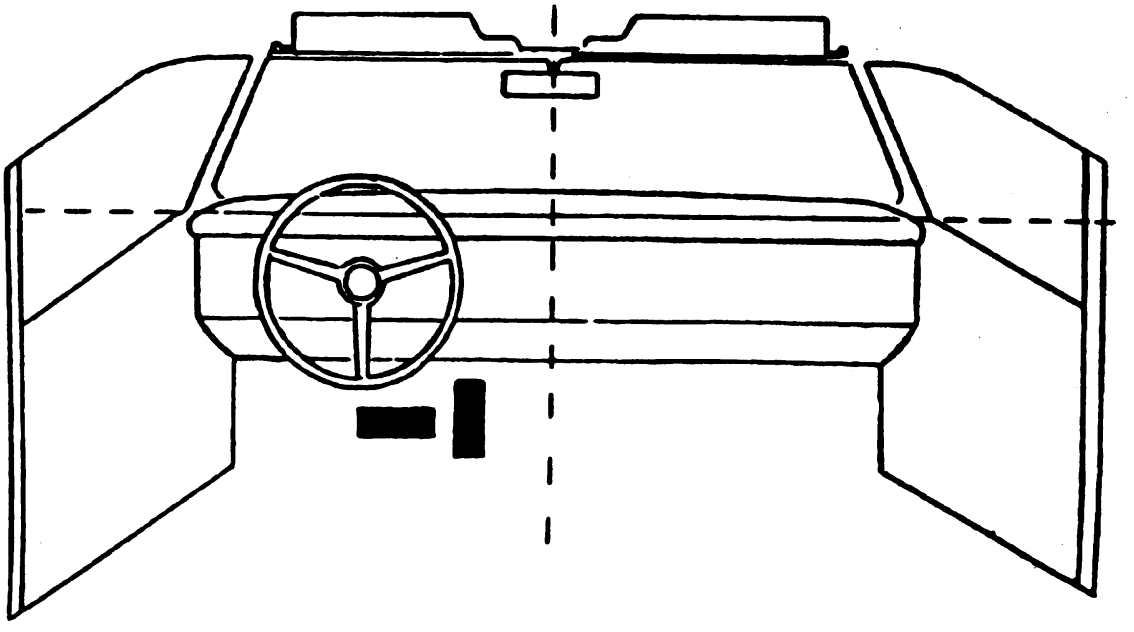

Sketch windshield contact(s) and the damaged area(s) on the instrument panel outline (e.g., radio, glove compartment, damage to instrument panel structure.
Cross hatch contact points, draw spider webs or use other annotation as may be appropriate.
Annotate the contacted area with a letter (begin with A) and list on the Points of Occupant Contact page.

POINTS OF OCCUPANT CONTACT

Contact	Interior Component Contacted	Occupant No. If Known	Body Region If Known	Supporting Physical Evidence	Confidence Level of Contact Point
A	19	1	Head	hair	1
B					
C					
D					
E					
F					
G					
H					
I					
J					
K					
L					
M					
N					

CODES FOR INTERIOR COMPONENTS

FRONT
- (01) Windshield
- (02) Mirror
- (03) Sunvisor
- (04) Steering wheel rim
- (05) Steering wheel hub/spoke
- (06) Steering wheel (combination of codes 04 and 05)
- (07) Steering column, transmission selector lever, other attachment
- (08) Add on equipment (e.g., CB, tape deck, air conditioner)
- (09) Left instrument panel and below
- (10) Center instrument panel and below
- (11) Right instrument panel and below
- (12) Glove compartment door
- (13) Knee bolster
- (14) Windshield including one or more of the following: front header, A (A1/A2)-pillar, instrument panel, mirror, or steering assembly (driver side only)
- (15) Windshield including one or more of the following: front header, A (A1/A2)-pillar, instrument panel, or mirror (passenger side only)
- (16) Driver side air bag compartment cover
- (17) Passenger side air bag compartment cover
- (18) Windshield reinforced by exterior object (specify):_____
- (19) Other front object (specify): Providing pressure above Windshield Head

LEFT SIDE
- (20) Left side interior surface, excluding hardware or armrests
- (21) Left side hardware or armrest
- (22) Left A (A1/A2)-pillar
- (23) Left B-pillar
- (24) Other left pillar (specify):_____
- (25) Left side window glass or frame
- (26) Left side window glass including one or more of the following: frame, window sill, A (A1/A2)-pillar, B-pillar, or roof side rail.
- (27) Other left side object (specify):_____
- (28) Left side window sill

RIGHT SIDE
- (30) Right side interior surface, excluding hardware or armrests
- (31) Right side hardware or armrest
- (32) Right A (A1/A2)-pillar
- (33) Right B-pillar
- (34) Other right pillar (specify):_____
- (35) Right side window glass or frame
- (36) Right side window glass including one or more of the following: frame, window sill, A (A1/A2)-pillar, B pillar, or roof side rail.
- (37) Other right side object (specify):_____
- (38) Right side window sill

INTERIOR
- (40) Seat, back support
- (41) Belt restraint webbing/buckle
- (42) Belt restraint B-pillar attachment point
- (43) Other restraint system component (specify):_____
- (44) Head restraint system
- (45) Air bag (use codes "16" and "17" for injuries sustained from air bag compartment covers)
- (46) Other occupants (specify):_____
- (47) Interior loose objects
- (48) Child safety seat (specify):_____
- (49) Other interior object (specify):_____

ROOF
- (50) Front header
- (51) Rear header
- (52) Roof left side rail
- (53) Roof right side rail
- (54) Roof or convertible top

FLOOR
- (56) Floor (including toe pan)
- (57) Floor or console mounted transmission lever, including console
- (58) Parking brake handle
- (59) Foot controls including parking brake

REAR
- (60) Backlight (rear window)
- (61) Backlight storage rack, door, etc.
- (62) Other rear object (specify):_____

CONFIDENCE LEVEL OF CONTACT POINT
- (1) Certain
- (2) Probable
- (3) Possible
- (9) Unknown

AUTOMATIC RESTRAINTS

NOTES: Encode the data for each applicable front seat position. The attribute for the variables may be found below. Restraint systems should be assessed during the vehicle inspection then coded on the Occupant Assessment Form.

AIR BAGS

		Left	Right
FIRST	Availability/Function		
	Deployment		
	Failure		

Air Bag System Availability/Function
- (0) Not equipped/not available
- (1) Air bag

Non-functional
- (2) Air bag disconnected (specify): _____
- (3) Air bag not reinstalled
- (9) Unknown

Air Bag System Deployment
- (0) Not equipped/not available
- (1) Air bag deployed during accident (as a result of impact)
- (2) Air bag deployed inadvertently just prior to accident
- (3) Air bag deployed, accident sequence undetermined
- (4) Nondeployed
- (5) Unknown if deployed
- (6) Air bag deployed as a result of a noncollision event during accident sequence (e.g., fire, explosion, electrical)
- (9) Unknown

Are There Indications of Air Bag System Failure?
- (0) Not equipped/not available
- (1) No
- (2) Yes (specify): _____
- (9) Unknown

AUTOMATIC BELTS

		Left	Right
FIRST	Availability/Function		
	Use		
	Type		
	Proper Use		
	Failure Modes		

Automatic (Passive) Belt System Availability/Function
- (0) Not equipped/not available
- (1) 2 point automatic belts
- (2) 3 point automatic belts
- (3) Automatic belts - type unknown

Non-functional
- (4) Automatic belts destroyed or rendered inoperative
- (9) Unknown

Automatic (Passive) Belt System Use
- (0) Not equipped/not available/destroyed or rendered inoperative
- (1) Automatic belt in use
- (2) Automatic belt not in use (manually disconnected, motorized track inoperative)
- (3) Automatic belt use unknown
- (9) Unknown

Automatic (Passive) Belt System Type
- (0) Not equipped/not available
- (1) Non-motorized system
- (2) Motorized system
- (9) Unknown

Proper Use of Automatic (Passive) Belt System
- (0) Not equipped/not available/not used
- (1) Automatic belt used properly
- (2) Automatic belt used properly with child safety seat

Automatic Belt Used Improperly
- (3) Automatic shoulder belt worn under arm
- (4) Automatic shoulder belt worn behind back
- (5) Automatic belt worn around more than one person
- (6) Lap portion of automatic belt worn on abdomen
- (7) Automatic lap and shoulder belt or automatic shoulder belt used improperly with child safety seat (specify): _____
- (8) Other improper use of automatic belt system (specify): _____
- (9) Unknown

Automatic (Passive) Belt Failure Modes During Accident
- (0) Not equipped/not available/not in use
- (1) No automatic belt failure(s)
- (2) Torn webbing (stretched webbing not included)
- (3) Broken buckle or latchplate
- (4) Upper anchorage separated
- (5) Other anchorage separated (specify): _____
- (6) Broken retractor
- (7) Combination of above (specify):
- (8) Other automatic belt failure (specify): _____
- (9) Unknown

MANUAL RESTRAINTS

NOTES: Encode the applicable data **for each seat position** in the vehicle. The attribute for the variable may be found below. Restraint systems should be assessed during the vehicle inspection then coded on the Ocupant Assessment Form.

If a Child safety seat is present, encode the data on the back of this page.

If the vehicle has automatic restraints available, encode the appropriate data on the back of the previous page.

		Left	Center	Right
FIRST	Availability	4	0	4
	Evidence of usage	00	00	1
	Used in this crash?	NO	00	YES
	Proper Use	0	00	1
	Failure Modes	0	0	1
SECOND	Availability	04	0	04
	Evidence of usage	00	00	00
	Used in this crash?	00	0	0
	Proper Use	00	0	0
	Failure Modes	0	0	0
OTHER	Availability	4	3	4
	Evidence of usage	00	00	00
	Used in this crash?	0	0	0
	Proper Use	0	0	0
	Failure Modes	0	0	0

Manual (Active) Belt System Availability
- (0) None available
- (1) Belt removed/destroyed
- (2) Shoulder belt
- (3) Lap belt
- (4) Lap and shoulder belt
- (5) Belt available - type unknown

Integral Belt Partially Destroyed
- (6) Shoulder belt (lap belt destroyed/removed)
- (7) Lap belt (shoulder belt destroyed/removed)
- (8) Other belt (specify): _____
- (9) Unknown

Manual (Active) Belt System Use
- (00) None used, not available, or belt removed/destroyed
- (01) Inoperable (specify): _____
- (02) Shoulder belt
- (03) Lap belt
- (04) Lap and shoulder belt
- (05) Belt used - type unknown
- (08) Other belt used (specify): _____
- (12) Shoulder belt used with child safety seat
- (13) Lap belt used with child safety seat
- (14) Lap and shoulder belt used with child safety seat
- (15) Belt used with child safety seat - type unknown
- (18) Other belt used with child safety seat (specify): _____
- (99) Unknown if belt used

Proper Use of Manual (Active) Belts
- (0) None used or not available
- (1) Belt used properly
- (2) Belt used properly with child safety seat

Belt Used Improperly
- (3) Shoulder belt worn under arm
- (4) Shoulder belt worn behind back or seat
- (5) Belt worn around more than one person
- (6) Lap belt worn on abdomen
- (7) Lap belt or lap and shoulder belt used improperly with child safety seat (specify): _____
- (8) Other improper use of manual belt system (specify): _____
- (9) Unknown

Manual (Active) Belt Failure Modes During Accident
- (0) No manual belt used or not available
- (1) No manual belt failure(s)
- (2) Torn webbing (stretched webbing not included)
- (3) Broken buckle or latchplate
- (4) Upper anchorage separated
- (5) Other anchorage separated (specify): _____
- (6) Broken retractor
- (7) Combination of above (specify): _____
- (8) Other manual belt failure (specify): _____
- (9) Unknown

BEST AVAILABLE

CHILD SAFETY SEAT FIELD ASSESSMENT

When a child safety seat is present enter the occupant's number in the first row and complete the column below the occupant's number using the codes listed below. Complete a column for each child safety seat present.

Occupant Number						
1. Type of Child Safety Seat						
2. Child Safety Seat Orientation						
3. Child Safety Seat Harness Usage						
4. Child Safety Seat Shield Usage						
5. Child Safety Seat Tether Usage						
6. Child Safety Seat Make/Model	Specify Below for Each Child Safety Seat					

1. Type of Child Safety Seat

   (0) No child safety seat
   (1) Infant seat
   (2) Toddler seat
   (3) Convertible seat
   (4) Booster seat
   (7) Other type child safety seat (specify):

   _____

   (8) Unknown child safety seat type
   (9) Unknown if child safety seat used

2. Child Safety Seat Orientation

   (00) No child safety seat

   Designed for Rear Facing for This Age/Weight
   (01) Rear facing
   (02) Forward facing
   (08) Other orientation (specify):

   _____

   (09) Unknown orientation

   Designed for Forward Facing for This Age/Weight
   (11) Rear facing
   (12) Forward facing
   (18) Other orientation (specify):

   _____

   (19) Unknown orientation

   Unknown Design or Orientation For This Age/Weight, or Unknown Age/Weight
   (21) Rear facing
   (22) Forward facing
   (28) Other orientation (specify):

   _____

   (29) Unknown orientation

   (99) Unknown if child safety seat used

3. Child Safety Seat Harness Usage

4. Child Safety Seat Shield Usage

5. Child Safety Seat Tether Usage
   Note: Options Below Are Used for Variables 3-5.

   (00) No child safety seat

   Not Designed with Harness/Shield/Tether
   (01) After market harness/shield/tether added, not used
   (02) After market harness/shield/tether used
   (03) Child safety seat used, but no after market harness/shield/tether added
   (09) Unknown if harness/shield/tether added or used

   Designed With Harness/Shield/Tether
   (11) Harness/shield/tether not used
   (12) Harness/shield/tether used
   (19) Unknown if harness/shield/tether used

   Unknown If Designed With Harness/Shield/Tether
   (21) Harness/shield/tether not used
   (22) Harness/shield/tether used
   (29) Unknown if harness/shield/tether used

   (99) Unknown if child safety seat used

6. Child Safety Seat Make/Model
   (Specify make/model and occupant number)

   _____

   _____

   _____

   _____

HEAD RESTRAINTS/SEAT EVALUATION

NOTES: Encode the applicable data for **each seat position** in the vehicle. The attribute for these variables may be found at the bottom of the page. Head restraint type/damage and seat type/performance should be assessed during the vehicle inspection then coded on the Occupant Assessment Form.

		Left	Center	Right
FIRST	Head Restraint Type/Damage	3	0	3
	Seat Type	02	00	02
	Seat Performance	1	0	1
	Seat Orientation	1	0	1
SECOND	Head Restraint Type/Damage	3	0	3
	Seat Type	02	00	02
	Seat Performance	0	0	0
	Seat Orientation	0	0	0
THIRD	Head Restraint Type/Damage	0	0	0
	Seat Type	00	00	00
	Seat Performance	0	0	0
	Seat Orientation	0	0	0
OTHER	Head Restraint Type/Damage			
	Seat Type			
	Seat Performance			
	Seat Orientation			

Head Restraint Type/Damage by Occupant at This Occupant Position

(0) No head restraints
(1) Integral — no damage
(2) Integral — damaged during accident
(3) Adjustable — no damage
(4) Adjustable — damaged during accident
(5) Add-on — no damage
(6) Add-on — damaged during accident
(8) Other Specify): _____
(9) Unknown

Seat Type (this Occupant Position)

(00) Occupant not seated or no seat
(01) Bucket
(02) Bucket with folding back
(03) Bench
(04) Bench with separate back cushions
(05) Bench with folding back(s)
(06) Split bench with separate back cushions
(07) Split bench with folding back(s)
(08) Pedestal (i.e., column supported)
(09) Other seat type (specify): _____
(10) Box mounted seat (i.e., van type)
(99) Unknown

Seat Performance (this Occupant Position)

(0) Occupant not seated or no seat
(1) No seat performance failure(s)
(2) Seat adjusters failed
(3) Seat back folding locks or "seat back" failed specify: _____
(4) Seat tracks/anchors failed
(5) Deformed by impact of occupant
(6) Deformed by passenger compartment intrusion (specify): _____
(7) Combination of above (specify): _____
(8) Other (specify): _____
(9) Unknown

Seat Orientation (this Occupant Position)

(0) Occupant not seated or no seat
(1) Forward facing seat
(2) Rear facing seat
(3) Side facing seat (inward)
(4) Side facing seat (outward)
(8) Other (specify): _____
(9) Unknown

DESCRIBE ANY INDICATION OF ABNORMAL OCCUPANT POSTURE (I.E., UNUSUAL OCCUPANT CONTACT PATTERN)

EJECTION/ENTRAPMENT DATA

Complete the following if the researcher has any indication that an occupant was either ejected from or entrapped in the vehicle. Code the appropriate data on the Occupant Assessment Form.

EJECTION No [X] Yes [ ]

Describe indications of ejection and body parts involved in partial ejection(s):

Occupant Number						
Ejection						
(Note on Vehicle Interior Sketch) Ejection Area						
Ejection Medium						
Medium Status						

Ejection
(1) Complete ejection
(2) Partial ejection
(3) Ejection, Unknown degree
(9) Unknown

Ejection Area
(1) Windshield
(2) Left front
(3) Right front
(4) Left rear
(5) Right rear
(6) Rear
(7) Roof
(8) Other area (e.g., back of pickup, etc.) (specify): _____
(9) Unknown

Ejection Medium
(1) Door/hatch/tailgate
(2) Nonfixed roof structure
(3) Fixed glazing
(4) Nonfixed glazing (specify): _____
(5) Integral structure
(8) Other medium (specify): _____
(9) Unknown

Medium Status (Immediately Prior to Impact)
(1) Open
(2) Closed
(3) Integral structure
(9) Unknown

ENTRAPMENT No [X] Yes [ ]

Describe entrapment mechanism: _____

Component(s): _____

(Note in vehicle interior diagram)

U.S. Department of Transportation
National Highway Traffic Safety Administration

OCCUPANT ASSESSMENT FORM

Form Approved
O.M.B. No. 2127-0021

NATIONAL ACCIDENT SAMPLING SYSTEM
CRASHWORTHINESS DATA SYSTEM

1. Primary Sampling Unit Number: 06
2. Case Number - Stratum: 057 E
3. Vehicle Number: 01
4. Occupant Number: 01

OCCUPANT'S CHARACTERISTICS

5. Occupant's Age: 44
Code actual age at time of accident.
(00) Less than one year old (specify by month): _____
(97) 97 years and older
(99) Unknown

6. Occupant's Sex: 2
(1) Male
(2) Female
(9) Unknown

7. Occupant's Height: 168
Code actual height to the nearest centimeter.
(999) Unknown

66 inches X 2.54 = 168 centimeters

8. Occupant's Weight: 065
Code actual weight to the nearest kilogram.
(999)Unknown

145 pounds X .4536 = 065 kilograms

9. Occupant's Role: 1
(1) Driver
(2) Passenger
(9) Unknown

OCCUPANT'S SEATING

10. Occupant's Seat Position: 11
Front Seat
(11) Left side
(12) Middle
(13) Right side
(14) Other (specify): _____
(15) On or in the lap of another occupant

Second Seat
(21) Left side
(22) Middle
(23) Right side
(24) Other (specify): _____
(25) On or in the lap of another occupant

Third Seat
(31) Left side
(32) Middle
(33) Right side
(34) Other (specify): _____
(35) On or in the lap of another occupant

Fourth Seat
(41) Left side
(42) Middle
(43) Right side
(44) Other (specify): _____
(45) On or in the lap of another occupant

(97) In or on unenclosed area
(98) Other seat (specify): _____
(99) Unknown

11. Occupant's Posture: 0
(0) Normal posture

Abnormal posture
(1) Kneeling or standing on seat
(2) Lying on or across seat
(3) Kneeling, standing or sitting in front of seat
(4) Sitting sideways or turned to talk with another occupant or to look out a rear window
(5) Sitting on a console
(6) Lying back in a reclined seat position
(7) Bracing with feet or hands on a surface in front of seat
(8) Other abnormal posture (specify): _____
(9) Unknown

BEST AVAILABLE

This report is authorized by P.L. 89-563, Title 1, Section 106, 108, and 112. While you are not required to respond, your cooperation is needed to make the results of this data collection effort comprehensive, accurate, and timely.

EJECTION/ENTRAPMENT

12. Ejection
    (0) No ejection
    (1) Complete ejection
    (2) Partial ejection
    (3) Ejection, unknown degree
    (9) Unknown

13. Ejection Area
    (0) No ejection
    (1) Windshield
    (2) Left front
    (3) Right front
    (4) Left rear
    (5) Right rear
    (6) Rear
    (7) Roof
    (8) Other area (e.g., back of pickup, etc.) (specify):_____
    (9) Unknown

14. Ejection Medium
    (0) No ejection
    (1) Door/hatch/tailgate
    (2) Nonfixed roof structure
    (3) Fixed glazing
    (4) Nonfixed glazing (specify):
    _____
    (5) Integral structure
    (8) Other medium (specify):
    _____
    (9) Unknown

15. Medium Status (Immediately Prior To Impact)
    (0) No ejection
    (1) Open
    (2) Closed
    (3) Integral structure
    (9) Unknown

16. Entrapment
    (NOTE: Entrapped means that part of the person was in the vehicle and mechanically restrained; jammed doors and immobilizing injuries by themselves are not sufficient to constitute entrapment.)
    (0) Not entrapped
    (1) Entrapped
    (9) Unknown

RESTRAINT SYSTEM EVALUATION

17. Manual (Active) Belt System Availability 4
    (0) None available
    (1) Belt removed/destroyed
    (2) Shoulder belt
    (3) Lap belt
    (4) Lap and shoulder belt
    (5) Belt available—type unknown

    Integral Belt Partially Destroyed
    (6) Shoulder belt (lap belt destroyed/removed)
    (7) Lap belt (shoulder belt destroyed/removed)

    (8) Other belt (specify): _____

    (9) Unknown

18. Manual (Active) Belt System Use 00
    (00) None used, not available, or belt removed/destroyed
    (01) Inoperative (specify): _____

    (02) Shoulder belt
    (03) Lap belt
    (04) Lap and shoulder belt
    (05) Belt used—type unknown
    (08) Other belt used (specify): _____

    (12) Shoulder belt used with child safety seat
    (13) Lap belt used with child safety seat
    (14) Lap and shoulder belt used with child safety seat
    (15) Belt used with child safety seat—type unknown
    (18) Other belt used with child safety seat (specify): _____
    (99) Unknown if belt used

19. Proper Use of Manual (Active) Belts 0
    (0) None used or not available
    (1) Belt used properly
    (2) Belt used properly with child safety seat

    Belt Used Improperly
    (3) Shoulder belt worn under arm
    (4) Shoulder belt worn behind back or seat
    (5) Belt worn around more than one person
    (6) Lap belt worn on abdomen
    (7) Lap belt or lap and shoulder belt used improperly with child safety seat (specify): _____

    (8) Other improper use of manual belt system (specify): _____

    (9) Unknown

20. Manual (Active) Belt Failure Modes During Accident 0
    (0) No manual belt used
    (1) No manual belt failure(s)
    (2) Torn webbing (stretched webbing not included)
    (3) Broken buckle or latchplate
    (4) Upper anchorage separated
    (5) Other anchorage separated (specify): _____

    (6) Broken retractor
    (7) Combination of above (specify): _____

    (8) Other manual belt failure (specify): _____

    (9) Unknown

21. Air Bag System Availability/Function 0
    (0) Not equipped/not available
    (1) Air bag

    Non-functional
    (2) Air bag disconnected (specify): _____

    (3) Air bag not reinstalled
    (9) Unknown

22. Air Bag System Deployment 0
    (0) Not equipped/not available
    (1) Air bag deployed during accident (as a result of impact)
    (2) Air bag deployed inadvertently just prior to accident
    (3) Air bag deployed, accident sequence undetermined
    (4) Nondeployed
    (5) Unknown if deployed
    (6) Air bag deployed as a result of a noncollision event during accident sequence (e.g., fire, explosion, electrical)
    (9) Unknown

23. Are There Indications of Air Bag System Failure? 0
    (0) Not equipped/not available
    (1) No
    (2) Yes (specify): _____

    (9) Unknown

    Note: See Variables 44 through 48 (Page 5) for Information on Automatic Belts

24. Police Reported Restraint Use 4
    (0) None used
    (1) Police did not indicate restraint use
    (2) Shoulder belt
    (3) Lap belt
    (4) Lap and shoulder belt
    (5) Belt used, type not specified
    (6) Child safety seat
    (7) Other or automatic restraint (specify): _____

    (8) Restrained, type unknown
    (9) Police indicated "unknown"

BEST AVAILABLE

HEAD RESTRAINT AND SEAT EVALUATION

25. Head Restraint Type/Damage by Occupant at This Occupant Position 15
    (0) No head restraints
    (1) Integral—no damage
    (2) Integral—damaged during accident
    (3) Adjustable—no damage
    (4) Adjustable—damaged during accident
    (5) Add-on—no damage
    (6) Add-on—damaged during accident
    (8) Other (specify): _____
    (9) Unknown

26. Seat Type (this Occupant Position) 02
    (00) Occupant not seated or no seat
    (01) Bucket
    (02) Bucket with folding back
    (03) Bench
    (04) Bench with separate back cushions
    (05) Bench with folding back(s)
    (06) Split bench with separate back cushions
    (07) Split bench with folding back(s)
    (08) Pedestal (i.e., column supported)
    (09) Other seat type (specify): _____
    (10) Box mounted seat (i.e., van type)
    (99) Unknown

27. Seat Performance (this Occupant Position) 1
    (0) Occupant not seated or no seat
    (1) No seat performance failure(s)
    (2) Seat adjusters failed
    (3) Seat back folding locks or "seat back" failed (specify): _____
    (4) Seat track/anchors failed
    (5) Deformed by impact of occupant
    (6) Deformed by passenger compartment intrusion (specify): _____
    (7) Combination of above (specify): _____
    (8) Other (specify): _____
    (9) Unknown

CHILD SAFETY SEAT

28. Child Safety Seat Make/Model 000
(000) No child safety seat
Applicable codes are found in your NASS CDS Data Collection, Coding and Editing
(950) Built-in child safety seat
(997) Other make/model (specify):

_____

(998) Unknown make/model
(999) Unknown if child safety seat used

29. Type of Child Safety Seat 0
(0) No child safety seat
(1) Infant seat
(2) Toddler seat
(3) Convertible seat
(4) Booster seat
(7) Other type child safety seat (specify):

_____

(8) Unknown child safety seat type
(9) Unknown if child safety seat used

30. Child Safety Seat Orientation 00
(00) No child safety seat

Designed for Rear Facing for This Age/Weight
(01) Rear facing
(02) Forward facing
(08) Other orientation (specify):

_____

(09) Unknown orientation

Designed For Forward Facing for This Age/Weight
(11) Rear facing
(12) Forward facing
(18) Other orientation (specify):

_____

(19) Unknown orientation

Unknown Design or Orientation For This Age/Weight, or Unknown Age/Weight
(21) Rear facing
(22) Forward facing
(28) Other orientation (specify):

_____

(29) Unknown orientation

(99) Unknown if child safety seat used

31. Child Safety Seat Harness Usage 00

32. Child Safety Seat Shield Usage 00

33. Child Safety Seat Tether Usage 00

Note: Options below applicable to Variables OA31-OA33.
(00) No child safety seat

Not Designed With Harness/Shield/Tether
(01) After market harness/shield/tether added, not used
(02) After market harness/shield/tether used
(03) Child safety seat used, but no after market harness/shield/tether added
(09) Unknown if harness/shield/tether added or used

Designed With Harness/Shield/Tether
(11) Harness/shield/tether not used
(12) Harness/shield/tether used
(19) Unknown if harness/shield/tether used

Unknown If Designed With Harness/Shield/Tether
(21) Harness/shield/tether not used
(22) Harness/shield/tether used
(29) Unknown if harness/shield/tether used

(99) Unknown if child safety seat used

INJURY CONSEQUENCES

34. Injury Severity (Police Rating) 2

(0) O - No injury
(1) C - Possible injury
(2) B - Nonincapacitating injury
(3) A - Incapacitating injury
(4) K - Killed
(5) U - Injury, severity unknown
(6) Died prior to accident
(9) Unknown

35. Treatment - Mortality 4

(0) No treatment
(1) Fatal
(2) Fatal - ruled disease (specify):

_____

Nonfatal
(3) Hospitalization
(4) Transported and released
(5) Treatment at scene - nontransported
(6) Treatment later
(8) Treatment - other (specify):

_____

(9) Unknown

36. Type Of Medical Facility (for Initial Treatment) 2

(0) Not treated at a medical facility
(1) Trauma center
(2) Hospital
(3) Medical clinic
(4) Physician's office
(5) Treatment later at medical facility
(8) Other (specify):

_____

(9) Unknown

37. Hospital Stay 00

(00) Not Hospitalized
_____Code the number of days (up through 60) that the occupant stayed in hospital.
(61) 61 days or more
(99) Unknown

38. Working Days Lost 00

_____Code the number of days (up through 60) that the occupant lost from work due to the accident
(00) No working days lost
(61) 61 days or more
(62) Fatally injured
(97) Not working prior to accident
(99) Unknown

STOP - GO TO VARIABLE 44 ON PAGE 7

VARIABLES 39 THROUGH 43 ARE COMPLETED BY THE ZONE CENTER

39. Time to Death 00

_____Code number of hours from time of accident to time of death up through 24 hours. If time of death is greater than 24 hours, code number of days. (Note: 1 day = 31, 2 days = 32, ... n days = 30 +n up through 30 days = 60)
(00) Not fatal
(96) Fatal - ruled disease
(99) Unknown

40. 1st Medically Reported Cause of Death 00

41. 2nd Medically Reported Cause of Death 00

42. 3rd Medically Reported Cause of Death 00

_____Code the Occupant Injury from line number(s) for the medically reported injury(s) which reportedly contributed to this occupant's death
(00) Not fatal or no additional causes
(96) Mode of death given but specific injuries are not linked to cause of death. (specify):

_____

(97) Other result (includes fatal ruled disease) (specify):

_____

(99) Unknown

43. Number of Recorded Injuries for This Occupant 02

_____Code the actual number of injuries recorded for this occupant.
(00) No recorded injuries
(97) Injured, details unknown
(99) Unknown if injured

AUTOMATIC BELT SYSTEM

44. Automatic (Passive) Belt System Availability/ Function
(0) Not equipped/not available
(1) 2 point automatic belts
(2) 3 point automatic belts
(3) Automatic belts - type unknown

Non-functional
(4) Automatic belts destroyed or rendered inoperative
(9) Unknown

0

45. Automatic (Passive) Belt System Use
(0) Not equipped/not available/destroyed or rendered inoperative
(1) Automatic belt in use
(2) Automatic belt not in use (manually disconnected, motorized track inoperative) (specify):

(3) Automatic belt use unknown
(9) Unknown

0

46. Automatic (Passive) Belt System Type
(0) Not equipped/not available
(1) Non-motorized system
(2) Motorized system
(9) Unknown

0

47. Proper Use of Automatic (Passive) Belt System
(0) Not equipped/not available/not used
(1) Automatic belt used properly
(2) Automatic belt used properly with child safety seat

Automatic Belt Used Improperly
(3) Automatic shoulder belt worn under arm
(4) Automatic shoulder belt worn behind back
(5) Automatic belt worn around more than one person
(6) Lap portion of automatic belt worn on abdomen
(7) Automatic lap and shoulder belt or automatic shoulder belt used improperly with child safety seat (specify):

(8) Other improper use of automatic belt system (specify):
(9) Unknown

0

48. Automatic (Passive) Belt Failure Modes During Accident
(0) Not equipped/not available/not in use
(1) No automatic belt failure(s)
(2) Torn webbing (stretched webbing not included)
(3) Broken buckle or latchplate
(4) Upper anchorage separated
(5) Other anchorage separated (specify):

(6) Broken retractor
(7) Combination of above (specify):
(8) Other automatic belt failure (specify):

(9) Unknown

0

49. Seat Orientation (this Occupant Position)
(0) Occupant not seated or no seat
(1) Forward facing seat
(2) Rear facing seat
(3) Side facing seat (inward)
(4) Side facing seat (outward)
(8) Other (specify):

(9) Unknown

1

Check the Primary Source Used In Determining Belt Use.

[ ] Not equipped/not available/destroyed or rendered inoperative
[ ] Vehicle inspection
[ ] Official injury data
[ ] Driver/occupant interview
[ ] Other (specify):

[ ] Unknown if belt used

ARE ALL APPLICABLE MEDICAL RECORDS INCLUDED WITH INITIAL SUBMISSION? NO [ ] YES [ ]

UPDATE CANDIDATE? NO [ ] YES [ ]

STOP - VARIABLES 50 THROUGH 53 ARE COMPLETED BY THE ZONE CENTER

TRAUMA DATA

50. Glasgow Coma Scale (GCS) Score (at Medical Facility) 02
    (00) Not injured
    (01) Injured - not treated at medical facility
    (02) No GCS Score at medical facility
    (03-15) Code the actual value of the initial GCS Score recorded at medical facility.
    (97) Injured, details unknown
    (99) Unknown if injured

51. Was the Occupant Given Blood? 1
    (1) No - blood not given
    (2) Yes - blood given
    (specify units):_____
    (9) Unknown if blood given

52. Arterial Blood Gases (ABG) - HCO_3 01
    (00) Not injured
    (01) Injured, ABGs not measured or reported
    (02-50) Code the actual value of the HCO_3
    (96) ABGs reported , HCO_3 unknown
    (97) Injured, details unknown
    (99) Unknown if injured

BELT USE DETERMINATION

53. Primary Source of Belt Use Determination 1
    (0) Not equipped/not available/destroyed or rendered inoperative
    (1) Vehicle inspection
    (2) Official injury data
    (3) Driver/occupant interview
    (8) Other (specify):_____
    (9) Unknown if belt used

U.S. Department of Transportation

National Highway Traffic Safety Administration

OCCUPANT INJURY FORM

Form Approved
O.M.B. No. 2127-0021

NATIONAL ACCIDENT SAMPLING SYSTEM
CRASHWORTHINESS DATA SYSTEM

1. Primary Sampling Unit Number	06	3. Vehicle Number	01
2. Case Number - Stratum	057E	4. Occupant Number	01

INJURY DATA

Record below the actual injuries sustained by this occupant that were identified from the official and unofficial data sources. Remember not to double count an injury just because it was identified from two different sources. If greater than ten injuries have been documented, encode the balance on the Occupant Injury Supplement.

	Source of Injury Data	A.I.S. - 90 Body Region	Type of Anatomic Structure	Specific Anatomic Structure	Level of Injury	A.I.S. Severity	Aspect	Injury Source	Injury Source Confidence Level	Direct/ Indirect Injury	Occupant Area Intrusion Number
1st	5. 3	6. 1	7. 9	8. 04	9. 02	10. 1	11. 2	12. 50	13. 2	14. 1	15. 00
2nd	16. 3	17. 7	18. 9	19. 04	20. 02	21. 1	22. 2	23. 52	24. 3	25. 1	26. 02
3rd	27.	28.	29.	30.	31.	32.	33.	34.	35.	36.	37.
4th	38.	39.	40.	41.	42.	43.	44.	45.	46.	47.	48.
5th	49.	50.	51.	52.	53.	54.	55.	56.	57.	58.	59.
6th	60.	61.	62.	63.	64.	65.	66.	67.	68.	69.	70.
7th	71.	72.	73.	74.	75.	76.	77.	78.	79.	80.	81.
8th	82.	83.	84.	85.	86.	87.	88.	89.	90.	91.	92.
9th	93.	94.	95.	96.	97.	98.	99.	100.	101.	102.	103.
10th	104.	105.	106.	107.	108.	109.	110.	111.	112.	113.	114.

① temporal contusion

② upper arm contusion

This report is authorized by P.L. 89-563, Title 1, Section 106, 108, and 112. While you are not required to respond, your cooperation is needed to make the results of this data collection effort comprehensive, accurate, and timely.

OCCUPANT INJURY DATA

	Source of Injury Data	A.I.S. - 90 Body Region	Type of Anatomic Structure	Specific Anatomic Structure	Level of Injury	A.I.S. Severity	Aspect	Injury Source	Injury Source Confidence Level	Direct/ Indirect Injury	Occupant Area Intrusion Number
11th											
12th											
13th											
14th											
15th											
16th											
17th											
18th											
19th											
20th											
21st											
22nd											
23rd											
24th											
25th											

OFFICIAL INJURY DATA – SOFT TISSUE INJURIES

Indicate the Location, Specific Anatomic Structure, Detail (size, depth, fracture type, head injury clinical signs and neurological deficits), and Source of all injuries indicated by official sources (or from PAR or other unofficial sources if medical records and interviewee data are unavailable.)

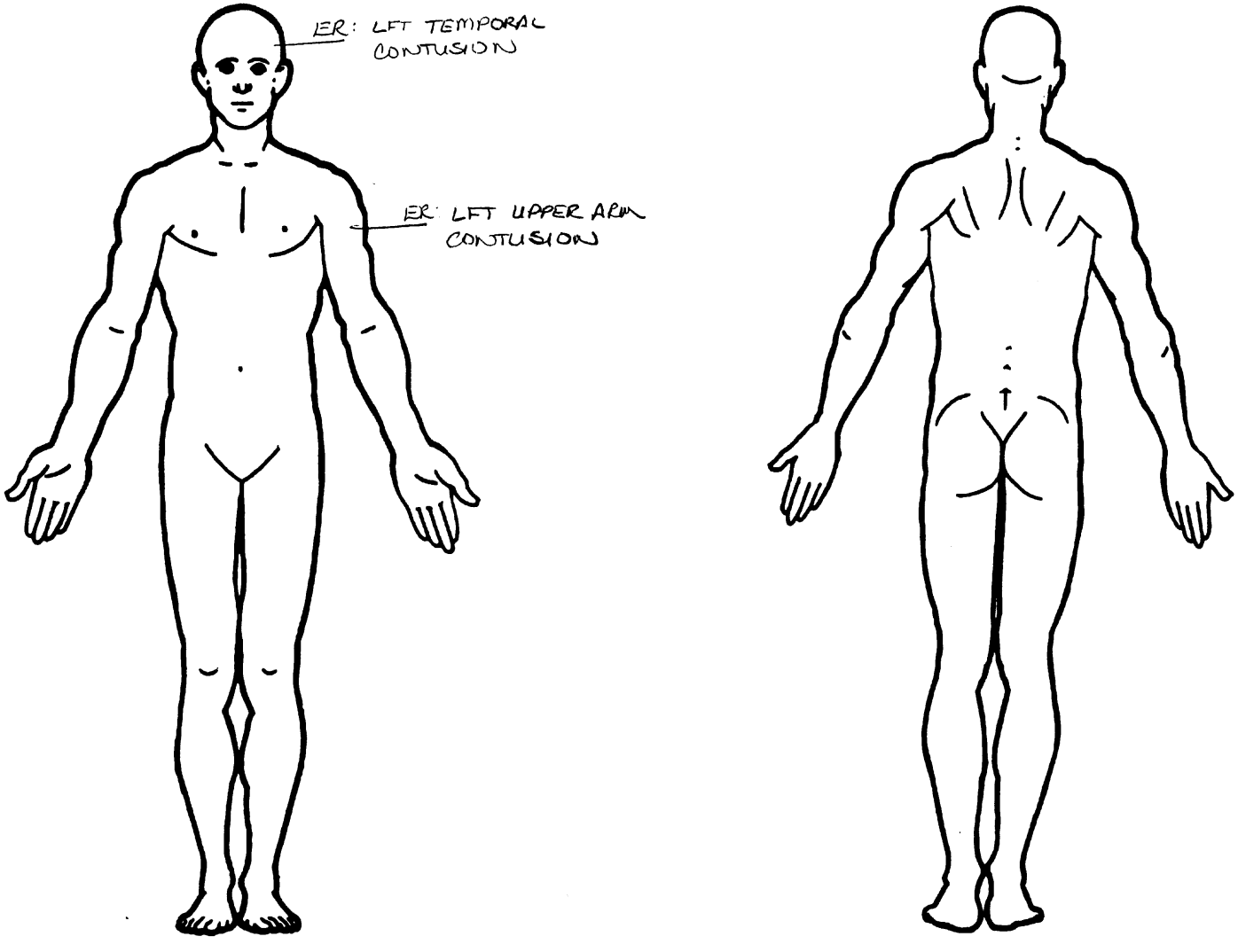

SOURCE OF INJURY DATA

OFFICIAL
(1) Autopsy records with or without hospital/ medical records
(2) Hospital/medical records other than emergency room (e.g., discharge summary)
(3) Emergency room records only (including associated X-rays or other lab reports)
(4) Private physician, walk-in or emergency clinic

UNOFFICIAL
(5) Lay coroner report
(6) E.M.S. personnel
(7) Interviewee
(8) Other source (specify):

(9) Police

INJURY SOURCE

FRONT
(01) Windshield
(02) Mirror
(03) Sunvisor
(04) Steering wheel rim
(05) Steering wheel hub/spoke
(06) Steering wheel (combination of codes 04 and 05)
(07) Steering column, transmission selector lever, other attachment
(08) Add on equipment (e.g., CB, tape deck, air conditioner)
(09) Left instrument panel and below
(10) Center instrument panel and below
(11) Right instrument panel and below
(12) Glove compartment door
(13) Knee bolster
(14) Windshield including one or more of the following: front header, A (A1/A2)-pillar, instrument panel, mirror, or steering assembly (driver side only)
(15) Windshield including one or more of the following: front header, A (A1/A2)-pillar, instrument panel, or mirror (passenger side only)
(16) Driver side air bag compartment cover
(17) Passenger side air bag compartment cover
(18) Windshield reinforced by exterior object (specify):
(19) Other front object (specify):

LEFT SIDE
(20) Left side interior surface, excluding hardware or armrests
(21) Left side hardware or armrest
(22) Left A (A1/A2)-pillar
(23) Left B-pillar
(24) Other left pillar (specify):

(25) Left side window glass or frame
(26) Left side window glass including one or more of the following: frame, window sill, A (A1/A2)-pillar, B-pillar, or roof side rail.
(27) Other left side object (specify):

(28) Left side window sill

RIGHT SIDE
(30) Right side interior surface, excluding hardware or armrests
(31) Right side hardware or armrest
(32) Right A (A1/A2)-pillar
(33) Right B-pillar
(34) Other right pillar (specify):

(35) Right side window glass or frame
(36) Right side window glass including one or more of the following: frame, window sill, A (A1/A2)-pillar, B-pillar, or roof side rail.
(37) Other right side object (specify):

(38) Right side window sill

INTERIOR
(40) Seat, back support
(41) Belt restraint webbing/buckle
(42) Belt restraint B-pillar or door frame attachment point
(43) Other restraint system component (specify):
(44) Head restraint system
(45) Air bag (use codes "16" and "17" for injuries sustained from air bag compartment covers)
(46) Other occupants (specify):

(47) Interior loose objects
(48) Child safety seat (specify):

(49) Other interior object (specify):

ROOF
(50) Front header
(51) Rear header
(52) Roof left side rail
(53) Roof right side rail
(54) Roof or convertible top

FLOOR
(56) Floor (including toe pan)
(57) Floor or console mounted transmission lever, including console
(58) Parking brake handle
(59) Foot controls including parking brake

REAR
(60) Backlight (rear window)
(61) Backlight storage rack, door, etc.
(62) Other rear object (specify):

EXTERIOR of OCCUPANT'S VEHICLE
(65) Hood
(66) Outside hardware (e.g., outside mirror, antenna)
(67) Other exterior surface or tires (specify):
(68) Unknown exterior objects

EXTERIOR OF OTHER MOTOR VEHICLE
(70) Front bumper
(71) Hood edge
(72) Other front of vehicle (specify):

(73) Hood
(74) Hood ornament
(75) Windshield, roof rail, A-pillar
(76) Side surface
(77) Side mirrors
(78) Other side protrusions (specify)

(79) Rear surface
(80) Undercarriage
(81) Tires and wheels
(82) Other exterior of other motor vehicle (specify):

(83) Unknown exterior of other motor vehicle

OTHER VEHICLE OR OBJECT IN THE ENVIRONMENT
(84) Ground
(85) Other vehicle or object (specify)

(86) Unknown vehicle or object

NONCONTACT INJURY
(90) Fire in vehicle
(91) Flying glass
(92) Other noncontact injury source (specify):
(93) Air bag exhaust gases
(97) Injured, unknown source

INJURY SOURCE CONFIDENCE LEVEL

(1) Certain
(2) Probable
(3) Possible
(9) Unknown

DIRECT/INDIRECT INJURY

(1) Direct contact injury
(2) Indirect contact injury
(3) Noncontact injury
(7) Injured, unknown source

OCCUPANT INJURY CLASSIFICATION

Body Region

(1) Head
(2) Face
(3) Neck
(4) Thorax
(5) Abdomen
(6) Spine
(7) Upper Extremity
(8) Lower Extremity
(9) Unspecified

Type of Anatomic Structure

(1) Whole Area
(2) Vessels
(3) Nerves
(4) Organs (includes muscles/ ligaments)
(5) Skeletal (includes joints)
(6) Head - LOC
(9) Skin

Specific Anatomic Structure

Whole Area
(02) Skin - Abrasion
(04) Skin - Contusion
(06) Skin - Laceration
(08) Skin - Avulsion
(10) Amputation
(20) Burn
(30) Crush
(40) Degloving
(50) Injury - NFS
(90) Trauma, other than mechanical

Head - LOC
(02) Length of LOC
(04, 06, 08) Level of Consciousness
(10) Concussion

Spine
(02) Cervical
(04) Thoracic
(06) Lumbar

Vessels, Nerves, Organs, Bones, Joints are assigned consecutive two digit numbers beginning with 02

Level of Injury

Specific injuries are assigned consecutive two-digit numbers beginning with 02.

To the extent possible, within the organizational framework of the AIS, 00 is assigned to an injury NFS as to severity or where only one injury is given in the dictionary for that anatomic structure. 99 is assigned to any injury NFS as to lesion or severity.

Abbreviated Injury Scale

(1) Minor injury
(2) Moderate injury
(3) Serious injury
(4) Severe injury
(5) Critical injury
(6) Maximum (untreatable)
(7) Injured, unknown severity

Aspect

(1) Right
(2) Left
(3) Bilateral
(4) Central
(5) Anterior
(6) Posterior
(7) Superior
(8) Inferior
(9) Unknown
(0) Whole region

ER:

OFFICIAL INJURY DATA — SKELETAL INJURIES

Restrained?

__ No

__ Yes

Blood Alcohol Level (mg/dl)

BAL = ____

Glasgow Coma Scale Score

GCSS = ____

Units of Blood Given

Units = ____

Arterial Blood Gases

pH = __.__

PO_2 = ____

PCO_2 ____

HCO_3 ____

NOT RECORDED

Indicate the Location, Specific Anatomic Structure, Detail (size, depth, fracture type, head injury clinical signs and neurological deficits), and Source of all injuries indicated by official sources (or from PAR or other unofficial sources if medical records and interviewee data are unavailable.)

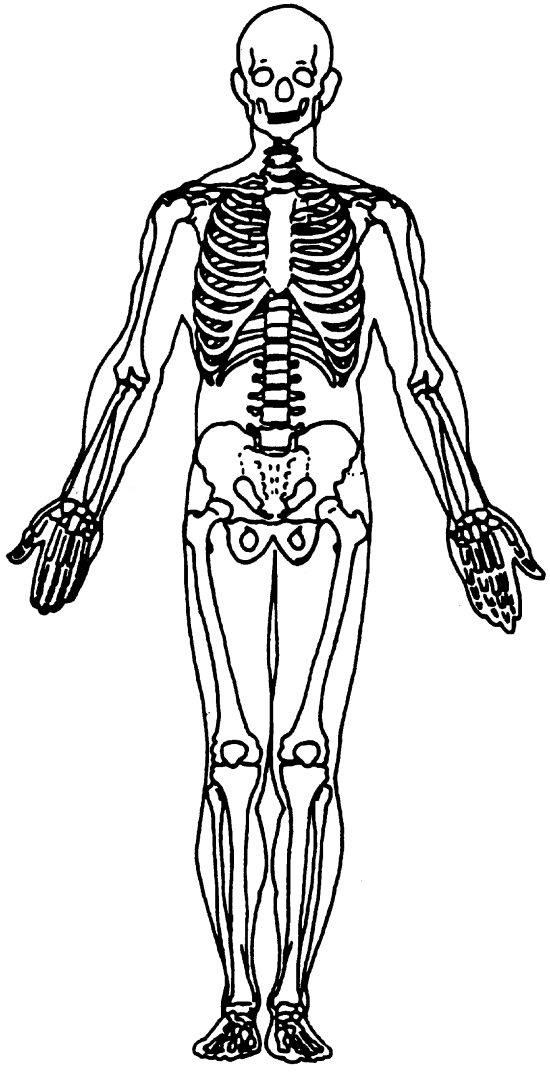

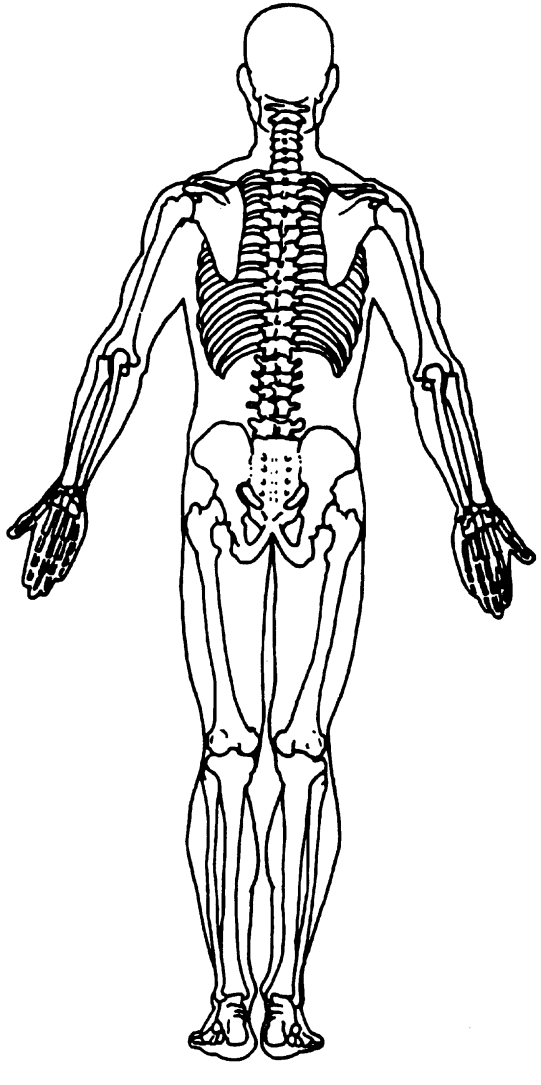

OFFICIAL INJURY DATA — INTERNAL INJURIES

Indicate the Location, Specific Anatomic Structure, Detail (size, depth, fracture type, head injury clinical signs and neurological deficits), and Source of all injuries indicated by official sources (or from PAR or other unofficial sources if medical records and interviewee data are unavailable.)

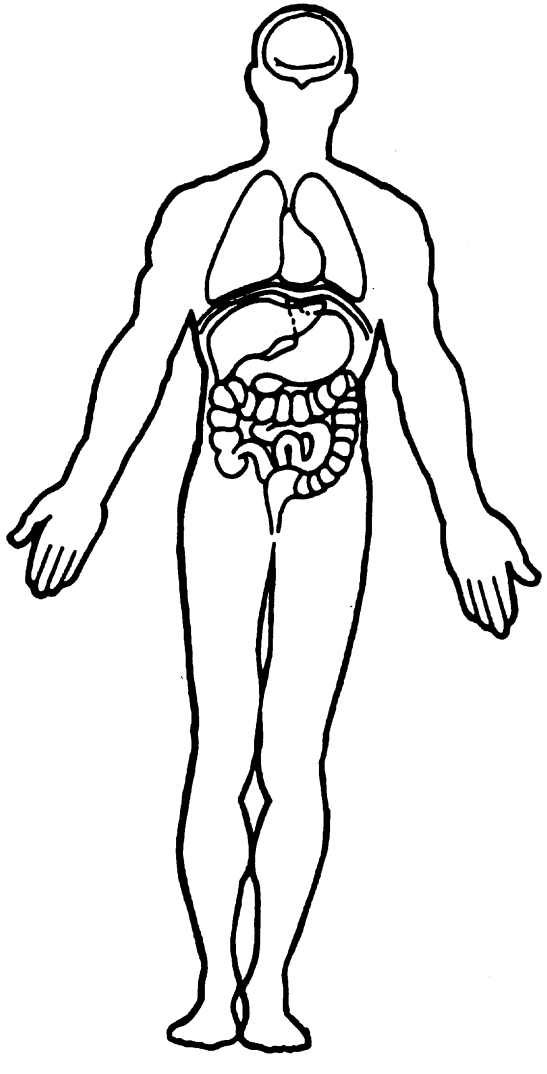

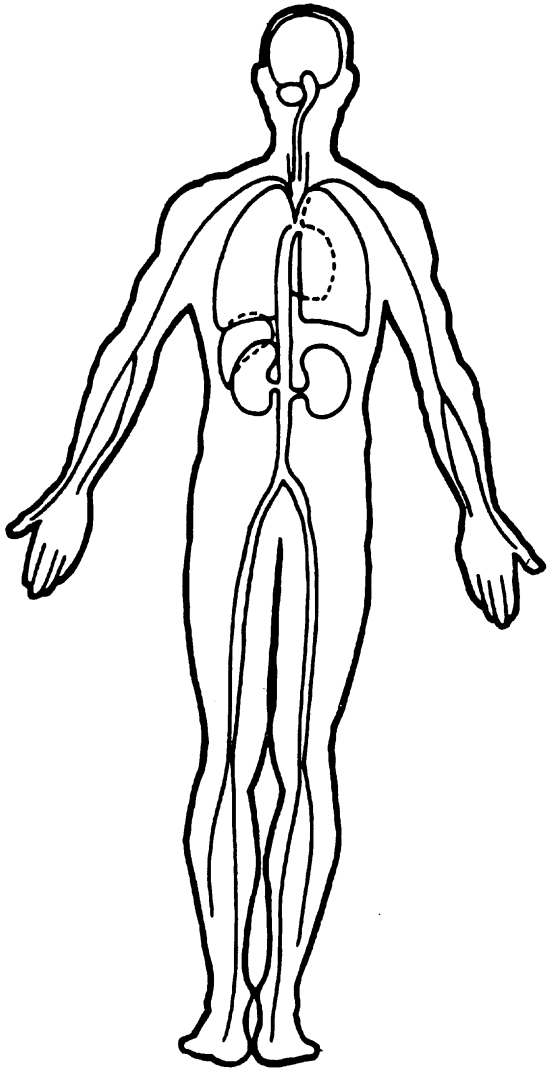

U.S. Department of Transportation
National Highway Traffic Safety Administration

OCCUPANT ASSESSMENT FORM

Form Approved
O.M.B. No. 2127-0021

NATIONAL ACCIDENT SAMPLING SYSTEM
CRASHWORTHINESS DATA SYSTEM

1. Primary Sampling Unit Number: 06
2. Case Number - Stratum: 057E
3. Vehicle Number: 01
4. Occupant Number: 02

OCCUPANT'S CHARACTERISTICS

5. Occupant's Age: 02
Code actual age at time of accident.
(00) Less than one year old (specify by month): _____
(97) 97 years and older
(99) Unknown

6. Occupant's Sex: 1
(1) Male
(2) Female
(9) Unknown

7. Occupant's Height: 097
Code actual height to the nearest centimeter.
(999) Unknown

38 inches X 2.54 = 965 centimeters

8. Occupant's Weight: 018
Code actual weight to the nearest kilogram.
(999)Unknown

040 pounds X .4536 = 181 kilograms

9. Occupant's Role: 2
(1) Driver
(2) Passenger
(9) Unknown

OCCUPANT'S SEATING

10. Occupant's Seat Position: 13
Front Seat
(11) Left side
(12) Middle
(13) Right side
(14) Other (specify): _____
(15) On or in the lap of another occupant

Second Seat
(21) Left side
(22) Middle
(23) Right side
(24) Other (specify): _____
(25) On or in the lap of another occupant

Third Seat
(31) Left side
(32) Middle
(33) Right side
(34) Other (specify): _____
(35) On or in the lap of another occupant

Fourth Seat
(41) Left side
(42) Middle
(43) Right side
(44) Other (specify): _____
(45) On or in the lap of another occupant

(97) In or on unenclosed area
(98) Other seat (specify): _____
(99) Unknown

11. Occupant's Posture: 0
(0) Normal posture

Abnormal posture
(1) Kneeling or standing on seat
(2) Lying on or across seat
(3) Kneeling, standing or sitting in front of seat
(4) Sitting sideways or turned to talk with another occupant or to look out a rear window
(5) Sitting on a console
(6) Lying back in a reclined seat position
(7) Bracing with feet or hands on a surface in front of seat
(8) Other abnormal posture (specify): _____
(9) Unknown

This report is authorized by P.L. 89-563, Title 1, Section 106, 108, and 112. While you are not required to respond, your cooperation is needed to make the results of this data collection effort comprehensive, accurate, and timely.

EJECTION/ENTRAPMENT

12. Ejection [0]
    (0) No ejection
    (1) Complete ejection
    (2) Partial ejection
    (3) Ejection, unknown degree
    (9) Unknown

13. Ejection Area [0]
    (0) No ejection
    (1) Windshield
    (2) Left front
    (3) Right front
    (4) Left rear
    (5) Right rear
    (6) Rear
    (7) Roof
    (8) Other area (e.g., back of pickup, etc.) (specify):_____
    (9) Unknown

14. Ejection Medium [0]
    (0) No ejection
    (1) Door/hatch/tailgate
    (2) Nonfixed roof structure
    (3) Fixed glazing
    (4) Nonfixed glazing (specify):
    _____
    (5) Integral structure
    (8) Other medium (specify):
    _____
    (9) Unknown

15. Medium Status (Immediately Prior To Impact) [0]
    (0) No ejection
    (1) Open
    (2) Closed
    (3) Integral structure
    (9) Unknown

16. Entrapment [0]
    (NOTE: Entrapped means that part of the person was in the vehicle and mechanically restrained; jammed doors and immobilizing injuries by themselves are not sufficient to constitute entrapment.)
    (0) Not entrapped
    (1) Entrapped
    (9) Unknown

RESTRAINT SYSTEM EVALUATION

17. Manual (Active) Belt System Availability — 4
    (0) None available
    (1) Belt removed/destroyed
    (2) Shoulder belt
    (3) Lap belt
    (4) Lap and shoulder belt
    (5) Belt available—type unknown

    Integral Belt Partially Destroyed
    (6) Shoulder belt (lap belt destroyed/removed)
    (7) Lap belt (shoulder belt destroyed/removed)

    (8) Other belt (specify): _____

    (9) Unknown

18. Manual (Active) Belt System Use — 04
    (00) None used, not available, or belt removed/destroyed
    (01) Inoperative (specify): _____

    (02) Shoulder belt
    (03) Lap belt
    (04) Lap and shoulder belt
    (05) Belt used—type unknown
    (08) Other belt used (specify): _____

    (12) Shoulder belt used with child safety seat
    (13) Lap belt used with child safety seat
    (14) Lap and shoulder belt used with child safety seat
    (15) Belt used with child safety seat—type unknown
    (18) Other belt used with child safety seat (specify): _____
    (99) Unknown if belt used

19. Proper Use of Manual (Active) Belts — 6
    (0) None used or not available
    (1) Belt used properly
    (2) Belt used properly with child safety seat

    Belt Used Improperly
    (3) Shoulder belt worn under arm
    (4) Shoulder belt worn behind back or seat
    (5) Belt worn around more than one person
    (6) Lap belt worn on abdomen
    (7) Lap belt or lap and shoulder belt used improperly with child safety seat (specify): _____

    (8) Other improper use of manual belt system (specify): _____

    (9) Unknown

20. Manual (Active) Belt Failure Modes During Accident — 1
    (0) No manual belt used
    (1) No manual belt failure(s)
    (2) Torn webbing (stretched webbing not included)
    (3) Broken buckle or latchplate
    (4) Upper anchorage separated
    (5) Other anchorage separated (specify): _____

    (6) Broken retractor
    (7) Combination of above (specify): _____

    (8) Other manual belt failure (specify): _____

    (9) Unknown

21. Air Bag System Availability/Function — 0
    (0) Not equipped/not available
    (1) Air bag

    Non-functional
    (2) Air bag disconnected (specify): _____

    (3) Air bag not reinstalled
    (9) Unknown

22. Air Bag System Deployment — 0
    (0) Not equipped/not available
    (1) Air bag deployed during accident (as a result of impact)
    (2) Air bag deployed inadvertently just prior to accident
    (3) Air bag deployed, accident sequence undetermined
    (4) Nondeployed
    (5) Unknown if deployed
    (6) Air bag deployed as a result of a noncollision event during accident sequence (e.g., fire, explosion, electrical)
    (9) Unknown

23. Are There Indications of Air Bag System Failure? — 0
    (0) Not equipped/not available
    (1) No
    (2) Yes (specify): _____

    (9) Unknown

Note: See Variables 44 through 48 (Page 5) for Information on Automatic Belts

24. Police Reported Restraint Use — 4
    (0) None used
    (1) Police did not indicate restraint use
    (2) Shoulder belt
    (3) Lap belt
    (4) Lap and shoulder belt
    (5) Belt used, type not specified
    (6) Child safety seat
    (7) Other or automatic restraint (specify): _____

    (8) Restrained, type unknown
    (9) Police indicated "unknown"

HEAD RESTRAINT AND SEAT EVALUATION

25. Head Restraint Type/Damage by Occupant at This Occupant Position: 3
    (0) No head restraints
    (1) Integral—no damage
    (2) Integral—damaged during accident
    (3) Adjustable—no damage
    (4) Adjustable—damaged during accident
    (5) Add-on—no damage
    (6) Add-on—damaged during accident
    (8) Other (specify): _____
    (9) Unknown

26. Seat Type (this Occupant Position): 02
    (00) Occupant not seated or no seat
    (01) Bucket
    (02) Bucket with folding back
    (03) Bench
    (04) Bench with separate back cushions
    (05) Bench with folding back(s)
    (06) Split bench with separate back cushions
    (07) Split bench with folding back(s)
    (08) Pedestal (i.e., column supported)
    (09) Other seat type (specify): _____
    (10) Box mounted seat (i.e., van type)
    (99) Unknown

27. Seat Performance (this Occupant Position): 1
    (0) Occupant not seated or no seat
    (1) No seat performance failure(s)
    (2) Seat adjusters failed
    (3) Seat back folding locks or "seat back" failed (specify): _____
    (4) Seat track/anchors failed
    (5) Deformed by impact of occupant
    (6) Deformed by passenger compartment intrusion (specify): _____
    (7) Combination of above (specify): _____
    (8) Other (specify): _____
    (9) Unknown

CHILD SAFETY SEAT

28. Child Safety Seat Make/Model [000]
(000) No child safety seat
Applicable codes are found in your NASS CDS Data Collection, Coding and Editing
(950) Built-in child safety seat
(997) Other make/model (specify): _____
(998) Unknown make/model
(999) Unknown if child safety seat used

29. Type of Child Safety Seat [0]
(0) No child safety seat
(1) Infant seat
(2) Toddler seat
(3) Convertible seat
(4) Booster seat
(7) Other type child safety seat (specify): _____
(8) Unknown child safety seat type
(9) Unknown if child safety seat used

30. Child Safety Seat Orientation [00]
(00) No child safety seat

Designed for Rear Facing for This Age/Weight
(01) Rear facing
(02) Forward facing
(08) Other orientation (specify): _____
(09) Unknown orientation

Designed For Forward Facing for This Age/Weight
(11) Rear facing
(12) Forward facing
(18) Other orientation (specify): _____
(19) Unknown orientation

Unknown Design or Orientation For This Age/Weight, or Unknown Age/Weight
(21) Rear facing
(22) Forward facing
(28) Other orientation (specify): _____
(29) Unknown orientation

(99) Unknown if child safety seat used

31. Child Safety Seat Harness Usage [00]

32. Child Safety Seat Shield Usage [00]

33. Child Safety Seat Tether Usage [00]

Note: Options below applicable to Variables OA31-OA33.
(00) No child safety seat

Not Designed With Harness/Shield/Tether
(01) After market harness/shield/tether added, not used
(02) After market harness/shield/tether used
(03) Child safety seat used, but no after market harness/shield/tether added
(09) Unknown if harness/shield/tether added or used

Designed With Harness/Shield/Tether
(11) Harness/shield/tether not used
(12) Harness/shield/tether used
(19) Unknown if harness/shield/tether used

Unknown If Designed With Harness/Shield/Tether
(21) Harness/shield/tether not used
(22) Harness/shield/tether used
(29) Unknown if harness/shield/tether used

(99) Unknown if child safety seat used

BEST AVAILABLE

INJURY CONSEQUENCES

34. Injury Severity (Police Rating) 2

(0) O - No injury
(1) C - Possible injury
(2) B - Nonincapacitating injury
(3) A - Incapacitating injury
(4) K - Killed
(5) U - Injury, severity unknown
(6) Died prior to accident
(9) Unknown

35. Treatment - Mortality 4

(0) No treatment
(1) Fatal
(2) Fatal - ruled disease (specify):

_____

Nonfatal
(3) Hospitalization
(4) Transported and released
(5) Treatment at scene - nontransported
(6) Treatment later
(8) Treatment - other (specify):

_____
(9) Unknown

36. Type Of Medical Facility (for Initial Treatment) 2

(0) Not treated at a medical facility
(1) Trauma center
(2) Hospital
(3) Medical clinic
(4) Physician's office
(5) Treatment later at medical facility
(8) Other (specify):

_____
(9) Unknown

37. Hospital Stay 00

(00) Not Hospitalized
_____Code the number of days (up through 60) that the occupant stayed in hospital.
(61) 61 days or more
(99) Unknown

38. Working Days Lost 97

_____Code the number of days (up through 60) that the occupant lost from work due to the accident
(00) No working days lost
(61) 61 days or more
(62) Fatally injured
(97) Not working prior to accident
(99) Unknown

STOP - GO TO VARIABLE 44 ON PAGE 7

VARIABLES 39 THROUGH 43 ARE COMPLETED BY THE ZONE CENTER

39. Time to Death 00

_____Code number of hours from time of accident to time of death up through 24 hours. If time of death is greater than 24 hours, code number of days. (Note: 1 day = 31, 2 days = 32, ... n days = 30 +n up through 30 days = 60)
(00) Not fatal
(96) Fatal - ruled disease
(99) Unknown

40. 1st Medically Reported Cause of Death 00

41. 2nd Medically Reported Cause of Death 00

42. 3rd Medically Reported Cause of Death 00

_____Code the Occupant Injury from line number(s) for the medically reported injury(s) which reportedly contributed to this occupant's death
(00) Not fatal or no additional causes
(96) Mode of death given but specific injuries are not linked to cause of death. (specify):

_____
(97) Other result (includes fatal ruled disease) (specify):

_____
(99) Unknown

43. Number of Recorded Injuries for This Occupant 97

_____Code the actual number of injuries recorded for this occupant.
(00) No recorded injuries
(97) Injured, details unknown
(99) Unknown if injured

AUTOMATIC BELT SYSTEM

44. Automatic (Passive) Belt System Availability/ Function [0]
(0) Not equipped/not available
(1) 2 point automatic belts
(2) 3 point automatic belts
(3) Automatic belts - type unknown

Non-functional
(4) Automatic belts destroyed or rendered inoperative
(9) Unknown

45. Automatic (Passive) Belt System Use [0]
(0) Not equipped/not available/destroyed or rendered inoperative
(1) Automatic belt in use
(2) Automatic belt not in use (manually disconnected, motorized track inoperative) (specify):

(3) Automatic belt use unknown
(9) Unknown

46. Automatic (Passive) Belt System Type [0]
(0) Not equipped/not available
(1) Non-motorized system
(2) Motorized system
(9) Unknown

47. Proper Use of Automatic (Passive) Belt System [0]
(0) Not equipped/not available/not used
(1) Automatic belt used properly
(2) Automatic belt used properly with child safety seat

Automatic Belt Used Improperly
(3) Automatic shoulder belt worn under arm
(4) Automatic shoulder belt worn behind back
(5) Automatic belt worn around more than one person
(6) Lap portion of automatic belt worn on abdomen
(7) Automatic lap and shoulder belt or automatic shoulder belt used improperly with child safety seat (specify):

(8) Other improper use of automatic belt system (specify):
(9) Unknown

48. Automatic (Passive) Belt Failure Modes During Accident [0]
(0) Not equipped/not available/not in use
(1) No automatic belt failure(s)
(2) Torn webbing (stretched webbing not included)
(3) Broken buckle or latchplate
(4) Upper anchorage separated
(5) Other anchorage separated (specify):

(6) Broken retractor
(7) Combination of above (specify):
(8) Other automatic belt failure (specify):

(9) Unknown

49. Seat Orientation (this Occupant Position) [1]
(0) Occupant not seated or no seat
(1) Forward facing seat
(2) Rear facing seat
(3) Side facing seat (inward)
(4) Side facing seat (outward)
(8) Other (specify):

(9) Unknown

Check the Primary Source Used In Determining Belt Use.

[ ] Not equipped/not available/destroyed or rendered inoperative
[ ] Vehicle inspection
[ ] Official injury data
[✓] Driver/occupant interview
[ ] Other (specify):

[ ] Unknown if belt used

ARE ALL APPLICABLE MEDICAL RECORDS INCLUDED WITH INITIAL SUBMISSION? NO [✓] YES [ ]

UPDATE CANDIDATE? NO [ ] YES [✓]

BEST AVAILABLE

STOP - VARIABLES 50 THROUGH 53 ARE COMPLETED BY THE ZONE CENTER

TRAUMA DATA

50. Glasgow Coma Scale (GCS) Score (at Medical Facility) 97
    (00) Not injured
    (01) Injured - not treated at medical facility
    (02) No GCS Score at medical facility
    (03-15) Code the actual value of the initial GCS Score recorded at medical facility.
    (97) Injured, details unknown
    (99) Unknown if injured

51. Was the Occupant Given Blood? 9
    (1) No - blood not given
    (2) Yes - blood given
    (specify units):_____
    (9) Unknown if blood given

52. Arterial Blood Gases (ABG) - HCO_3 97
    (00) Not injured
    (01) Injured, ABGs not measured or reported
    (02-50) Code the actual value of the HCO_3
    (96) ABGs reported , HCO_3 unknown
    (97) Injured, details unknown
    (99) Unknown if injured

BELT USE DETERMINATION

53. Primary Source of Belt Use Determination 1
    (0) Not equipped/not available/destroyed or rendered inoperative
    (1) Vehicle inspection
    (2) Official injury data
    (3) Driver/occupant interview
    (8) Other (specify):_____
    (9) Unknown if belt used

U.S. Department of Transportation

National Highway Traffic Safety Administration

OCCUPANT INJURY FORM

Form Approved
O.M.B. No. 2127-0021

NATIONAL ACCIDENT SAMPLING SYSTEM
CRASHWORTHINESS DATA SYSTEM

1. Primary Sampling Unit Number	06	3. Vehicle Number	01
2. Case Number - Stratum	0576	4. Occupant Number	02

INJURY DATA

Record below the actual injuries sustained by this occupant that were identified from the official and unofficial data sources. Remember not to double count an injury just because it was identified from two different sources. If greater than ten injuries have been documented, encode the balance on the Occupant Injury Supplement.

	Source of Injury Data	A.I.S. - 90 Body Region	Type of Anatomic Structure	Specific Anatomic Structure	Level of Injury	A.I.S. Severity	Aspect	Injury Source	Injury Source Confidence Level	Direct/ Indirect Injury	Occupant Area Intrusion Number
		no codable injuries									
1st	5.	6.	7.	8.	9.	10.	11.	12.	13.	14.	15.
2nd	16.	17.	18.	19.	20.	21.	22.	23.	24.	25.	26.
3rd	27.	28.	29.	30.	31.	32.	33.	34.	35.	36.	37.
4th	38.	39.	40.	41.	42.	43.	44.	45.	46.	47.	48.
5th	49.	50.	51.	52.	53.	54.	55.	56.	57.	58.	59.
6th	60.	61.	62.	63.	64.	65.	66.	67.	68.	69.	70.
7th	71.	72.	73.	74.	75.	76.	77.	78.	79.	80.	81.
8th	82.	83.	84.	85.	86.	87.	88.	89.	90.	91.	92.
9th	93.	94.	95.	96.	97.	98.	99.	100.	101.	102.	103.
10th	104.	105.	106.	107.	108.	109.	110.	111.	112.	113.	114.

This report is authorized by P.L. 89-563, Title 1, Section 106, 108, and 112. While you are not required to respond, your cooperation is needed to make the results of this data collection effort comprehensive, accurate, and timely.

OCCUPANT INJURY DATA

	Source of Injury Data	A.I.S. - 90 Body Region	Type of Anatomic Structure	Specific Anatomic Structure	Level of Injury	A.I.S. Severity	Aspect	Injury Source	Injury Source Confidence Level	Direct/ Indirect Injury	Occupant Area Intrusion Number
11th											
12th											
13th											
14th											
15th											
16th											
17th											
18th											
19th											
20th											
21st											
22nd											
23rd											
24th											
25th											

OFFICIAL INJURY DATA – SOFT TISSUE INJURIES

Indicate the Location, Specific Anatomic Structure, Detail (size, depth, fracture type, head injury clinical signs and neurological deficits), and Source of all injuries indicated by official sources (or from PAR or other unofficial sources if medical records and interviewee data are unavailable.)

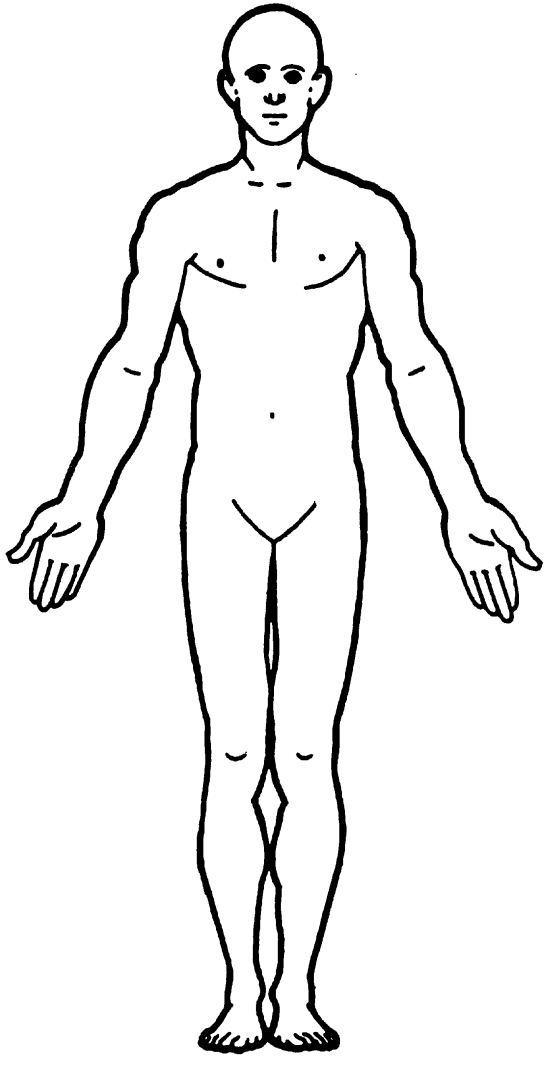

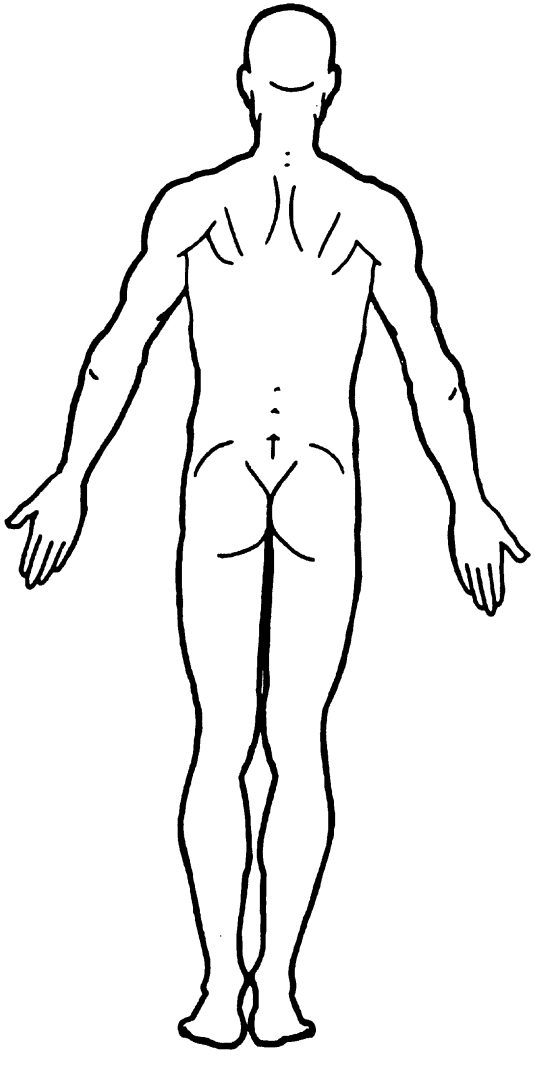

SOURCE OF INJURY DATA

OFFICIAL
(1) Autopsy records with or without hospital/ medical records
(2) Hospital/medical records other than emergency room (e.g., discharge summary)
(3) Emergency room records only (including associated X-rays or other lab reports)
(4) Private physician, walk-in or emergency clinic

UNOFFICIAL
(5) Lay coroner report
(6) E.M.S. personnel
(7) Interviewee
(8) Other source (specify):

(9) Police

INJURY SOURCE

FRONT
(01) Windshield
(02) Mirror
(03) Sunvisor
(04) Steering wheel rim
(05) Steering wheel hub/spoke
(06) Steering wheel (combination of codes 04 and 05)
(07) Steering column, transmission selector lever, other attachment
(08) Add on equipment (e.g., CB, tape deck, air conditioner)
(09) Left instrument panel and below
(10) Center instrument panel and below
(11) Right instrument panel and below
(12) Glove compartment door
(13) Knee bolster
(14) Windshield including one or more of the following: front header, A (A1/A2)-pillar, instrument panel, mirror, or steering assembly (driver side only)
(15) Windshield including one or more of the following: front header, A (A1/A2)-pillar, instrument panel, or mirror (passenger side only)
(16) Driver side air bag compartment cover
(17) Passenger side air bag compartment cover
(18) Windshield reinforced by exterior object (specify):
(19) Other front object (specify):

LEFT SIDE
(20) Left side interior surface, excluding hardware or armrests
(21) Left side hardware or armrest
(22) Left A (A1/A2)-pillar
(23) Left B-pillar
(24) Other left pillar (specify):

(25) Left side window glass or frame
(26) Left side window glass including one or more of the following: frame, window sill, A (A1/A2)-pillar, B-pillar, or roof side rail.
(27) Other left side object (specify):

(28) Left side window sill

RIGHT SIDE
(30) Right side interior surface, excluding hardware or armrests
(31) Right side hardware or armrest
(32) Right A (A1/A2)-pillar
(33) Right B-pillar
(34) Other right pillar (specify):

(35) Right side window glass or frame
(36) Right side window glass including one or more of the following: frame, window sill, A (A1/A2)-pillar, B-pillar, or roof side rail.
(37) Other right side object (specify):

(38) Right side window sill

INTERIOR
(40) Seat, back support
(41) Belt restraint webbing/buckle
(42) Belt restraint B-pillar or door frame attachment point
(43) Other restraint system component (specify):
(44) Head restraint system
(45) Air bag (use codes "16" and "17" for injuries sustained from air bag compartment covers)
(46) Other occupants (specify):

(47) Interior loose objects
(48) Child safety seat (specify):

(49) Other interior object (specify):

ROOF
(50) Front header
(51) Rear header
(52) Roof left side rail
(53) Roof right side rail
(54) Roof or convertible top

FLOOR
(56) Floor (including toe pan)
(57) Floor or console mounted transmission lever, including console
(58) Parking brake handle
(59) Foot controls including parking brake

REAR
(60) Backlight (rear window)
(61) Backlight storage rack, door, etc.
(62) Other rear object (specify):

EXTERIOR of OCCUPANT'S VEHICLE
(65) Hood
(66) Outside hardware (e.g., outside mirror, antenna)
(67) Other exterior surface or tires (specify):
(68) Unknown exterior objects

EXTERIOR OF OTHER MOTOR VEHICLE
(70) Front bumper
(71) Hood edge
(72) Other front of vehicle (specify):

(73) Hood
(74) Hood ornament
(75) Windshield, roof rail, A-pillar
(76) Side surface
(77) Side mirrors
(78) Other side protrusions (specify)

(79) Rear surface
(80) Undercarriage
(81) Tires and wheels
(82) Other exterior of other motor vehicle (specify):

(83) Unknown exterior of other motor vehicle

OTHER VEHICLE OR OBJECT IN THE ENVIRONMENT
(84) Ground
(85) Other vehicle or object (specify)

(86) Unknown vehicle or object

NONCONTACT INJURY
(90) Fire in vehicle
(91) Flying glass
(92) Other noncontact injury source (specify):
(93) Air bag exhaust gases
(97) Injured, unknown source

INJURY SOURCE CONFIDENCE LEVEL

(1) Certain
(2) Probable
(3) Possible
(9) Unknown

DIRECT/INDIRECT INJURY

(1) Direct contact injury
(2) Indirect contact injury
(3) Noncontact injury
(7) Injured, unknown source

OCCUPANT INJURY CLASSIFICATION

Body Region

(1) Head
(2) Face
(3) Neck
(4) Thorax
(5) Abdomen
(6) Spine
(7) Upper Extremity
(8) Lower Extremity
(9) Unspecified

Type of Anatomic Structure

(1) Whole Area
(2) Vessels
(3) Nerves
(4) Organs (includes muscles/ ligaments)
(5) Skeletal (includes joints)
(6) Head - LOC
(9) Skin

Specific Anatomic Structure

Whole Area
(02) Skin - Abrasion
(04) Skin - Contusion
(06) Skin - Laceration
(08) Skin - Avulsion
(10) Amputation
(20) Burn
(30) Crush
(40) Degloving
(50) Injury - NFS
(90) Trauma, other than mechanical

Head - LOC
(02) Length of LOC
(04, 06, 08) Level of Consciousness
(10) Concussion

Spine
(02) Cervical
(04) Thoracic
(06) Lumbar

Vessels, Nerves, Organs. Bones, Joints are assigned consecutive two digit numbers beginning with 02

Level of Injury

Specific injuries are assigned consecutive two-digit numbers beginning with 02.

To the extent possible, within the organizational framework of the AIS, 00 is assigned to an injury NFS as to severity or where only one injury is given in the dictionary for that anatomic structure. 99 is assigned to any injury NFS as to lesion or severity.

Abbreviated Injury Scale

(1) Minor injury
(2) Moderate injury
(3) Serious injury
(4) Severe injury
(5) Critical injury
(6) Maximum (untreatable)
(7) Injured, unknown severity

Aspect

(1) Right
(2) Left
(3) Bilateral
(4) Central
(5) Anterior
(6) Posterior
(7) Superior
(8) Inferior
(9) Unknown
(0) Whole region

OFFICIAL INJURY DATA — SKELETAL INJURIES

Restrained?

___ No

___ Yes

Blood Alcohol Level (mg/dl)

BAL = ____

Glasgow Coma Scale Score

GCSS = ____

Units of Blood Given

Units = ____

Arterial Blood Gases

pH = __.__

PO_2 = ____

PCO_2 ____

HCO_3 ____

Indicate the Location, Specific Anatomic Structure, Detail (size, depth, fracture type, head injury clinical signs and neurological deficits), and Source of all injuries indicated by official sources (or from PAR or other unofficial sources if medical records and interviewee data are unavailable.)

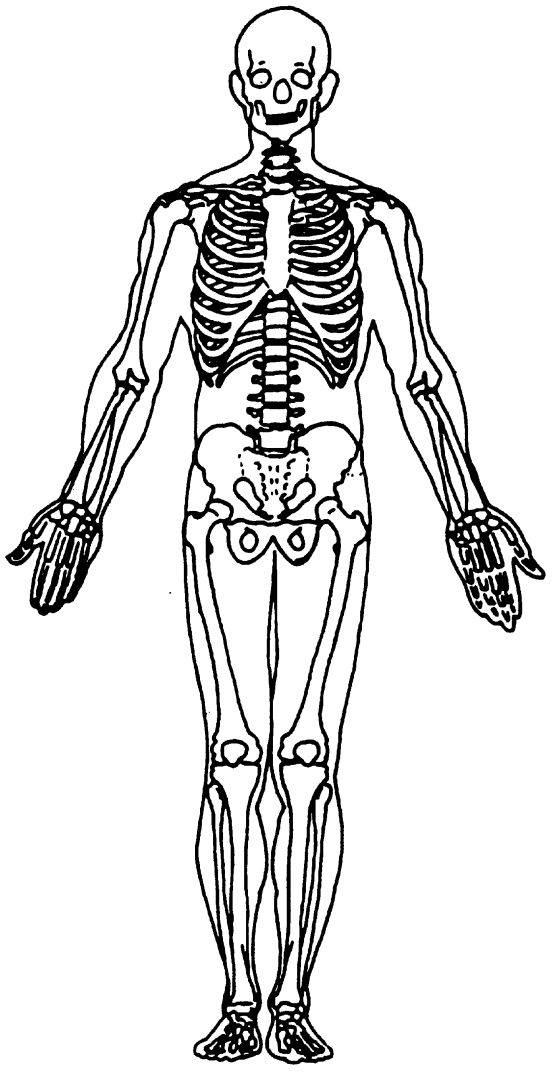

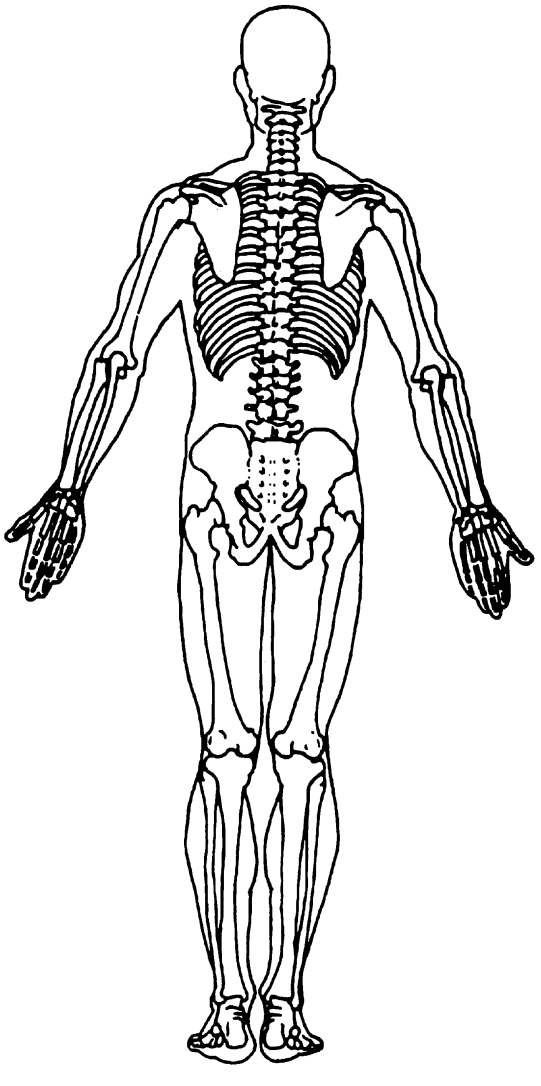

OFFICIAL INJURY DATA – INTERNAL INJURIES

Indicate the Location, Specific Anatomic Structure, Detail (size, depth, fracture type, head injury clinical signs and neurological deficits), and Source of all injuries indicated by official sources (or from PAR or other unofficial sources if medical records and interviewee data are unavailable.)

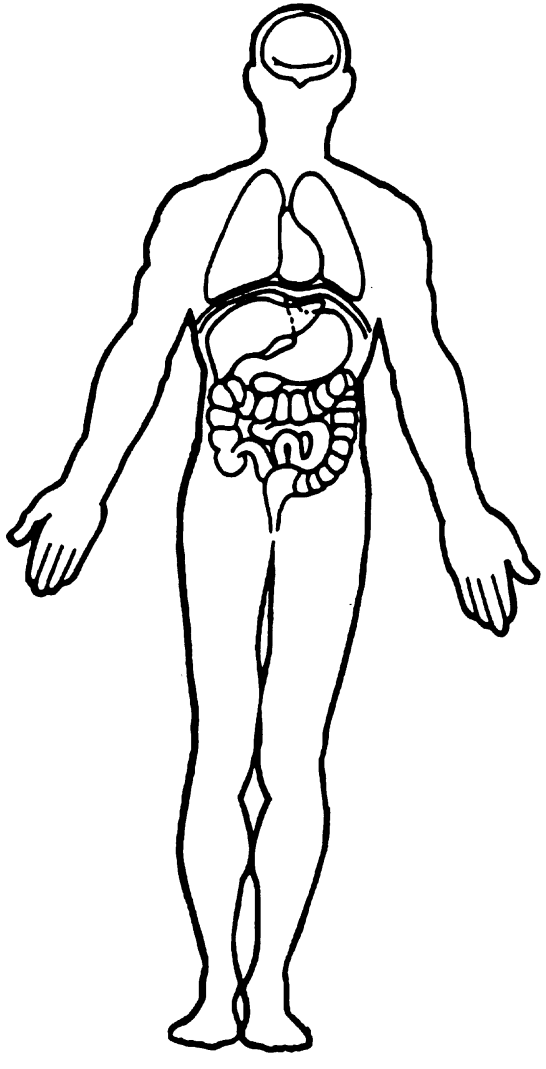

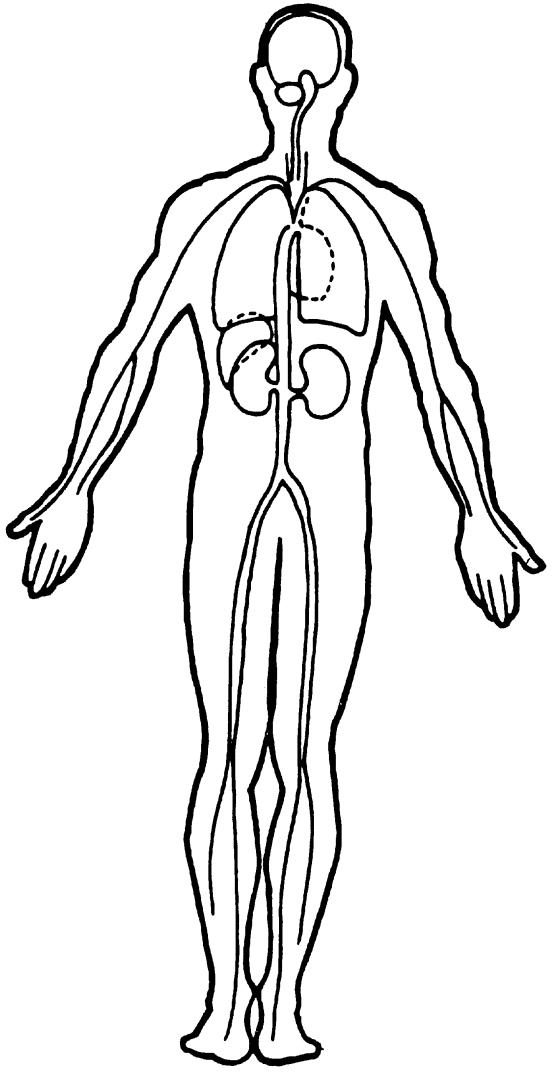

BEST AVAILABLE

```
06057E00000011[redacted]947.0000000000000124000000001[redacted]94[redacted]94[redacted]94[redacted]94004780000
022910000109510
06057E00010012[redacted]947.0010000000000113R3100N
06057E01000021       7.00 0000000009423461211GDEG25K8RR[redacted]10890960890202102022
229990004009979975999 999 9999999010
06057E01000022       7.00 00000000000000000000000000000[redacted]10323181150844
06057E01000031       7.00 000000000013100RDA002
                              01318900102020101001000
06057E01000041       7.00 0000000000011118000002000000000000000010000000010000000
06057E01000042       7.00 000000000
              2             0000015088
06057E01010051       7.00 0000000004421680651110000004000000043021000000000000242
00000000000002000001021011
06057E01010161       7.00 000000000319040212502100
06057E01010261       7.00 000000000379040212523100
06057E01020051       7.00 0000000000210970182130000004046100043021000000000000242
```

U.S. Department of Transportation

National Highway Traffic Safety Administration

SLIDE INDEX

NATIONAL ACCIDENT SAMPLING SYSTEM
CRASHWORTHINESS DATA SYSTEM

Primary Sampling Unit Number 06 Case Number—Stratum 057E

Slide No.	Vehicle No.	Direction of Picture	Description of Slide Subject Matter
1-6	1	South	Approach to accident site
7	1	" "	Right side road departure, rollover onto grass area
8-9	1	North	Lookback of approach
10-24			Exteriors
25-28			Interior
29&30			Photo's showing hair - O, contact
31-35			Interiors
36-42			Back area of van - Shows tires and debris which came off at scene

HS Form 434B (1/94)

BEST AVAILABLE

Slide No.	Vehicle No.	Direction of Picture	Description of Slide Subject Matter

PSU 06-057E (1994) #1

PSU 06-057E (1994) #2

PSU 06-057E (1994) #3

PSU 06-057E (1994) #4

PSU 06-057E (1994) #5

PSU 06-057E (1994) #6

PSU 06-057E (1994) #7

PSU 06-057E (1994) #8

PSU 06-057E (1994) #9

PSU 06-057E (1994) #10

PSU 06-057E (1994) #11

PSU 06-057E (1994) #12

PSU 06-057E (1994) #13

PSU 06-057E (1994) #14

PSU 06-057E (1994) #15

PSU 06-057E (1994) #16

PSU 06-057E (1994) #17

PSU 06-057E (1994) #18

PSU 06-057E (1994) #19

PSU 06-057E (1994) #20

PSU 06-057E (1994) #21

PSU 06-057E (1994) #22

PSU 06-057E (1994) #23

PSU 06-057E (1994) #24

PSU 06-057E (1994) #25

PSU 06-057E (1994) #26

PSU 06-057E (1994) #27

PSU 06-057E (1994) #28
Best Available

PSU 06-057E (1994) #29
Best Available

PSU 06-057E (1994) #30
Best Available

PSU 06-057E (1994) #31

PSU 06-057E (1994) #32

PSU 06-057E (1994) #33

PSU 06-057E (1994) #34

PSU 06-057E (1994) #35

PSU 06-057E (1994) #36

PSU 06-057E (1994) #37

PSU 06-057E (1994) #38

PSU 06-057E (1994) #39

PSU 06-057E (1994) #40

PSU 06-057E (1994) #41

PSU 06-057E (1994) #42