400 Seventh Street, S.W.
Washington, D.C. 20590

U.S. Department
of Transportation

**National Highway
Traffic Safety
Administration**

Dear Crash Data Researchers/Users:

Thank you for choosing crash data from the National Highway Traffic Safety Administration (NHTSA) for your research or other use. The information contained in this motor vehicle crash report is collected, maintained and distributed in accordance with Public Law 89-564. In accordance with this Public Law, NHTSA is required not to release any case information until completion of quality control procedures. These procedures include a review of the case material to extract all names, licenses and registration numbers, non-coded interview material, non-research related researcher comments in the margins, non-factual data, and the production number portion of the vehicle identification number (VIN).

If you requested NHTSA to query its database files in order to identify a specific crash, then that query was made using non-personal descriptors you provided for use in our search. This motor vehicle crash may have been identified from a data search and matches the general, non-personal descriptors you provided, but we cannot confirm that this is the specific crash report you requested.

If you have any questions with regard to the above procedures, please contact the Field Operations Branch, Crash Investigation Division, National Center for Statistics and Analysis at 202-366-4820. Again, please be advised that we cannot confirm that this is the case that you have specifically requested nor can we certify the information to be correct.

*** *** ***

Get it together!
SAFETY BELTS SAVE LIVES

AUTO SAFETY HOTLINE
(800) 424-9393
Wash. D.C. Area 366-0123

U.S. Department of Transportation
National Highway Traffic Safety Administration

CASE SUMMARY

NATIONAL ACCIDENT SAMPLING SYSTEM
CRASHWORTHINESS DATA SYSTEM

PSU 48 CASE NO. 229K TYPE OF ACCIDENT _____

A. DESCRIPTION OF THE ACCIDENT SEQUENCE AND ACCIDENT PECULIARITIES

(Provide a summary of the accident sequence as well as any particular event of the accident that is noteworthy. Injury mechanism and vehicle crashworthiness is the focus, not driver culpability. Do not include any personal identifiers.)

SEE ATTACHED

B. VEHICLE PROFILE(S)

Vehicle No.	Class of Vehicle	Year/Make/Model	Most Severe Damage Based on Vehicle Inspection		Component Failure
			Damage Plane	Severity Description	

DO NOT SANITIZE THIS FORM

C. PERSON PROFILE(S)

Vehicle No.	Person Role	Seat Position	Restraint Use	Most Severe Injury (TO BE COMPLETED BY ZONE CENTER)			
				Body Region	Injury Type	AIS	Injury Source

Body Region

Abdomen
Ankle—foot
Arm (upper)
Back-thoracolumbar spine
Brain
Chest
Ears
Eye
Elbow
Face
Forearm
Head—skull
Heart
Kidneys
Knee
Leg (lower)
Liver
Lower limbs(s) (whole or unknown part)
Mouth
Neck—cervical spine
Nose
Pelvic—hip
Pulmonary—lungs
Shoulder
Spleen
Thigh
Thyroid, other endocrine gland
Upper limb(s) (whole or unknown part)
Vertebrae
Whole body
Wrist—hand

Injury Type

Abrasion
Amputation
Avulsion
Burn
Concussion
Contusion
Crush
Detachment, separation
Dislocation
Fracture
Fracture and dislocation
Laceration
Other
Perforation, puncture
Rupture
Sprain
Strain
Total severance, transection
Unknown

Abbreviated Injury Scale

(1) Minor injury
(2) Moderate injury
(3) Serious injury
(4) Severe injury
(5) Critical injury
(6) Maximum (untreatable)
(7) Injured, unknown severity

DO NOT SANITIZE THIS FORM

*U.S. GPO: 1996-

PSU48 1996 Case Summary Form
CASE 229K
TYPE OF ACCIDENT: CAR-ROLLOVER

A. DESCRIPTION OF THE ACCIDENT SEQUENCE AND ACCIDENT PECULIARITIES

V1 WAS SOUTBOUND ON A FOUR LANE DIVIDED INTERSTATE. V1 WAS TRAVELING IN THE LEFT LANE WHEN ITS LEFT REAR TIRE BLEW OUT. THE FRICTION CAUSED BY THE FLAT RESULTED IN V1 ROLLING OVER TO THE RIGHT. V1 UNDERWENT THREE QUARTER TURNS BEFORE COMING TO FINAL REST ON ITS LEFT PLANE ON THE RIGHT SHOULDER EDGE OF THE SOUTHBOUND LANES. THE RESTRAINED DRIVER AND RESTRAINED FRONT SEAT PASSENGER WERE TRANSPORTED AND HOSPITALIZED. THE UNRESTRAINED REAR SEAT PASSENGER WAS TRANSPORTED AND HOSPITALIZED AT THE SAME LOCAL TRAUMA CENTER AS OCCUPANTS 1 AND 2.
01

PSU48 1996 Case Summary Form
CASE 229K
TYPE OF ACCIDENT: CAR-ROLLOVER

B. VEHICLE PROFILE(S)

Veh. No	Class of Vehicle	Year/Make/ Model	Most Severe Damage Based on Vehicle Inspection: Damage Plane	Severity Descr.	Component Failure
1 01	COMPACT UTILITY	91/TOYOTA/4-RUNNER	TOP	MODERATE	NONE

PSU48 1996 Case Summary Form
CASE 229K
TYPE OF ACCIDENT: CAR-ROLLOVER

C. PERSON PROFILE(S)

Veh. No	Person Role	Seat Positon	Restraint Use	Most Severe Injury (TO BE COMPLETED BY ZONE CENTER) Body Region	Injury Type	AIS	Injury Source
1	DR	FL	LAP/SHOUL MANUAL	BRAIN	SUBDURAL	4	ROOF
1	PASS	FR	LAP/SHOUL MANUAL	BRAIN	LOC	2	ROOF SIDE RAIL
1	PASS	2ND L	NONE	BRAIN	LOC	2	ROOF

O

U.S. Department of Transportation
National Highway Traffic Safety Administration

ACCIDENT COLLISION DIAGRAM

NATIONAL ACCIDENT SAMPLING SYSTEM
CRASHWORTHINESS DATA SYSTEM

PSU No. 48 Case Number—Stratum 2 2 9 1K Indicate North

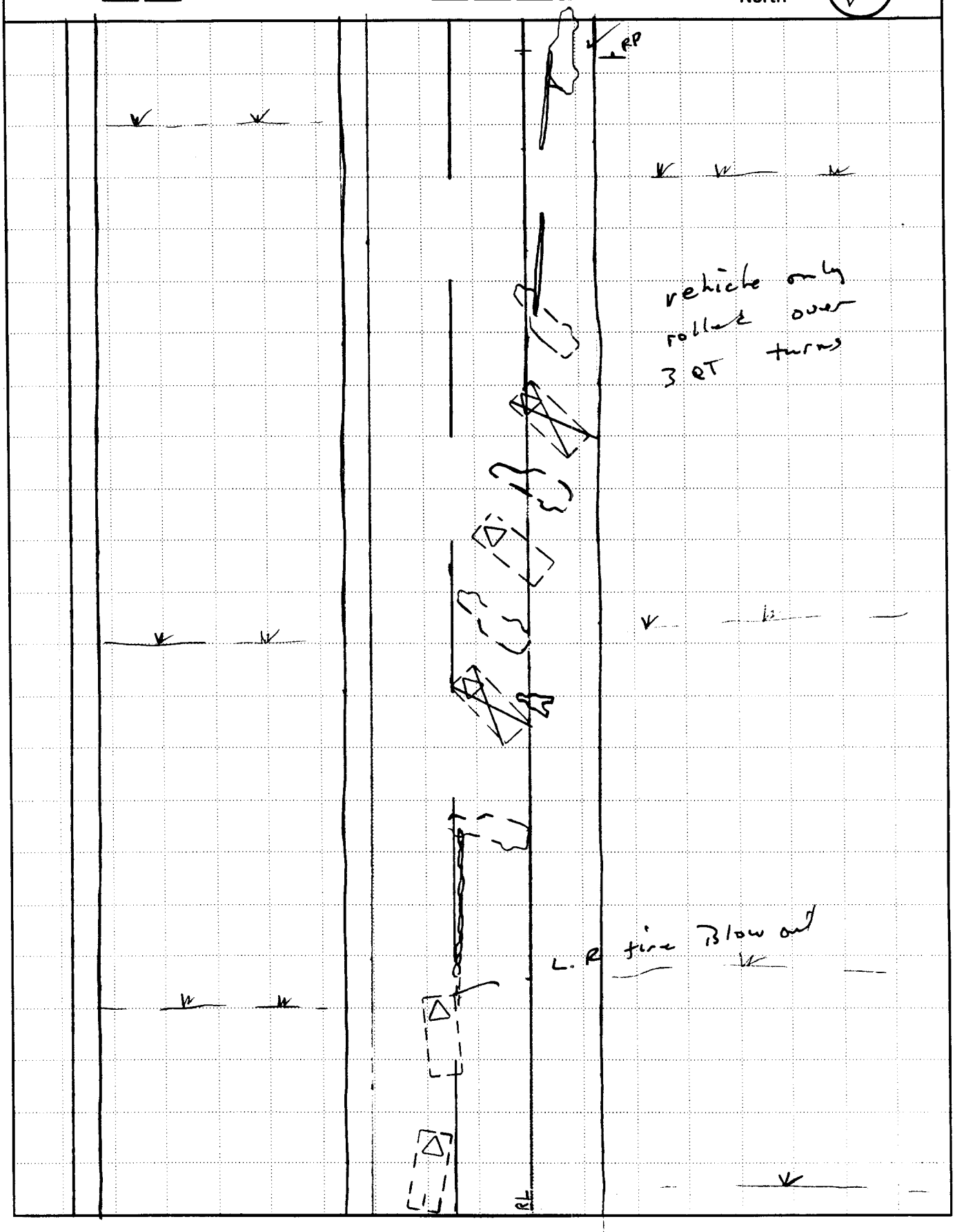

HS Form 431B (1/96)

*U.S. GPO: 1996-[redacted]

Scale: 1 centimeter = 2.5 meters

U.S. Department of Transportation
National Highway Traffic Safety Administration

ACCIDENT COLLISION DIAGRAM

NATIONAL ACCIDENT SAMPLING SYSTEM
CRASHWORTHINESS DATA SYSTEM

PSU No. 4 8 Case Number—Stratum 2 2 9 4 Indicate North

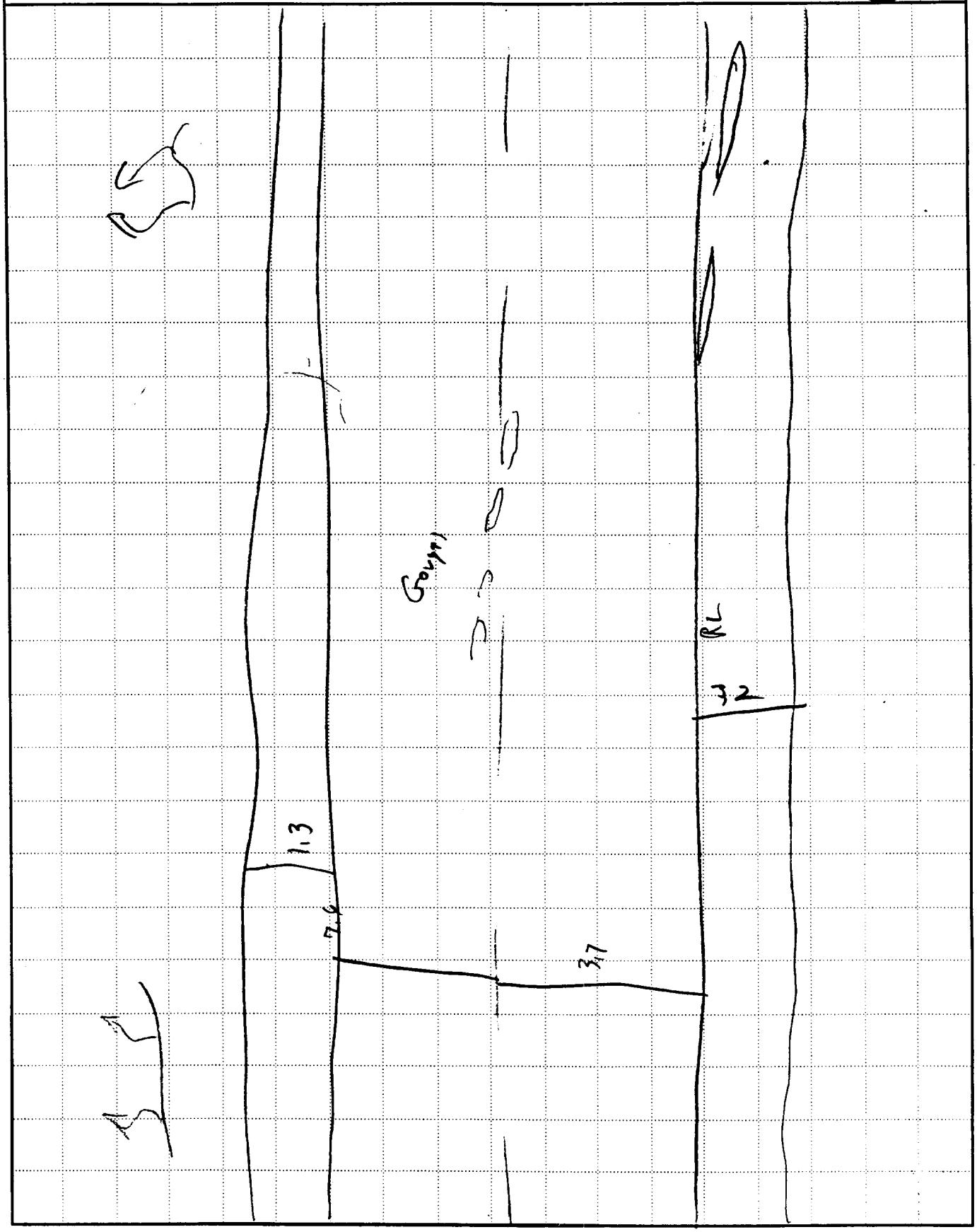

HS Form 431B (1/96)

*U.S. GPO: 199[redacted]

Scale: 1 centimeter = _____ meters

U.S. Department of Transportation
National Highway Traffic Safety Administration

ACCIDENT COLLISION MEASUREMENT TABLE

NATIONAL ACCIDENT SAMPLING SYSTEM
CRASHWORTHINESS DATA SYSTEM

Primary Sampling Unit Number 48 Case Number–Stratum 2 2 9 K

ACCIDENT COLLISION DIAGRAM

Document the physical plant:

- all road/roadway delineation (e.g., curbs/edge lines, lane markings, median markings, pavement markings, parked vehicles, poles, signs, etc.)
- all traffic controls (e.g., signs/signals, etc.)
- north arrow placed on diagram
- roadway surface type and condition of applicable roadways
- grade measurements for all applicable roadways and at location of rollover initiation
- roadway curvature (include measurement of precrash superelevation for each vehicle if applicable)

Document vehicle dynamics including:

- reference point and reference line relative to physical features present at the scene
- scaled documentation of all accident induced physical evidence
- scaled documentation of all roadside objects contacted
- scaled representations of the vehicle(s) at pre-impact, impact, and final rest based upon either:
  - a) physical evidence, or
  - b) reconstructed accident dynamics

Distance between Node 1 and Node 2 on PAR is appx 30 mils

CRASH DATA

	VEH. #1	VEH. #2	VEH. #3
Heading Angle	180		
Surface Type	Asph		
Surface Condition	Dry		
Coefficient of Friction	.7		
Grade (v/h) Measurement (between impact and final rest)	+ 4/122		
Grade (v/h) Measurement (at location of rollover initiation)	+ 4/122		
Grade (v/h) Measurement (at pre-crash location)	+ 4/122		

Reference Point: Merge Sign on West Road Edge

Reference line: West road Edge of Southbound Traffic

Item	Distance and Direction from Reference Point	Distance and Direction from Reference Line
Gouge on Roadway 1 beg	44.8	3.6 E
" End	37.6	3.4 E
Gouge 1 off road beg	12.7	.4 W
End	9.6	.5 W
1' 2 off road beg	4.8	.9 W
End	.1 N	1.2 W
Slight skid End	45.4	3.7 E
beg	46.6	3.6 E

Item	Distance and Direction from Reference Point	Distance and Direction from Reference Line

☆U.S. GOVERNMENT PRINTING OFFICE: 1996 - [redacted]

U.S. Department of Transportation
National Highway Traffic Safety Administration

ACCIDENT FORM

NATIONAL ACCIDENT SAMPLING SYSTEM
CRASHWORTHINESS DATA SYSTEM

1. Primary Sampling Unit Number: 4 8
2. Case Number - Stratum: 2 2 9 1K

IDENTIFICATION

3. Number of General Vehicle Forms Submitted: 0 1
4. Date of Accident (Month,Day,Year): [redacted] 9 6
5. Time of Accident: 1 9 3 0

Code reported military time of accident.

NOTE: Midnight = 2400
Unknown = 9999

SPECIAL STUDIES - INDICATORS

Check (✓) each special study (SS15-SS18 below) that has been completed; code 1 for the checked special studies and 0 for the special studies not checked.

6. ___ SS15 Administrative Use: 0
7. ___ SS16 Pedestrian Crash Data Study: 0
(Data for this special study available in a separate file.)
8. ___ SS17 Impact Fires: 0
9. ___ SS18 Unsafe Driver Actions: 0
10. ___ SS19 Run Off Road: 0

NUMBER OF EVENTS

11. Number of Recorded Events in This Accident: 0 1

Code the number of events which occurred in this accident.

ACCIDENT EVENTS

For each event that occurred in the accident, code the lowest numbered vehicle in the left columns and the other involved vehicle or object in the right columnns.

Accident Event Sequence Number	Vehicle Number	Class Of Vehicle	General Area of Damage	Vehicle Number or Object Contacted	Class Of Vehicle	General Area of Damage
12. 0 1	13. 0 1	14. 1 4	15. T	16. 3 1	17. 0 0	18. N
19. 0 2	20. ___ ___	21. ___ ___	22. ___	23. ___ ___	24. ___ ___	25. ___
26. 0 3	27. ___ ___	28. ___ ___	29. ___	30. ___ ___	31. ___ ___	32. ___
33. 0 4	34. ___ ___	35. ___ ___	36. ___	37. ___ ___	38. ___ ___	39. ___
40. 0 5	41. ___ ___	42. ___ ___	43. ___	44. ___ ___	45. ___ ___	46. ___

IF GREATER THAN FIVE EVENTS, CONTINUE CODING ON THE ACCIDENT EVENT SUPPLEMENT

CODES FOR CLASS OF VEHICLE

(00) Not a motor vehicle
(01) Subcompact/mini (wheelbase < 254 cm)
(02) Compact (wheelbase ≥ 254 but < 265 cm)
(03) Intermediate (wheelbase ≥ 265 but < 278 cm)
(04) Full size (wheelbase ≥ 278 but < 291 cm)
(05) Largest (wheelbase ≥ 291 cm)
(09) Unknown passenger car size
(14) Compact utility vehicle
(15) Large utility vehicle (≤ 4,536 kgs GVWR)
(16) Utility station wagon (≤ 4,536 kgs GVWR)
(19) Unknown utility type
(20) Minivan (≤ 4,536 kgs GVWR)
(21) Large van (≤ 4,536 kgs GVWR)
(24) Van Based school bus (≤ 4,536 kgs GVWR)
(28) Other van type (≤ 4,536 kgs GVWR)
(29) Unknown van type (≤ 4,536 kgs GVWR)
(30) Compact pickup truck (≤ 4,536 kgs GVWR)
(31) Large pickup truck (≤ 4,536 kgs GVWR)
(38) Other pickup truck (≤ 4,536 kgs GVWR)
(39) Unknown pickup truck type (≤ 4,536 kgs GVWR
(45) Other light truck (≤ 4,536 kgs GVWR)
(48) Unknown light truck type (≤ 4,536 kgs GVWR)
(49) Unknown light vehicle type
(50) School bus (excludes van based)(>4,536 kgs GVWR)
(58) Other bus (> 4,536 kgs GVWR)
(59) Unknown bus type
(60) Truck (> 4,536 kgs GVWR)
(67) Tractor without trailer
(68) Tractor-trailer(s)
(78) Unknown medium/heavy truck type
(79) Unknown light/medium/heavy truck type
(80) Motored cycle
(90) Other vehicle
(99) Unknown

CODES FOR GENERAL AREA OF DAMAGE (GAD)

CDS APPLICABLE AND OTHER VEHICLES
(0) Not a motor vehicle
(N) Noncollision
(F) Front
(R) Right side
(L) Left side
(B) Back
(T) Top
(U) Undercarriage
(9) Unknown

TDC APPLICABLE VEHICLES
(0) Not a motor vehicle
(N) Noncollision
(F) Front
(R) Right side
(L) Left side
(B) Back of unit with cargo area (rear of trailer or straight truck)
(D) Back (rear of tractor)
(C) Rear of cab
(V) Front of cargo area
(T) Top
(U) Undercarriage
(9) Unknown

CODES FOR VEHICLE NUMBER OR OBJECT CONTACTED

(01-30) — Vehicle Number

Noncollision
(31) Overturn — rollover (excludes end-over-end)
(32) Rollover — end-over-end
(33) Fire or explosion
(34) Jackknife
(35) Other intraunit damage (specify):
_____
(36) Noncollision injury
(38) Other noncollision (specify):
_____
(39) Noncollision — details unknown

Collision With Fixed Object
(41) Tree (≤ 10 cm in diameter)
(42) Tree (> 10 cm in diameter)
(43) Shrubbery or bush
(44) Embankment
(45) Breakaway pole or post (any diameter)

Nonbreakaway Pole or Post
(50) Pole or post (≤ 10 cm in diameter)
(51) Pole or post (> 10 cm but ≤ 30 cm in diameter)
(52) Pole or post (> 30 cm in diameter)
(53) Pole or post (diameter unknown)

(54) Concrete traffic barrier
(55) Impact attenuator
(56) Other traffic barrier (includes guardrail) (specify):_____
(57) Fence
(58) Wall
(59) Building
(60) Ditch or culvert
(61) Ground
(62) Fire hydrant
(63) Curb
(64) Bridge
(68) Other fixed object (specify):
_____
(69) Unknown fixed object

Collision with Nonfixed Object
(70) Passenger car, light truck, van, or other vehicle not in-transport
(71) Medium/heavy truck or bus not in-transport
(72) Pedestrian
(73) Cyclist or cycle
(74) Other nonmotorist or conveyance
_____
(75) Vehicle occupant
(76) Animal
(77) Train
(78) Trailer, disconnected in transport
(79) Object fell from vehicle in-transport
(88) Other nonfixed object (specify):
_____
(89) Unknown nonfixed object

(98) Other event (specify):
_____
(99) Unknown event or object

PRECRASH ENVIRONMENTAL DATA

19. Relation To Interchange Or Junction — 0
(0) Non-interchange area and non-junction
(1) Interchange area related

Non-Interchange junctions
(2) Intersection related
(3) Driveway, alley access related
(4) Other junction (specify)
_____
(5) Unknown type of junction

(9) Unknown

20. Trafficway Flow — 1
(0) Not physically divided (two way traffic)
(1) Divided trafficway-median strip without positive barrier
(2) Divided trafficway-median strip with positive barrier
(3) One way traffic
(9) Unknown

21. Number Of Travel Lanes — 2
(1) One
(2) Two
(3) Three
(4) Four
(5) Five
(6) Six
(7) Seven or more
(9) Unknown

22. Roadway Alignment — 1
(1) Straight
(2) Curve right
(3) Curve left
(9) Unknown

23. Roadway Profile — 1
(1) Level
(2) Uphill grade (>2%)
(3) Hill crest
(4) Downhill grade (>2%)
(5) Sag
(9) Unknown

24. Roadway Surface Type — 2
(1) Concrete
(2) Bituminous (asphalt)
(3) Brick or block
(4) Slag, gravel, or stone
(5) Dirt
(8) Other (specify): _____
(9) Unknown

25. Roadway Surface Condition — 1
(1) Dry
(2) Wet
(3) Snow or slush
(4) Ice
(5) Sand, dirt, or oil
(8) Other (specify): _____
(9) Unknown

26. Light Conditions — 2
(1) Daylight
(2) Dark
(3) Dark, but lighted
(4) Dawn
(5) Dusk
(9) Unknown

27. Atmospheric Conditions — 0
(0) No adverse atmospheric-related driving conditions
(1) Rain
(2) Sleet/hail
(3) Snow
(4) Fog
(5) Rain and fog
(6) Sleet and fog
(7) Other (e.g., smog, smoke, blowing sand or dust, etc.) (specify):
_____
(9) Unknown

28. Traffic Control Device — 0
(0) No traffic control(s)
(1) Traffic control signal (not RR crossing)

Regulatory
(2) Stop sign
(3) Yield sign
(4) School zone sign
(5) Other regulatory sign (specify):
_____
(6) Warning sign (not RR crossing)
(7) Unknown sign
(8) Miscellaneous/other controls including RR controls (specify):
_____
(9) Unknown

29. Traffic Control Device Functioning — 0
(0) No traffic control device
(1) Traffic control device not functioning (specify):
_____
(2) Traffic control device functioning properly
(9) Unknown

OCCUPANT RELATED

37. Driver Presence in Vehicle 1
(0) Driver not present
(1) Driver present
(9) Unknown

38. Number of Occupants This Vehicle 0 3
(00-96) Code actual number of occupants for this vehicle
(97) 97 or more
(99) Unknown

39. Number of Occupant Forms Submitted 0 3

AIR BAG RELATED

40. Is this an AOPS Vehicle? 0
(0) No (includes unknown)
(1) Yes - researcher determined
(2) VIN determined air bag system
(3) VIN determined automatic (passive) belts
(4) VIN determined air bag and automatic (passive) belts

41. Air Bag(s) Deployment, First Seat Frontal 0
(0) Not equipped or not available
(1) No air bags deployed

Single Air Bag Vehicle
(2) Driver air bag deployed
(3) Driver air bag, unknown if deployed

Multiple Air Bag Vehicle
(4) Driver side only deployed
(5) Passenger side only deployed
(6) Driver and passenger side deployed
(7) Driver and passenger side unknown if deployed
(8) Air bag(s) deployed, details unknown
(9) Unknown

42. Air Bag(s) Deployment, Other Than First Seat Frontal 0
(0) Not equipped with an "other" air bag
(1) Deployed during accident (as a result of impact)
(2) Deployed inadvertently just prior to accident
(3) Deployed, details unknown
(4) Deployed as a result of a noncollision event during accident sequence (e.g., fire, explosion, electrical)
(5) Unknown if deployed
(7) Nondeployed
(9) Unknown

Specify type of "other" air bag present: _____

VEHICLE WEIGHT ITEMS

43. Vehicle Curb Weight 1,700
____ Code weight to nearest 10 kilograms.
(045) Less than 454 kilograms
(612) 6,124 kilograms or more
(999) Unknown
3,740 lbs X .4536 = 1,696 kgs
Source: [redacted]

44. Vehicle Cargo Weight 0,030
____ Code weight to nearest 10 kilograms.
(000) Less than 5 kilograms
(454) 4,536 kilograms or more
(999) Unknown
75 lbs X .4536 = 34 kgs
Source: [redacted]

ROLLOVER DATA

45. Rollover 03 07
(00) No rollover (no overturning)

Rollover (primarily about the longitudinal axis)
(01-16) Code the number of quarter turns
(17) Rollover, 17 or more quarter turns (specify): _____
(98) Rollover--end-over-end (i.e., primarily about the lateral axis)
(99) Rollover (overturn), details unknown

46. Rollover Initiation Type 0 1
(00) No rollover
(01) Trip-over
(02) Flip-over
(03) Turn-over
(04) Climb-over
(05) Fall-over
(06) Bounce-over
(07) Collision with another vehicle
(08) Other rollover initiation type specify): _____
(98) Rollover--end-over-end
(99) Unknown rollover initiation type

47. Location of Rollover Initiation 1
(0) No rollover
(1) On roadway
(2) On shoulder—paved
(3) On shoulder—unpaved
(4) On roadside or divided trafficway median
(8) Rollover--end-over-end
(9) Unknown

48. Rollover Initiation Object Contacted 6 1
(Note: Applicable codes on back of page)

49. Location on Vehicle Where Initial Principal Tripping Force Is Applied 1
(0) No rollover
(1) Wheels/tires
(2) Side plane
(3) End plane
(4) Undercarriage
(5) Other location on vehicle (specify): _____
(6) Non-contact rollover forces (specify): _____
(8) Rollover--end-over-end
(9) Unknown

50. Direction of Initial Roll 1
(0) No rollover
(1) Roll right - primarily about the longitudinal axis
(2) Roll left - primarily about the longitudinal axis
(8) Rollover--end-over-end
(9) Unknown roll direction

CODES FOR ROLLOVER INITIATION OBJECT CONTACTED

(00) No rollover
(01-30) — Vehicle Number

Noncollision
(31) Turn-over — fall-over
(32) No rollover impact initiation (end-over-end)
(34) Jackknife

Collision With Fixed Object
(41) Tree (≤ 10 cm in diameter)
(42) Tree (> 10 cm in diameter)
(43) Shrubbery or bush
(44) Embankment

(45) Breakaway pole or post (any diameter)

Nonbreakaway Pole or Post
(50) Pole or post (≤ 10 cm in diameter)
(51) Pole or post (> 10 cm but ≤ 30 cm in diameter)
(52) Pole or post (> 30 cm in diameter)
(53) Pole or post (diameter unknown)

(54) Concrete traffic barrier
(55) Impact attenuator
(56) Other traffic barrier (includes guardrail) (specify):_____

(57) Fence
(58) Wall
(59) Building
(60) Ditch or culvert
(61) Ground
(62) Fire hydrant
(63) Curb
(64) Bridge
(68) Other fixed object (specify):

_____

(69) Unknown fixed object

Collision with Nonfixed Object
(70) Passenger car, light truck, van, or other vehicle not in-transport
(71) Medium/heavy truck or bus not in-transport
(76) Animal
(77) Train
(78) Trailer, disconnected in transport
(79) Object fell from vehicle in-transport
(88) Other nonfixed object (specify):

_____

(89) Unknown nonfixed object

(98) Other event (specify):

_____

(99) Unknown event or object

U.S. Department of Transportation
National Highway Traffic Safety Administration

INTERIOR VEHICLE FORM

NATIONAL ACCIDENT SAMPLING SYSTEM
CRASHWORTHINESS DATA SYSTEM

1. Primary Sampling Unit Number 48
2. Case Number - Stratum 22 9 K
3. Vehicle Number 01

INTEGRITY

4. Passenger Compartment Integrity 98
(00) No integrity loss

Yes, Integrity Was Lost Through
(01) Windshield
(02) Door (side)
(03) Door/hatch (back door)
(04) Roof
(05) Roof glass
(06) Side window
(07) Rear window (backlight)
(08) Roof and roof glass
(09) Windshield and door (side)
(10) Windshield and roof
(11) Side and rear window (side window and backlight)
(12) Windshield and side window
(13) Door and side window
(98) Other combination of above (specify): all Side windshield and Backlight
(99) Unknown

Door, Tailgate or Hatch Opening

5. LF 3 6. RF 3 7. LR 3 8. RR 1 9. TG/H 1

(0) No door/gate/hatch
(1) Door/gate/hatch remained closed and operational
(2) Door/gate/hatch came open during collision
(3) Door/gate/hatch jammed shut
(8) Other (specify): _____
(9) Unknown

Damage/Failure Associated with Door, Tailgate or Hatch Opening in Collision. If IV05-IV09 ≠ 2, Then code Ø

10. LF 0 11. RF 0 12. LR 0 13. RR 0 14. TG/H Ø

(0) No door/gate/hatch or door not opened

Door, Tailgate or Hatch Came Open During Collision
(1) Door operational (no damage)
(2) Latch/striker failure due to damage
(3) Hinge failure due to damage
(4) Door structure failure due to damage
(5) Door support (i.e., pillar, sill, roof side rail, etc.) failure due to damage
(6) Latch/striker and hinge failure due to damage
(8) Other failure (specify): _____
(9) Unknown

GLAZING

Type of Window/Windshield Glazing

15. WS 1 16. LF 2 17. RF 2 18. LR 2 19. RR 2
20. BL 2 21. Roof 0 22. Other 2

(0) No glazing
(1) AS-1 — Laminated
(2) AS-2 — Tempered
(3) AS-3 — Tempered-tinted (original)
(4) AS-2 — Tempered-with after market tint
(5) AS-3 — Tempered-tinted (with additional after market tint)
(6) AS-14 — Glass/Plastic
(7) Glazing removed prior to accident
(8) Other (specify): _____
(9) Unknown

Window Precrash Glazing Status

23. WS 1 24. LF 2 25. RF 2 26. LR 2 27. RR 2
28. BL 2 29. Roof 0 30. Other 1

(0) No glazing
(1) Fixed
(2) Closed
(3) Partially opened
(4) Fully opened
(7) Glazing removed prior to accident
(9) Unknown

Glazing Damage from Impact Forces

31. WS 4 32. LF 6 33. RF 6 34. LR 6 35. RR 6
36. BL 6 37. Roof 0 38. Other 6

(0) No glazing
(1) No glazing damage from impact forces
(2) Glazing in place and cracked from impact forces
(3) Glazing in place and holed from impact forces
(4) Glazing out-of-place (cracked or not) and not holed from impact forces
(5) Glazing out-of-place and holed from impact forces
(6) Glazing disintegrated from impact forces
(7) Glazing removed prior to accident
(9) Unknown if damaged

Glazing Damage from Occupant Contact

39. WS 1 40. LF 1 41. RF 1 42. LR 1 43. RR 1
44. BL 1 45. Roof 0 46. Other 1

(0) No glazing
(1) No occupant contact to glazing
(2) Glazing contacted by occupant but no glazing damage
(3) Glazing in place and cracked by occupant contact
(4) Glazing in place and holed by occupant contact
(5) Glazing out-of-place (cracked or not) by occupant contact and not holed by occupant contact
(6) Glazing out-of-place by occupant contact and holed by occupant contact
(7) Glazing removed prior to accident
(8) Glazing disintegrated by occupant contact
(9) Unknown if contacted by occupant

INTRUSION WORKSHEET

NOTE: SKETCH INTRUDED AREAS

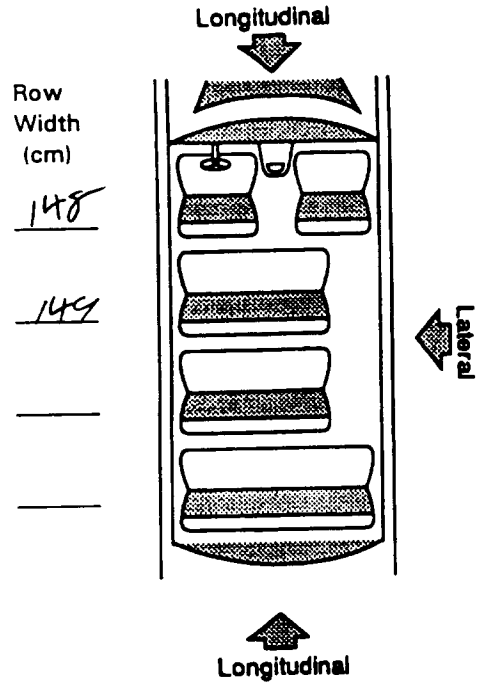

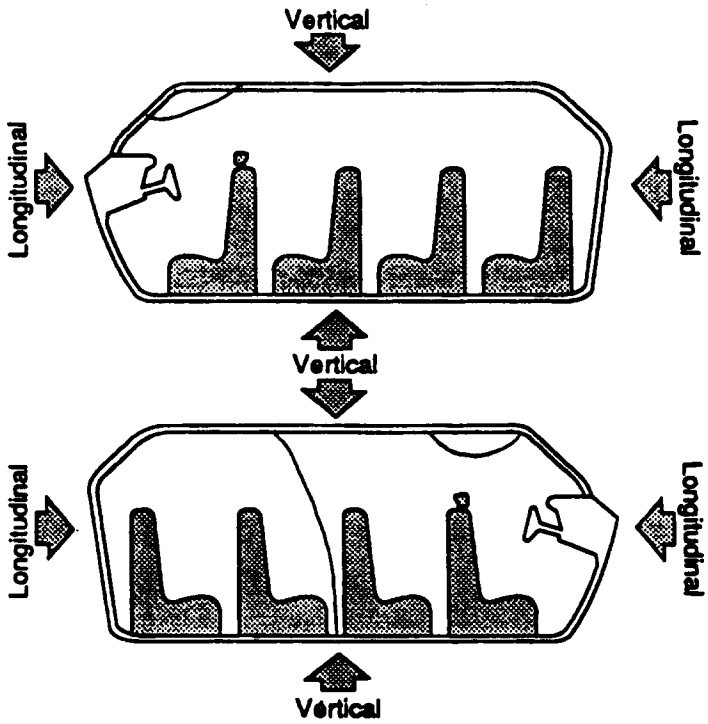

LOCATION OF INTRUSION	INTRUDED COMPONENT	(All Measurements Are In Centimeters) COMPARISON VALUE	–	INTRUDED VALUE	=	INTRUSION	DOMINANT CRUSH DIRECTION
11	Roof	43	–	37	=	6	vert
13	Roof	43	–	42	=	1	vert
13	A-pillar	58	–	57	=	1	long
11	A-pillar	58	–	51	=	7	long
11	Roof side rail		–	2	=	2	vert
21	" "		–	2	=	2	vert
11	windshield	0	–	32	=	32	vert
12	"	0	–	32	=	32	vert
13	"	0	–	32	=	32	vert
			–		=		
			–		=		
			–		=		
			–		=		
			–		=		
			–		=		

Document no more than the 15 most severe intrusions

OCCUPANT AREA INTRUSION

Note: If no intrusions, leave variables IV47-IV86 blank.

	Location of Intrusion	Intruding Component	Magnitude of Intrusion	Dominant Crush Direction
1st	47. 1 1	48. 1 5	49. 4	50. 1
2nd	51. 1 2	52. 1 5	53. 4	54. 1
3rd	55. 1 3	56. 1 5	57. 4	58. 1
4th	59. 1 1	60. 0 6	61. 1	62. 2
5th	63. 1 1	64. 1 3	65. 1	66. 1
6th	67. 1 1	68. 1 4	69. 1	70. 1
7th	71. 1 1	72. 1 7	73. 1	74. 1
8th	75. 1 3	76. 1 3	77. 1	78. 1
9th	79. 1 3	80. 1 4	81. 1	82. 1
10th	83.	84.	85.	86.

LOCATION OF INTRUSION

Front Seat
- (11) Left
- (12) Middle
- (13) Right

Second Seat
- (21) Left
- (22) Middle
- (23) Right

Third Seat
- (31) Left
- (32) Middle
- (33) Right

Fourth Seat
- (41) Left
- (42) Middle
- (43) Right

- (97) Catastrophic
- (98) Other enclosed area (specify) _____
- (99) Unknown

INTRUDING COMPONENT

Interior Components
- (01) Steering assembly
- (02) Instrument panel left
- (03) Instrument panel center
- (04) Instrument panel right
- (05) Toe pan
- (06) A (A1/A2)-pillar
- (07) B-pillar
- (08) C-pillar
- (09) D-pillar
- (10) Side panel - forward of the A1/A2-pillar
- (11) Door panel (side)
- (12) Side panel - rear of the B-pillar
- (13) Roof (or convertible top)
- (14) Roof side rail
- (15) Windshield
- (16) Windshield header
- (17) Window frame
- (18) Floor pan (includes sill)
- (19) Backlight header
- (20) Front seat back
- (21) Second seat back
- (22) Third seat back
- (23) Fourth seat back
- (24) Fifth seat back
- (25) Seat cushion
- (26) Back door/panel (e.g., tailgate)
- (27) Other interior component (specify): _____

Exterior Components
- (30) Hood
- (31) Outside surface of this vehicle (specify): _____
- (32) Other exterior object in the environment (specify): _____
- (33) Unknown exterior object
- (97) Catastrophic
- (98) Intrusion of unlisted component(s) (specify): _____
- (99) Unknown

MAGNITUDE OF INTRUSION

- (1) ≥ 3 centimeters but < 8 centimeters
- (2) ≥ 8 centimeters but < 15 centimeters
- (3) ≥ 15 centimeters but < 30 centimeters
- (4) ≥ 30 centimeters but < 46 centimeters
- (5) ≥ 46 centimeters but < 61 centimeters
- (6) ≥ 61 centimeters
- (7) Catastrophic
- (9) Unknown

DOMINANT CRUSH DIRECTION

- (1) Vertical
- (2) Longitudinal
- (3) Lateral
- (7) Catastrophic
- (9) Unknown

STEERING RIM/SPOKE DEFORMATION

(All Measurements Are in Centimeters)

COMPARISON VALUE	—	DAMAGE VALUE	=	DEFORMATION
	—		=	
	—		=	
	—		=	
	—		=	

STEERING COLUMN

87. Steering Column Type 2
(1) Fixed column
(2) Tilt column
(3) Telescoping column
(4) Tilt and telescoping column
(8) Other column type (specify): _____
(9) Unknown

88. Tilt Steering Column Adjustment 1
(0) No tilt steering column
(1) Full up
(2) Between full up and center
(3) Center
(4) Between center and full down
(5) Full down
(9) Unknown

89. Telescoping Steering Column Adjustment 0
(0) No telescoping steering column
(1) Full back
(2) Between full back and midpoint
(3) Midpoint
(4) Between midpoint and full forward
(5) Full forward
(9) Unknown

90. Steering Rim/Spoke Deformation 0 0
____ Code actual measured deformation to the nearest centimeter
(00) No steering rim deformation
(01-14) Actual measured value in centimeters
(15) 15 centimeters or more
(98) Observed deformation cannot be measured
(99) Unknown

91. Location of Steering Rim/Spoke Deformation 0 0
(00) No steering rim deformation

Quarter Sections
(01) Section A
(02) Section B
(03) Section C
(04) Section D

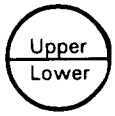

Half Sections
(05) Upper half of rim/spoke
(06) Lower half of rim/spoke
(07) Left half of rim/spoke
(08) Right half of rim/spoke

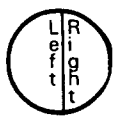

(09) Complete steering wheel collapse
(10) Undetermined location
(99) Unknown

INSTRUMENT PANEL

92. Odometer Reading 1 3 5 ,000
____ kilometers
Code to the nearest 1,000 kilometers
(000) No odometer
(001) Less than 1,500 kilometers
(500) 499,500 kilometers or more
(999) Unknown
83,996 miles X 1.6093 = 135,174 kilometers
Source: [redacted]

93. Instrument Panel Damage from Occupant Contact? 0
(0) No
(1) Yes
(9) Unknown

94. Type of Knee Bolster Covering 0
(0) No knee bolster
(1) Padded
(2) Rigid plastic
(8) Other (specify): _____
(9) Unknown

95. Knee Bolsters Deformed from Occupant Contact? 0
(0) No knee bolster
(1) No deformation
(2) Yes - deformation
(9) Unknown

96. Did Glove Compartment Door Open During Collision(s)? 1
(0) No glove compartment door
(1) No - door did not open
(2) Yes - door opened
(9) Unknown

97. Adaptive (Assistive) Driving Equipment 0
(0) No adaptive driving equipment
(1) Adaptive driving equipment installed
(Check all that apply.)
[ ] Hand controls for braking/acceleration
[ ] Steering control devices (attached to OEM steering wheel
[ ] Steering knob attached to steering wheel
[ ] Low effort power steering (unit or device)
[ ] Replacement steering wheel (i.e., reduced diameter)
[ ] Joy-stick steering controls
[ ] Wheelchair tie-downs
[ ] Modification to seat belts (specify): _____
[ ] Additional or relocated switches (specify): _____
[ ] Raised roof
[ ] Wall-mounted head rest (used behind wheelchair)
[ ] Other adaptive device (specify): _____
(9) Unknown

13-22 Rock

VEHICLE INTERIOR SKETCHES

Note area of ejection/entrapment

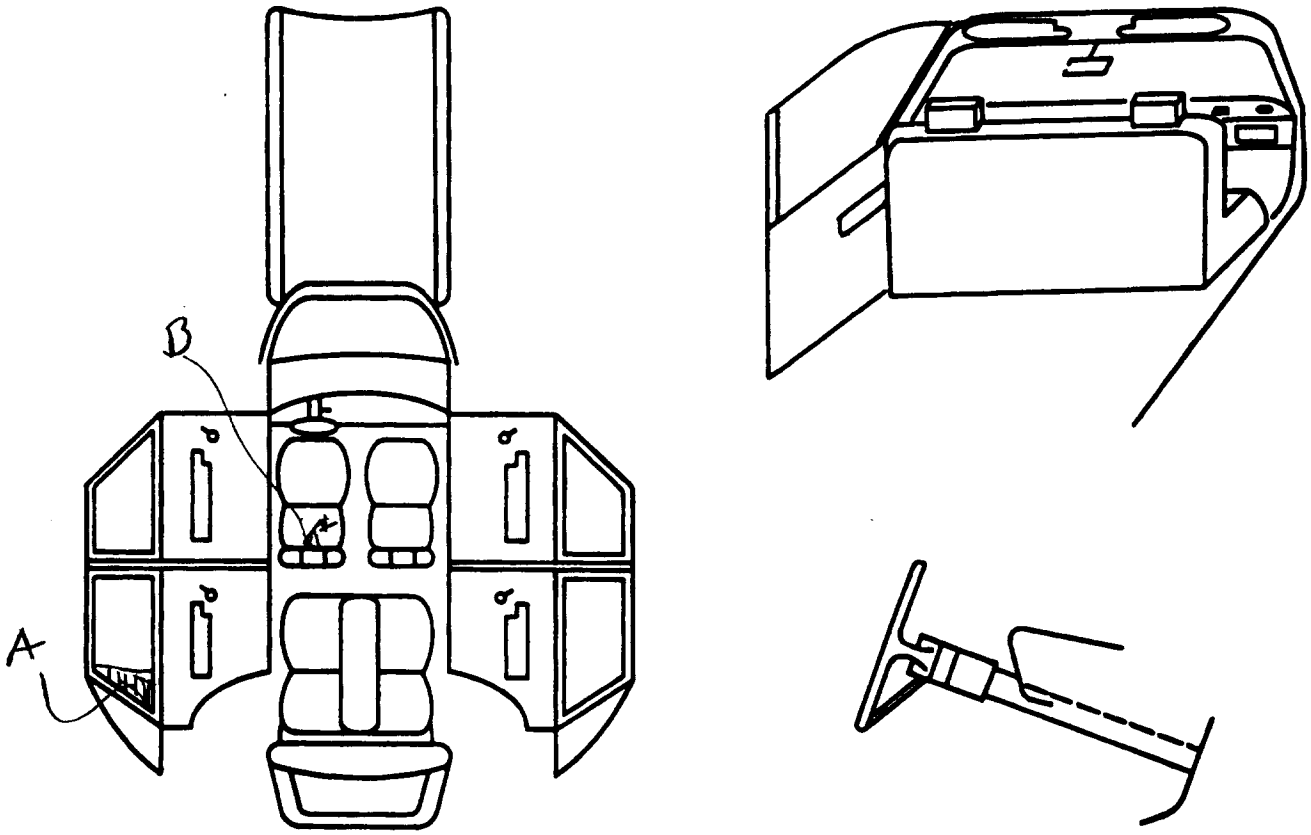

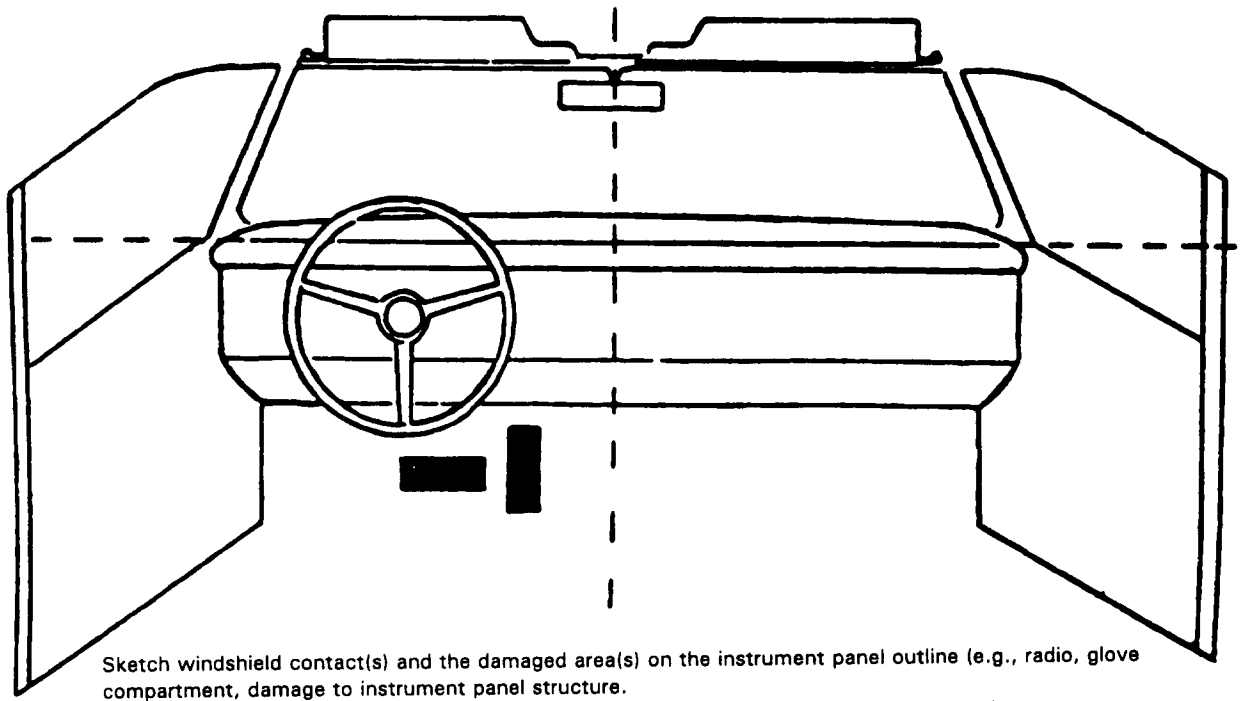

Sketch windshield contact(s) and the damaged area(s) on the instrument panel outline (e.g., radio, glove compartment, damage to instrument panel structure.
Cross hatch contact points, draw spider webs or use other annotation as may be appropriate.
Annotate the contacted area with a letter (begin with A) and list on the Points of Occupant Contact page.

POINTS OF OCCUPANT CONTACT

Contact	Interior Component Contacted	Occupant No. If Known	Body Region If Known	Supporting Physical Evidence	Confidence Level of Contact Point
A	056	3	Head	blood	1
B	151	1	?	blood	2
C					
D					
E					
F					
G					
H					
I					
J					
K					
L					
M					
N					

CODES FOR INTERIOR COMPONENTS

FRONT
(001) Windshield
(002) Mirror
(003) Sunvisor
(004) Steering wheel rim
(005) Steering wheel hub/spoke
(006) Steering wheel (combination of codes 004 and 005)
(007) Steering column,transmission selector lever, other attachment
(008) Cellular telephone or CB radio
(009) Add on equipment(e.g., tapedeck, air conditioner)
(010) Left instrument panel and below
(011) Center instrument panel and below
(012) Right instrument panel and below
(013) Glove compartment door
(014) Knee bolster
(015) Windshield including one or more of the following: front header, A (A1/A2)-pillar, instrument panel, mirror, or steering assembly (driver side only)
(016) Windshield including one or more of the following: front header, A (A1/A2)-pillar, instrument panel, or mirror (passenger side only)
(017) Windshield reinforced by exterior object, (specify): _____
(019) Other front object (specify): _____

LEFT SIDE
(051) Left side interior surface, excluding hardware or armrests
(052) Left side hardware or armrest
(053) Left A (A1/A2)-pillar
(054) Left B-pillar
(055) Other left pillar (specify): _____
(056) Left side window glass
(057) Left side window frame
(058) Left side window sill
(059) Left side window glass including one or more of the following: frame, window sill, A (A1/A2)-pillar, B-pillar, or roof side rail.
(060) Other left side object (specify): _____

RIGHT SIDE
(101) Right side interior surface, excluding hardware or armrests
(102) Right side hardware or armrest
(103) Right A (A1/A2)-pillar
(104) Right B-pillar
(105) Other right pillar (specify): _____
(106) Right side window glass
(107) Right side window frame
(108) Right side window sill
(109) Right side window glass including one or more of the following: frame, window sill, A (A1/A2)-pillar, B-pillar, or roof side rail.
(110) Other right side object (specify): _____

INTERIOR
(151) Seat, back support
(152) Belt restraint webbing/buckle
(153) Belt restraint B-pillar or door frame attachment point
(154) Other restraint system component (specify): _____
(155) Head restraint system
(160) Other occupants (specify): _____
(161) Interior loose objects
(162) Child safety seat (specify): _____
(163) Other interior object (specify): _____

AIR BAG
(170) Air bag-driver side
(175) Air bag compartment cover-driver side
(180) Air bag-passenger side
(185) Air bag compartment cover-passenger side
(190) Other air bag (specify) _____
(195) Other air bag compartment cover (specify) _____

ROOF
(201) Front header
(202) Rear header
(203) Roof left side rail
(204) Roof right side rail
(205) Roof or convertible top

FLOOR
(251) Floor (including toe pan)
(252) Floor or console mounted transmission lever, including console
(253) Parking brake handle
(254) Foot controls including parking brake

REAR
(301) Backlight (rear window)
(302) Backlight storage rack, door, etc.
(303) Other rear object (specify): _____

ADAPTIVE (ASSISTIVE) DRIVING EQUIPMENT
(401) Hand controls for braking/acceleration
(402) Steering control devices (attached to OEM steering wheel)
(403) Steering knob attached to steering wheel
(405) Replacement steering wheel (i.e., reduced diameter)
(406) Joy stick steering controls
(407) Wheelchair tie-downs
(408) Modification to seat belts, (specify): _____
(409) Additional or relocated switches, (specify): _____
(410) Raised roof
(411) Wall mounted head rest (used behind wheel chair)
(412) Other adaptive device (specify): _____

CONFIDENCE LEVEL OF CONTACT POINT
(1) Certain
(2) Probable
(3) Possible
(9) Unknown

MANUAL RESTRAINTS

NOTES: Encode the applicable data **for each seat position** in the vehicle. The attribute for the variable may be found below. Restraint systems should be assessed during the vehicle inspection then coded on the Occupant Assessment Form.

If a child safety seat is present, encode the data on the back of this page 11.

If the vehicle has automatic restraints available, encode the appropriate data on page 6.

		Left	Center	Right
FIRST	A-Availability	4		4
	B-Evidence of usage	04		04
	C-Used in this crash?	04		04
	D-Proper Use	1		1
	E-Failure Modes	1		1
	F-Anchorage Adjustment	1		1
SECOND	A-Availability	4	3	4
	B-Evidence of usage	00	00	00
	C-Used in this crash?	00	00	00
	D-Proper Use	0	6	0
	E-Failure Modes	0	0	0
	F-Anchorage Adjustment	1	1	1
OTHER	A-Availability			
	B-Evidence of usage			
	C-Used in this crash?			
	D-Proper Use			
	E-Failure Modes			
	F-Anchorage Adjustment			

A-Manual (Active) Belt System Availability

(0) None available
(1) Belt removed/destroyed
(2) Shoulder belt
(3) Lap belt
(4) Lap and shoulder belt
(5) Belt available - type unknown

Integral Belt Partially Destroyed

(6) Shoulder belt (lap belt destroyed/removed)
(7) Lap belt (shoulder belt destroyed/removed)
(8) Other belt (specify): _____
(9) Unknown

B/C-Manual (Active) Belt System Use

(00) None used, not available, or belt removed/destroyed
(01) Inoperable (specify): _____
(02) Shoulder belt
(03) Lap belt
(04) Lap and shoulder belt
(05) Belt used - type unknown
(08) Other belt used (specify): _____
(12) Shoulder belt used with child safety seat
(13) Lap belt used with child safety seat
(14) Lap and shoulder belt used with child safety seat
(15) Belt used with child safety seat - type unknown
(18) Other belt used with child safety seat (specify): _____
(99) Unknown if belt used

D-Proper Use of Manual (Active) Belts

(0) None used or not available
(1) Belt used properly
(2) Belt used properly with child safety seat

Belt Used Improperly

(3) Shoulder belt worn under arm
(4) Shoulder belt worn behind back or seat
(5) Belt worn around more than one person
(6) Lap belt worn on abdomen
(7) Lap belt or lap and shoulder belt used improperly with child safety seat (specify): _____
(8) Other improper use of manual belt system (specify): _____
(9) Unknown

E-Manual (Active) Belt Failure Modes During Accident

(0) No manual belt used or not available
(1) No manual belt failure(s)
(2) Torn webbing (stretched webbing not included)
(3) Broken buckle or latchplate
(4) Upper anchorage separated
(5) Other anchorage separated (specify): _____
(6) Broken retractor
(7) Combination of above (specify): _____
(8) Other manual belt failure (specify): _____
(9) Unknown

F-Shoulder Belt Upper Anchorage Adjustment

(0) No shoulder belt
(1) No upper anchorage adjustment for shoulder belt

Adjustable shoulder Belt Upper Anchorage

(2) In full up position
(3) In mid position
(4) In full down position
(5) Position unknown
(9) Unknown if position has adjustable upper anchorage adjustment

AUTOMATIC RESTRAINTS

NOTES: Encode the data for each applicable front seat position. The attribute for the variables may be found below. Restraint systems should be assessed during the vehicle inspection then coded on the Occupant Assessment Form.

AIR BAGS

		Frontal Air Bags--**Left Front**	Frontal Air Bags-**Right Front**	OtherAir Bag
FIRST	Availability/Function	0	0	
	Deployment	1	1	
	Failure			

Air Bag System Availability/Function
(0) Not equipped/not available
(1) Air bag

Non-functional
(2) Air bag disconnected (specify): _____
(3) Air bag not reinstalled
(9) Unknown

Air Bag System Deployment **(This Occupant Position)**
(0) Not equipped/not available
(1) Deployed during accident (as a result of impact)
(2) Deployed inadvertently just prior to accident
(3) Deployed, accident sequence undetermined
(4) Deployed as a result of a noncollision event during accident sequence (e.g., fire, explosion, electrical)
(5) Unknown if deployed
(7) Nondeployed
(9) Unknown

Are There Indications of Air Bag System Failure? (This Occupant Position)
(0) Not equipped/not available
(1) No
(2) Yes (specify): _____
(9) Unknown

AUTOMATIC BELTS

		Left	Right
FIRST	A-Availability/Function	0	0
	B-Use	1	1
	C-Type		
	D-Proper Use		
	E-Failure Modes		

A-Automatic (Passive) Belt System Availability/Function
(0) Not equipped/not available
(1) 2 point automatic belts
(2) 3 point automatic belts
(3) Automatic belts - type unknown

Non-functional
(4) Automatic belts destroyed or rendered inoperative
(9) Unknown

B-Automatic (Passive) Belt System Use
(0) Not equipped/not available/destroyed or rendered inoperative
(1) Automatic belt in use
(2) Automatic belt not in use (manually disconnected, motorized track inoperative)
(3) Automatic belt use unknown
(9) Unknown

C-Automatic (Passive) Belt System Type
(0) Not equipped/not available
(1) Non-motorized system
(2) Motorized system
(9) Unknown

D-**Proper Use of Automatic (Passive) Belt System**
(0) Not equipped/not available/not used
(1) Automatic belt used properly
(2) Automatic belt used properly with child safety seat

Automatic Belt Used Improperly
(3) Automatic shoulder belt worn under arm
(4) Automatic shoulder belt worn behind back
(5) Automatic belt worn around more than one person
(6) Lap portion of automatic belt worn on abdomen
(7) Automatic lap and shoulder belt or automatic shoulder belt used improperly with child safety seat (specify): _____
(8) Other improper use of automatic belt system (specify): _____
(9) Unknown

E-Automatic (Passive) Belt Failure Modes During Accident
(0) Not equipped/not available/not in use
(1) No automatic belt failure(s)
(2) Torn webbing (stretched webbing not included)
(3) Broken buckle or latchplate
(4) Upper anchorage separated
(5) Other anchorage separated (specify): _____
(6) Broken retractor
(7) Combination of above (specify):
(8) Other automatic belt failure (specify): _____
(9) Unknown

FIRST SEAT FRONTAL AIR BAGS

NOTES: Encode the applicable data ***for the driver and first seat passenger*** in the vehicle. The attribute for the variable may be found below. Restraint systems should be assessed during the vehicle inspection then coded on the Occupant Assessment Form.

	Driver	Passenger
A-Type of air bag?	0	0
B-Flaps open at tear points?	1	1
C-Flaps damaged?		
D-Air bag damaged?		
E-Source of air bag damage		
F-Air bag tethered?		
G-Air bag have vent ports?		
H-Other occupant contact air bag?		
I-Occupant wearing eyewear?		

A-Type of Air Bag
- (0) Not equipped/not available
- (1) Original manufacturer installed system
- (2) Retrofitted air bag
- (3) Replacement air bag
- (8) Unknown type of air bag
- (9) Unknown

B-Did Air Bag Module Cover Flap(s) Open At Designated Tear Points?
- (0) Not equipped/not available
- (1) No
- (2) Yes
- (3) Deployed, unknown if flap(s) opened at designated tear points
- (7) Not deployed
- (8) Unknown if deployed
- (9) Unknown

C-Were Air Bag Module Cover Flap(s) Damaged?
- (0) Not equipped/not available
- (1) No
- (2) Yes (specify): _____
- (3) Deployed, unknown if air bag module cover flap(s) damaged
- (7) Not deployed
- (8) Unknown if deployed
- (9) Unknown

D-Was There Damage To The Air Bag?
- (00) Not equipped/not available
- (01) Not damaged

Yes - Air Bag Damage
- (02) Ruptured
- (03) Cut
- (04) Torn
- (05) Holed
- (06) Burned
- (07) Abraded
- (88) Other damage (specify): _____
- (95) Damaged, details unknown
- (96) Deployed, unknown if damaged
- (97) Not deployed
- (98) Unknown if deployed
- (99) Unknown

E-Source of Air Bag Damage
- (00) Not equipped/not available
- (01) Not damaged
- (02) Object worn by occupant, (specify): _____
- (03) Object carried by occupant, (specify): _____
- (04) Adaptive/assistive controls, (specify): _____
- (05) Fire in vehicle
- (06) Thermal burns
- (07) Rescue or emergency efforts
- (88) Other damage source (specify): _____
- (95) Damaged, unknown source
- (96) Deployed, unknown if damaged
- (97) Not deployed
- (98) Unknown if deployed
- (99) Unknown

F-Was The Air Bag Tethered?
- (0) Not equipped/not available
- (1) No
- (2) Yes (specify number of tether straps): _____
- (3) Deployed, unknown if tethered
- (7) Not deployed
- (8) Unknown if deployed
- (9) Unknown

G-Did The Air Bag Have Vent Ports?
- (0) Not equipped/not available
- (1) No
- (2) Yes (specify number of vent ports): _____
- (3) Deployed, unknown if vent ports present
- (7) Not deployed
- (8) Unknown if deployed
- (9) Unknown

H-Was the Air Bag in this Occupant's Position Contacted by Another Occupant?
- (0) Not equipped/not available
- (1) No
- (2) Yes (specify): _____
- (3) Deployed, unknown if other occupant contact to air bag
- (7) Not deployed
- (8) Unknown if deployed
- (9) Unknown

I-Was This Occupant Wearing Eye-wear?
- (0) Not equipped/not available
- (1) No
- (2) Eyeglasses/sunglasses
- (3) Contact lenses
- (4) Deployed, unknown if eyewear worn
- (7) Not deployed
- (8) Unknown if deployed
- (9) Unknown

DRIVER AIR BAG DAMAGE AND CONTACT SKETCHES

1. SKETCH DAMAGE AND CONTACT EVIDENCE ON DRIVER AIR BAG (Front)

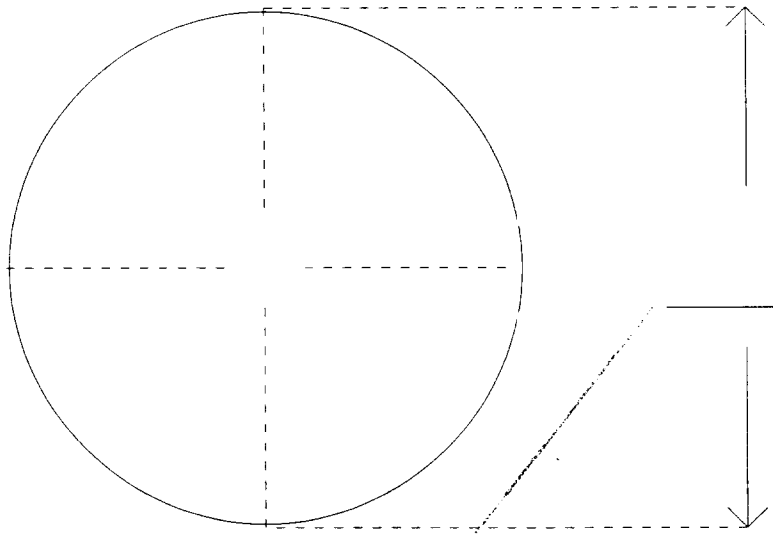

2. SKETCH DAMAGE AND CONTACT EVIDENCE ON DRIVER AIR BAG (Back)

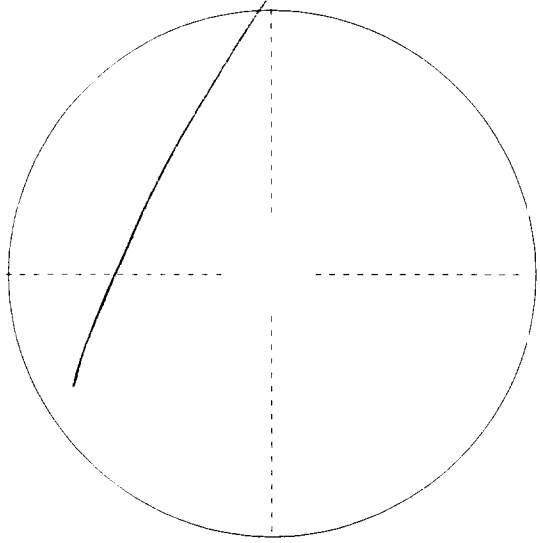

DRIVER AIR BAG SKETCHES (Cont'd)

3. DRIVER AIR BAG MODULE COVER FLAP SIZE (SINGLE)

width (W_U) _____ width (W_L) _____

height (H) _____

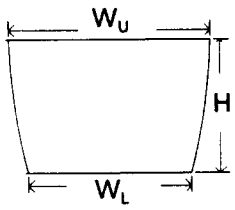

4. DRIVER AIR BAG MODULE COVER FLAP SIZE (DOUBLE)

a. Upper Flap b. Lower Flap

width (W_U) _____ width (W_L) _____

height (H_U) _____ height (H_L) _____

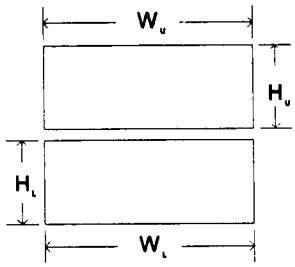

5. SKETCH OF OTHER TYPE OF AIR BAG MODULE FLAP AND SIZE

6. SKETCH OF OTHER TYPE OF AIR BAG VENT PORTS

7. SKETCH LOCATION OF CIRCULAR AIR BAG VENT PORTS

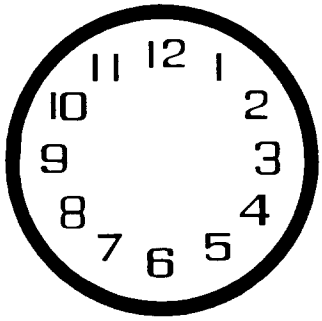

PASSENGER AIR BAG DAMAGE AND CONTACT SKETCHES

1. SKETCH DAMAGE AND CONTACT EVIDENCE ON PASSENGER AIR BAG (Front)

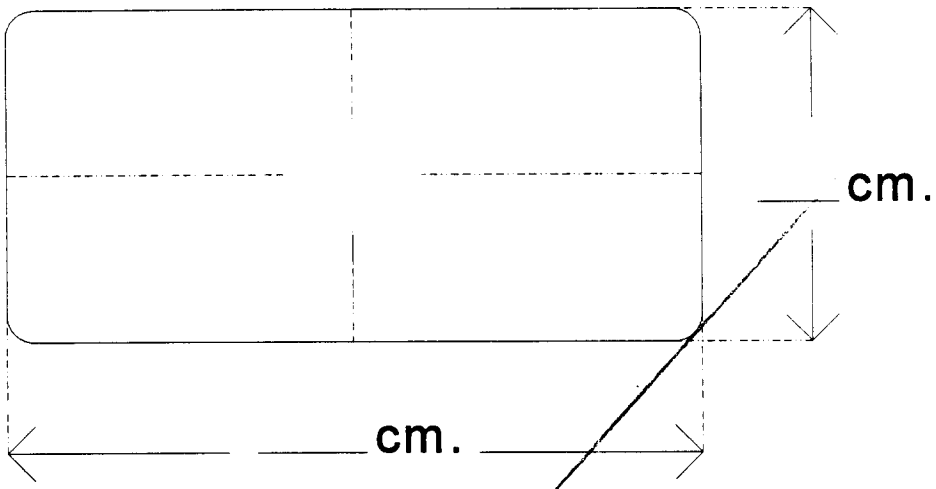

2. SKETCH DAMAGE AND CONTACT EVIDENCE ON PASSENGER AIR BAG (Back)

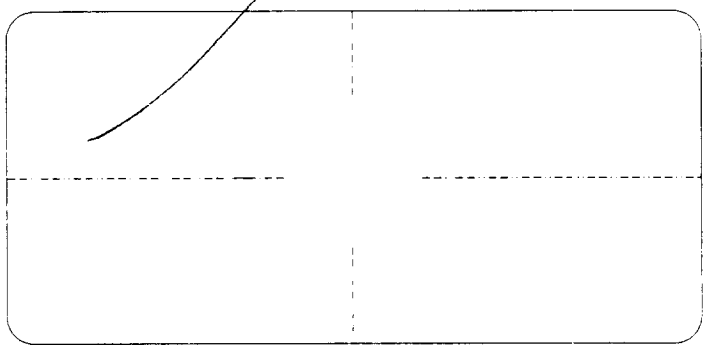

PASSENGER AIR BAG SKETCHES (Cont'd)

3. PASSENGER AIR BAG MODULE COVER FLAP SIZE (SINGLE)

width (W) _____

height (H) _____

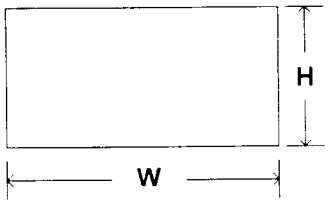

4. PASSENGER AIR BAG MODULE COVER FLAP SIZE (DOUBLE)

a. Upper Flap

width (W_U) _____

height (H_U) _____

b. Lower Flap

width (W_L) _____

height (H_L) _____

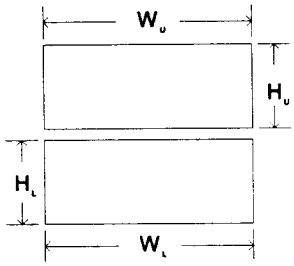

5. SKETCH OF OTHER TYPE OF AIR BAG MODULE FLAP AND SIZE

6. SKETCH OF OTHER TYPE OF AIR BAG VENT PORTS

7. SKETCH LOCATION OF RECTANGULAR AIR BAG VENT PORTS

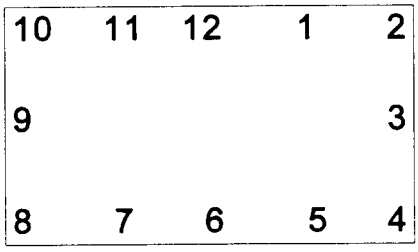

"OTHER" AIR BAG DAMAGE AND CONTACT SKETCHES

1. SKETCH DAMAGE AND CONTACT EVIDENCE ON *"OTHER"* AIR BAG (Front)

2. SKETCH DAMAGE AND CONTACT EVIDENCE ON *"OTHER"* AIR BAG (Back)

"OTHER" AIR BAG SKETCHES (Cont'd)

3. SKETCH AIR BAG MODULE FLAP AND SIZE OR OPENING FOR AIRBAG

4. SKETCH AIR BAG VENT PORTS

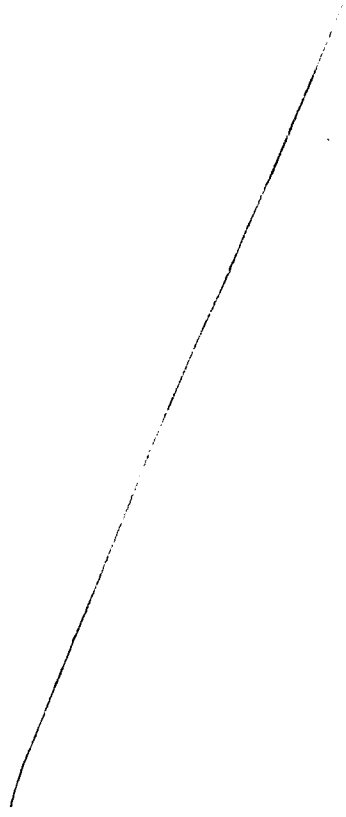

HEAD RESTRAINTS/SEAT EVALUATION

NOTES: **Encode the applicable data for each seat position in the vehicle. The attribute for these variables may be found on the next page. Head restraint type/damage and seat type/performance should be assessed during the vehicle inspection then coded on the Occupant Assessment Form.**

		Left	Center	Right
FIRST	A-Head Restraint Type/Damage	3		3
	B-Seat Type	01		01
	C-Seat Orientation	1		1
	D-Seat Track Position	6		6
	E-Seat Back Incline Pre/Post Impact	23		23
	F-Seat Performance	1		1
SECOND	A-Head Restraint Type/Damage	3	0	3
	B-Seat Type	07	07	07
	C-Seat Orientation	1	1	1
	D-Seat Track Position	1	1	1
	E-Seat Back Incline Pre/Post Impact	01	01	01
	F-Seat Performance	1	1	1
THIRD	A-Head Restraint Type/Damage			
	B-Seat Type			
	C-Seat Orientation			
	D-Seat Track Position			
	E-Seat Back Incline Pre/Post Impact			
	F-Seat Performance			
OTHER	A-Head Restraint Type/Damage			
	B-Seat Type			
	C-Seat Orientation			
	D-Seat Track Position			
	E-Seat Back Incline Pre/Post Impact			
	F-Seat Performance			

DESCRIBE ANY INDICATION OF ABNORMAL OCCUPANT POSTURE

(I.E., UNUSUAL OCCUPANT CONTACT PATTERN)

HEAD RESTRAINTS/SEAT EVALUATION

A-Head Restraint Type/Damage by Occupant at This Occupant Position
(0) No head restraints
(1) Integral — no damage
(2) Integral — damaged during accident
(3) Adjustable — no damage
(4) Adjustable — damaged during accident
(5) Add-on — no damage
(6) Add-on — damaged during accident
(8) Other Specify):_____
(9) Unknown

B-Seat Type (this Occupant Position)
(00) Occupant not seated or no seat
(01) Bucket
(02) Bucket with folding back
(03) Bench
(04) Bench with separate back cushions
(05) Bench with folding back(s)
(06) Split bench with separate back cushions
(07) Split bench with folding back(s)
(08) Pedestal (i.e., column supported)
(09) Box mounted seat (i.e., van type)
(10) Other seat type (specify):
_____
(99) Unknown

C-Seat Orientation (this Occupant Position)
(0) Occupant not seated or no seat
(1) Forward facing seat
(2) Rear facing seat
(3) Side facing seat (inward)
(4) Side facing seat (outward)
(8) Other (specify):
_____
(9) Unknown

D-Seat Track Adjusted Position Prior To Impact
(0) Occupant not seated or no seat
(1) Non-adjustable seat track

Adjustable Seat Track
(2) Seat at forward most track position
(3) Seat between forward most and middle track positions
(4) Seat at middle track position
(5) Seat between middle and rear most track positions
(6) Seat at rear most track position
(9) Unknown

E-Seat Back Incline Prior and Post Impact
(00) Occupant not seated or no seat
(01) Not adjustable

Upright prior to impact
(11) Moved to completely rearward position
(12) Moved to rearward midrange position
(13) Moved to slightly rearward position
(14) Retained pre-impact position
(15) Moved to slightly forward position
(16) Moved to forward midrange position
(17) Moved to completely forward position

Slightly reclined prior to impact
(21) Moved to completely rearward position
(22) Moved to rearward midrange position
(23) Retained pre-impact postion
(24) Moved to upright position
(25) Moved to slightly forward position
(26) Moved to forward midrange position
(27) Moved to completely forward position

Completely reclined prior to impact
(31) Retained pre-impact position
(32) Moved to rearward midrange position
(33) Moved to slightly rearward position
(34) Moved to upright position
(35) Moved to slightly forward position
(36) Moved to forward midrange position
(37) Moved to completely forward position

(99) Unknown

F-Seat Performance (this Occupant Position)
(0) Occupant not seated or no seat
(1) No seat performance failure(s)
(2) Seat adjusters failed
(3) Seat back folding locks or "seat back" failed (specify):
_____
(4) Seat tracks/anchors failed
(5) Deformed by impact of occupant
(6) Deformed by passenger compartment intrusion (specify):_____
(7) Combination of above (specify):
_____
(8) Other (specify):
_____
(9) Unknown

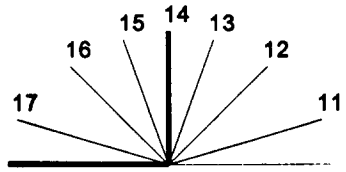

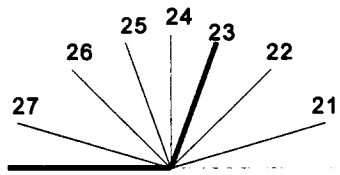

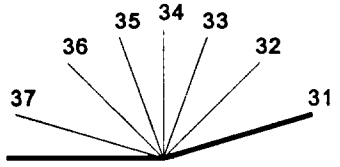

Coding diagrams for *Seat Back Incline Position Prior and Post Impact*

DESCRIBE ANY INDICATION OF ABNORMAL OCCUPANT POSTURE (I.E., UNUSUAL OCCUPANT CONTACT PATTERN)

CHILD SAFETY SEAT FIELD ASSESSMENT

When a child safety seat is present enter the occupant's number in the first row and complete the column below the occupant's number using the codes listed below. Complete a column for each child safety seat present.

Occupant Number						
1. Type of Child Safety Seat						
2. Child Safety Seat Orientation						
3. Child Safety Seat Harness Usage		NO				
4. Child Safety Seat Shield Usage						
5. Child Safety Seat Tether Usage						
6. Child Safety Seat Make/Model	Specify Below for Each Child Safety Seat					

1. Type of Child Safety Seat

   (0) No child safety seat
   (1) Infant seat
   (2) Toddler seat
   (3) Convertible seat
   (4) Booster seat
   (7) Other type child safety seat (specify): _____
   (8) Unknown child safety seat type
   (9) Unknown if child safety seat used

2. Child Safety Seat Orientation

   (00) No child safety seat

   Designed for Rear Facing for This Age/Weight
   (01) Rear facing
   (02) Forward facing
   (08) Other orientation (specify): _____
   (09) Unknown orientation

   Designed for Forward Facing for This Age/Weight
   (11) Rear facing
   (12) Forward facing
   (18) Other orientation (specify): _____
   (19) Unknown orientation

   Unknown Design or Orientation For This Age/Weight, or Unknown Age/Weight
   (21) Rear facing
   (22) Forward facing
   (28) Other orientation (specify): _____
   (29) Unknown orientation

   (99) Unknown if child safety seat used

3. Child Safety Seat Harness Usage

4. Child Safety Seat Shield Usage

5. Child Safety Seat Tether Usage
   Note: Options Below Are Used for Variables 3-5.

   (00) No child safety seat

   Not Designed with Harness/Shield/Tether
   (01) After market harness/shield/tether added, not used
   (02) After market harness/shield/tether used
   (03) Child safety seat used, but no after market harness/shield/tether added
   (09) Unknown if harness/shield/tether added or used

   Designed With Harness/Shield/Tether
   (11) Harness/shield/tether not used
   (12) Harness/shield/tether used
   (19) Unknown if harness/shield/tether used

   Unknown If Designed With Harness/Shield/Tether
   (21) Harness/shield/tether not used
   (22) Harness/shield/tether used
   (29) Unknown if harness/shield/tether used

   (99) Unknown if child safety seat used

6. Child Safety Seat Make/Model
   (Specify make/model and occupant number)

   _____
   _____
   _____
   _____

EJECTION/ENTRAPMENT DATA

Complete the following if the researcher has any indication that an occupant was either ejected from or entrapped in the vehicle. Code the appropriate data on the Occupant Assessment Form.

EJECTION No [ ] Yes [X]

Describe indications of ejection and body parts involved in partial ejection(s):

blood Torn clothing in vehicle suggests dragging along road

Occupant Number	1	2	3			
Ejection	2	2	1			
(Note on Vehicle Interior Sketch) Ejection Area	2	3	6			
Ejection Medium	4	4	3			
Medium Status	2	2	2			

Ejection
(1) Complete ejection
(2) Partial ejection
(3) Ejection, Unknown degree
(9) Unknown

Ejection Area
(1) Windshield
(2) Left front
(3) Right front
(4) Left rear
(5) Right rear
(6) Rear
(7) Roof
(8) Other area (e.g., back of pickup, etc.) (specify): _____
(9) Unknown

Ejection Medium
(1) Door/hatch/tailgate
(2) Nonfixed roof structure
(3) Fixed glazing
(4) Nonfixed glazing (specify): Closed side glass
(5) Integral structure
(8) Other medium (specify): _____
(9) Unknown

Medium Status (Immediately Prior to Impact)
(1) Open
(2) Closed
(3) Integral structure
(9) Unknown

ENTRAPMENT No [ ] Yes [X]

Describe entrapment mechanism: Came to rest on left side both left doors non-operative,

Component(s): _____

(Note on vehicle interior sketch)

U.S. Department of Transportation
National Highway Traffic Safety Administration

EXTERIOR VEHICLE FORM

NATIONAL ACCIDENT SAMPLING SYSTEM
CRASHWORTHINESS DATA SYSTEM

1. Primary Sampling Unit Number: 48	3. Vehicle Number: 01
2. Case Number - Stratum: 229K	

VEHICLE IDENTIFICATION

VIN JT3VN29V0M0[redacted] Model Year 91

Vehicle Make (specify): Toyota Vehicle Model (specify): 4 Runner

LOCATOR

Locate the end of the damage with respect to the vehicle's damaged center point or bumper corner for end impacts or an undamaged axle for side impacts.

Specific Impact No.	Location of Direct Damage	Location of Field L	Location of Max Crush
01	147cm From LF Bumper		L A-Pillar
	To LR Bumper		

CRUSH PROFILE IN CENTIMETERS

NOTES: Identify the plane at which the C-measurements are taken (e.g., at bumper, above bumper, at sill, above sill, etc.) and label adjustments (e.g., free space).

Measure C1 to C6 from driver to passenger side in front or rear impacts and rear to front in side impacts.

Free space value is defined as the distance between the baseline and the original body contour taken at the individual C locations. This may include the following: bumper lead, bumper taper, side protrusion, side taper, etc. Record the value for each C-measurement and maximum crush.

Use as many lines/columns as necessary to describe each damage profile.

Specific Impact Number	Plane of Impact C-Measurements	Direct Damage Width (CDC)	Direct Damage Max Crush	Field L	C_1	C_2	C_3	C_4	C_5	C_6	±D
1	Top	303	12	303		✓					

ORIGINAL SPECIFICATIONS WORK SHEET

Wheelbase	103.3	inches	x	2.54	=	262 cm
Overall Length	174.0	inches	x	2.54	=	447 cm
Maximum Width	60.2	inches	x	2.54	=	153 cm
Curb Weight	3,740	pounds	x	.4536	=	1,696 kg
Average Track	___	inches	x	2.54	=	___ cm
Front Overhang	___	inches	x	2.54	=	___ cm
Rear Overhang	___	inches	x	2.54	=	___ cm
Undeformed End Width	___	inches	x	2.54	=	___ cm
Engine Size: cyl./displ.	____	cc	x	.001	=	___ L
	___	CID	x	.0164	=	___ L

93 Track Indy

5,350

VEHICLE DAMAGE SKETCH

TIRE—WHEEL DAMAGE

a. Rotation physically restricted		b. Tire deflated	
RF	2	RF	1
LF	2	LF	1
RR	2	RR	2
LR	2	LR	1

(1) Yes (2) No (8) NA (9) Unk.

TYPE OF TRANSMISSION
☐ Manual ☒ Automatic

END SHIFT ≥ 10 CM
☐ Yes ☒ No

ORIGINAL SPECIFICATIONS

Wheelbase	262	cm
Overall Length	447	cm
Maximum Width	153	cm
Curb Weight	1696	kg
Average Track	135	cm
Front Overhang	76	cm
Rear Overhang	109	cm
Undeformed End Width	168	cm
Engine Size: cyl./displ.	2,4	L

WHEEL STEER ANGLES
(For locked front wheels or displaced rear axles only)
RF ± ___ ___ °
LF ± ___ ___ °
RR ± ___ ___ °
LR ± ___ ___ °
Within ± 5 degrees

DRIVE WHEELS
☐ FWD ☒ RWD ☐ 4WD

Approximate Cargo Weight 75 kg

MEASUREMENTS IN CENTIMETERS

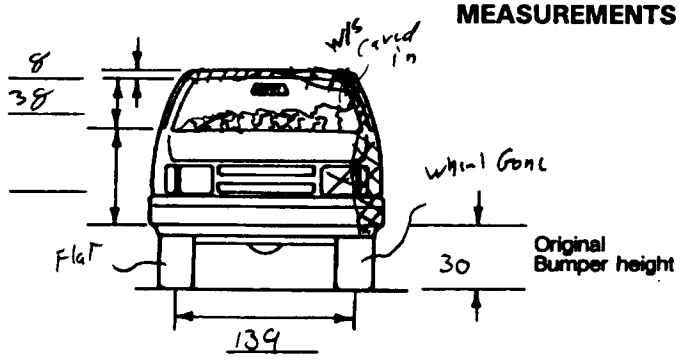

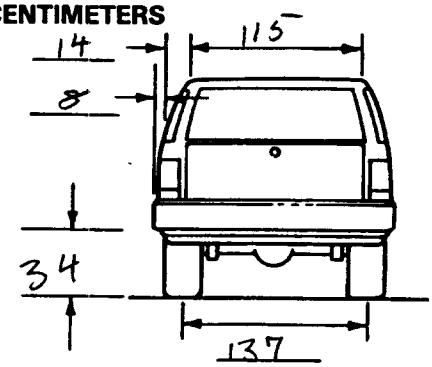

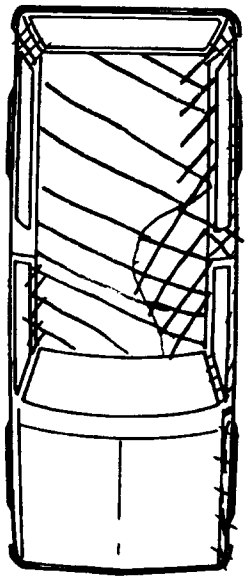

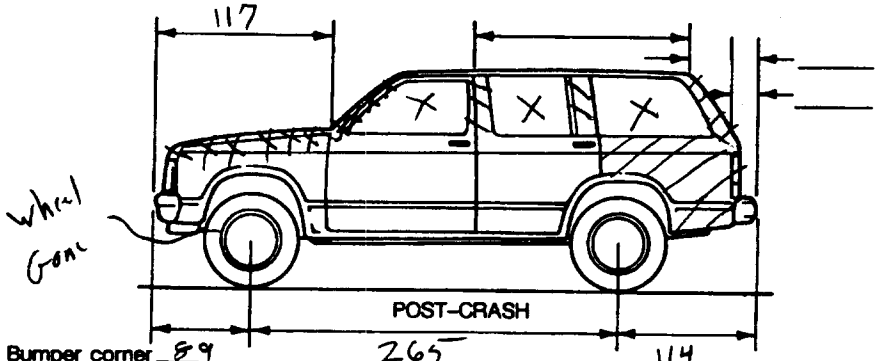

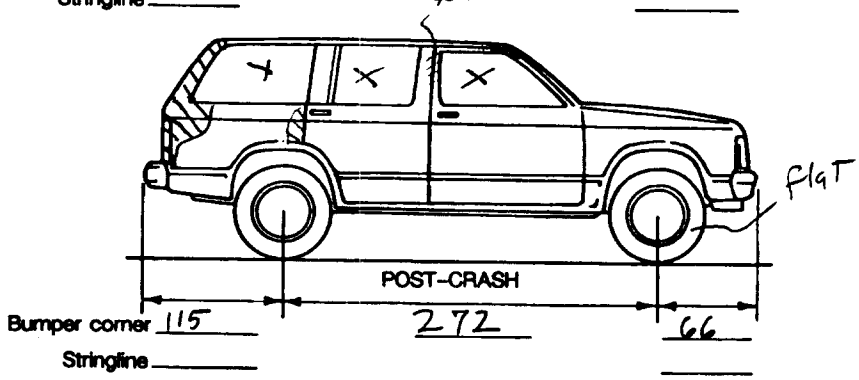

NOTES: Sketch new perimeter and cross hatch direct damage and single hatch induced damage on all views. Annotate observations which might be useful in reconstructing the accident (e.g., grass in tire bead, direction of striations, scuff on sidewalls, etc.). If pulling trailer, sketch type of trailer and damage received on the back of this page.
Annotate any damage caused by extrication such as component removal by torching, prying, or hydraulic shears.

☆U.S. GOVERNMENT PRINTING OFFICE: 1996 - [redacted]

CDC WORKSHEET

CODES FOR OBJECT CONTACTED

(01-30) — Vehicle Number

Noncollision
- (31) Overturn — rollover (excludes end-over-end)
- (32) Rollover—end-over-end
- (33) Fire or explosion
- (34) Jackknife
- (35) Other intraunit damage (specify): _____
- (36) Noncollision injury
- (38) Other noncollision (specify): _____
- (39) Noncollision — details unknown

Collision With Fixed Object
- (41) Tree (≤ 10 cm in diameter)
- (42) Tree (> 10 cm in diameter)
- (43) Shrubbery or bush
- (44) Embankment
- (45) Breakaway pole or post (any diameter)

Nonbreakaway Pole or Post
- (50) Pole or post (≤ 10 cm in diameter)
- (51) Pole or post (> 10 cm but ≤ 30 cm in diameter)
- (52) Pole or post (> 30 cm in diameter)
- (53) Pole or post (diameter unknown)
- (54) Concrete traffic barrier
- (55) Impact attenuator
- (56) Other traffic barrier (includes guardrail) (specify): _____
- (57) Fence
- (58) Wall
- (59) Building
- (60) Ditch or culvert
- (61) Ground
- (62) Fire hydrant
- (63) Curb
- (64) Bridge
- (68) Other fixed object (specify): _____
- (69) Unknown fixed object

Collision with Nonfixed Object
- (70) Passenger car, light truck, van, or other vehicle not in-transport
- (71) Medium/heavy truck or bus not in-transport
- (72) Pedestrian
- (73) Cyclist or cycle
- (74) Other nonmotorist or conveyance
- (75) Vehicle occupant
- (76) Animal
- (77) Train
- (78) Trailer, disconnected in transport
- (79) Object fell from vehicle in-transport
- (88) Other nonfixed object (specify): _____
- (89) Unknown nonfixed object
- (98) Other event (specify): _____
- (99) Unknown event or object

DEFORMATION CLASSIFICATION BY EVENT NUMBER

Accident Event Sequence Number	Object Contacted	(1) (2) Direction of Force (degrees)	Incremental Value of Shift	(3) Deformation Location	(4) Specific Longitudinal or Lateral Location	(5) Specific Vertical or Lateral Location	(6) Type of Damage Distribution	(7) Deformation Extent
01	31	000	00	T	D	RD	0	03

COLLISION DEFORMATION CLASSIFICATION

HIGHEST DELTA "V"

Accident Event Sequence Number	Object Contacted	(1) (2) Direction of Force	(3) Deformation Location	(4) Longitudinal or Lateral Location	(5) Vertical or Lateral Location	(6) Type of Damage Distribution	(7) Deformation Extent
4. 01	5. 31	6. 00	7. T	8. D	9. D	10. 0	11. 03

Second Highest Delta "V"

12.	13.	14.	15.	16.	17.	18.	19.

CRUSH PROFILE IN CENTIMETERS

The crush profile for the damage described in the CDC(s) above should be documented in the appropriate space below. (ALL MEASUREMENTS ARE IN CENTIMETERS.)

HIGHEST DELTA "V"

20. L	21. C_1	C_2	C_3	C_4	C_5	C_6	22. ±D
							+ −

Second Highest Delta "V"

23. L	24. C_1	C_2	C_3	C_4	C_5	C_6	25. ±D
							+ −

26. Undeformed End Width (Coded when highest severity impact is an end plane impact.) 998
- ____ Code to the nearest centimeter
- (250) 250 centimeters or more
- (998) No highest severity end plane impact
- (999) Unknown

27. Direct Damage Width (For highest severity impact) 250
- 303 Code to the nearest centimeter
- (250) 250 centimeters or more
- (999) Unknown

28. Original Wheelbase 265
- ____ Code to the nearest centimeter
- (650) 650 centimeters or more
- (999) Unknown

___ . __ inches X 2.54 = ___ centimeters

29. Original Average Track Width 138
- ____ Code to the nearest centimeter
- (185) 185 centimeters or more
- (999) Unknown

___ . __ inches X 2.54 = ___ centimeters

30. Are CDCs Documented but Not Coded on The Automated File? 0
(0) No
(1) Yes

31. Researcher's Assessment of Vehicle Disposition 1
(0) Not towed due to vehicle damage
(1) Towed due to vehicle damage
(9) Unknown

32. Is This A Multi-Stage Manufactured Vehicle And/Or A Certified Altered Vehicle? 0
(0) No post manufacturer modifications
(1) Yes - post manufacturer modifications (specify): _____
_____
_____
(Include photograph of CERTIFICATION PLACARD in case report)
(9) Unknown if vehicle is modified

FIRE OCCURRENCE

33. Fire Occurrence 0
(0) No fire

Yes, fire occurred
(1) Minor
(2) Major
(9) Unknown

34. Origin of Fire 0
(0) No fire
(1) Vehicle exterior (front, side, back, top)
(2) Exhaust system
(3) Fuel tank (and other fuel retention system parts)
(4) Engine compartment
(5) Cargo/trunk compartment
(6) Instrument panel
(7) Passenger compartment area
(8) Other location (specify):
_____
(9) Unknown

FUEL SYSTEM

35. Location of Fuel Tank-1 Filler Cap 7

36. Location of Fuel Tank-2 Filler Cap 6
(0) No fuel tank
(1) On back plane
(2) Aft of center of the rear wheels (rear axle) on left side plane
(3) Aft of center of the rear wheels (rear axle) on right side plane
(4) Forward of center of the rear wheels (rear axle) on left side plane
(5) Forward of center of the rear wheels (rear axle) on right side plane
(6) Over the center of the rear wheels (rear axle) on left side plane
(7) Over the center of the rear wheels (rear axle) on right side plane
(8) Other (specify):_____
(9) Unknown

37. Type of Fuel Tank-1 1

38. Type of Fuel Tank-2 0
(0) No fuel tank (electrical vehicle)
(1) Metallic
(2) Non-metallic
(9) Unknown

39. Location of Fuel Tank-1 6

40. Location of Fuel Tank-2 0
(0) No fuel tank
(1) Aft of center of the rear wheels (rear axle) centered
(2) Aft of center of the rear wheels (rear axle) left side
(3) Aft of center of the rear wheels (rear axle) right side
(4) Forward of center of the rear wheels (rear axle) centered
(5) Forward of center of the rear wheels (rear axle) left side
(6) Forward of center of the rear wheels (rear axle) right side
(7) Over center of the rear wheels (rear axle)
(8) Other (specify):_____
(9) Unknown

41. Damage to Fuel Tank-1 1

42. Damage to Fuel Tank-2 6
(0) No fuel tank
(1) No damage to fuel tank
(2) Deformed, no seam failure
(3) Deformed, with a seam failure
(4) Punctured
(5) Lacerated (ripped)
(6) Abraded (scraped)
(7) Filler neck separation from the fuel tank
(8) Other damage (specify):_____
(9) Unknown

43. Leakage Location of Fuel System-1 1

44. Leakage Location of Fuel System-2 0
(0) No fuel tank
(1) No fuel leakage

Primary Area Of Leakage
(2) Tank
(3) Filler neck
(4) Cap
(5) Lines/pump/filter
(6) Vent/emission recovery
(8) Other (specify):_____
(9) Unknown

45. Fuel Type-1 0 1

46. Fuel Type-2 0 6

Single Fuel Type
(00) No fuel tank
(01) Gasoline
(02) Diesel
(03) CNG (Compressed Natural Gas)
(04) LPG (Liquid Petroleum Gas) also known as Propane
(05) LNG (Liquid Natural Gas)
(06) Methanol (M100 or M85)
(07) Ethanol (E100 or E85)
(08) Other (Hydrogen or others) (specify):
_____

Electric Powered or Electric/Solar Powered Vehicles
(10) Lead Acid Battery
(11) Nickel-Iron Battery
(12) Nickel-Cadmium Battery
(13) Sodium Metal Chloride Battery
(14) Sodium Sulfur Battery
(18) Other (Specify):_____

(98) Other Hybrid (specify):
_____

(99) Unknown fuel type

47. Is This Vehicle Equipped With More Than Two Fuel Tanks? 0
(0) No (one or two tanks only)

Yes - More Than Two Tanks
(1) Yes -- no damage to any tank or filler cap and no fuel system leakage
(2) Yes -- no damage to any tank or filler cap but there is fuel system leakage (specify leakage location):
_____
(3) Yes -- damage to an additional tank or filler cap and there is fuel system leakage (specify the following):
Type of tank _____
Tank location _____
Filler cap location _____
Tank damage _____
Location of leakage _____
Type of fuel _____
(9) Unknown if more than two tanks

COMMENTS

_____
_____
_____
_____
_____
_____
_____
_____
_____
_____
_____

*** STOP: IF THE CDS APPLICABLE VEHICLE WAS NOT TOWED ***

(GV10=0)

DO NOT COMPLETE THE INTERIOR VEHICLE FORM.

U.S. Department of Transportation
National Highway Traffic Safety Administration

OCCUPANT ASSESSMENT FORM

Form Approved
O.M.B. No. 2127-0021

NATIONAL ACCIDENT SAMPLING SYSTEM
CRASHWORTHINESS DATA SYSTEM

1. Primary Sampling Unit Number: 4 8
2. Case Number - Stratum: 2 2 9 K
3. Vehicle Number: 0 1
4. Occupant Number: 0 1

OCCUPANT'S CHARACTERISTICS

5. Occupant's Age: 2 7
Code actual age at time of accident.
(00) Less than one year old (specify by month): _____
(97) 97 years and older
(99) Unknown

6. Occupant's Sex: 2
(1) Male
(2) Female-not reported pregnant
(3) Female-pregnant-1st trimester(1st-3rd month)
(4) Female-pregnant-2nd trimester(4th-6th month)
(5) Female-pregnant-3rd trimester(7th-9th month)
(6) Female-pregnant-term unknown
(9) Unknown

7. Occupant's Height: 1 9 0
Code actual height to the nearest centimeter.
(999) Unknown

6 7 inches X 2.54 = 1 7 0 centimeters

8. Occupant's Weight: 0 5 7
Code actual weight to the nearest kilogram.
(999) Unknown

1 2 5 pounds X .4536 = 0 5 7 kilograms

9. Occupant's Role: 1
(1) Driver
(2) Passenger
(9) Unknown

OCCUPANT'S SEATING

10. Occupant's Seat Position: 1 1
Front Seat
(11) Left side
(12) Middle
(13) Right side
(14) Other (specify): _____
(15) On or in the lap of another occupant

Second Seat
(21) Left side
(22) Middle
(23) Right side
(24) Other (specify): _____
(25) On or in the lap of another occupant

Third Seat
(31) Left side
(32) Middle
(33) Right side
(34) Other (specify): _____
(35) On or in the lap of another occupant

Fourth Seat
(41) Left side
(42) Middle
(43) Right side
(44) Other (specify): _____
(45) On or in the lap of another occupant

(97) In or on unenclosed area
(98) Other seat (specify): _____
(99) Unknown

11. Occupant's Posture: 0
(0) Normal posture

Abnormal posture
(1) Kneeling or standing on seat
(2) Lying on or across seat
(3) Kneeling, standing or sitting in front of seat
(4) Sitting sideways or turned to talk with another occupant or to look out a rear window
(5) Sitting on a console
(6) Lying back in a reclined seat position
(7) Bracing with feet or hands on a surface in front of seat
(8) Other abnormal posture (specify): _____
(9) Unknown

This report is authorized by P.L. 89-563, Title 1, Section 106, 108, and 112. While you are not required to respond, your cooperation is needed to make the results of this data collection effort comprehensive, accurate, and timely.

EJECTION/ENTRAPMENT

12. Ejection 0
    (0) No ejection
    (1) Complete ejection
    (2) Partial ejection
    (3) Ejection, unknown degree
    (9) Unknown

13. Ejection Area 0
    (0) No ejection
    (1) Windshield
    (2) Left front
    (3) Right front
    (4) Left rear
    (5) Right rear
    (6) Rear
    (7) Roof
    (8) Other area (e.g., back of pickup, etc.) (specify):_____
    (9) Unknown

14. Ejection Medium 0
    (0) No ejection
    (1) Door/hatch/tailgate
    (2) Nonfixed roof structure
    (3) Fixed glazing
    (4) Nonfixed glazing (specify): Side glass
    (5) Integral structure
    (8) Other medium (specify):_____
    (9) Unknown

15. Medium Status (Immediately Prior To Impact) 0
    (0) No ejection
    (1) Open
    (2) Closed
    (3) Integral structure
    (9) Unknown

16. Entrapment 0
    (0) Not entrapped/exit not inhibited
    (1) Entrapped/pinned - mechanically restrained
    (2) Could not exit vehicle due to jammed doors, fire, etc. (specify):_____
    (9) Unknown

17. Occupant Mobility 4
    (0) Occupant fatal before removed from vehicle
    (1) Removed from vehicle while unconscious or not oriented to time or place
    (2) Removed from vehicle due to perceived serious injuries
    (3) Exited vehicle with some assistance
    (4) Exited vehicle under own power
    (5) Occupant fully ejected
    (8) Removed from vehicle for other reasons (specify):_____
    (9) Unknown

BELT SYSTEM FUNCTION

18. Manual (Active) Belt System Availability 4
(0) None available
(1) Belt removed/destroyed
(2) Shoulder belt
(3) Lap belt
(4) Lap and shoulder belt
(5) Belt available—type unknown

Integral Belt Partially Destroyed
(6) Shoulder belt (lap belt destroyed/removed)
(7) Lap belt (shoulder belt destroyed/removed)
(8) Other belt (specify):

(9) Unknown

19. Manual (Active) Belt System Use 0 4
(00) None used, not available, or belt removed/destroyed
(01) Inoperative (specify):

(02) Shoulder belt
(03) Lap belt
(04) Lap and shoulder belt
(05) Belt used—type unknown
(08) Other belt used (specify):

(12) Shoulder belt used with child safety seat
(13) Lap belt used with child safety seat
(14) Lap and shoulder belt used with child safety seat
(15) Belt used with child safety seat—type unknown
(18) Other belt used with child safety seat (specify):
(99) Unknown if belt used

20. Proper Use of Manual (Active) Belts 1
(0) None used or not available
(1) Belt used properly
(2) Belt used properly with child safety seat

Belt Used Improperly
(3) Shoulder belt worn under arm
(4) Shoulder belt worn behind back or seat
(5) Belt worn around more than one person
(6) Lap belt worn on abdomen
(7) Lap belt or lap and shoulder belt used improperly with child safety seat (specify):

(8) Other improper use of manual belt system (specify):

(9) Unknown

21. Manual (Active) Belt Failure Modes During Accident 1
(0) No manual belt used or not available
(1) No manual belt failure(s)
(2) Torn webbing (stretched webbing not included)
(3) Broken buckle or latchplate
(4) Upper anchorage separated
(5) Other anchorage separated (specify):

(6) Broken retractor
(7) Combination of above (specify):

(8) Other manual belt failure (specify):

(9) Unknown

22. Manual Shoulder Belt Upper Anchorage Adjustment 1
(0) No manual shoulder belt
(1) No upper anchorage adjustment for manual shoulder belt

Adjustable shoulder Belt Upper Anchorage
(2) In full up position
(3) In mid position
(4) In full down position
(5) Position unknown
(9) Unknown if position has adjustable upper anchorage adjustment

23. Automatic (Passive) Belt System Availability/ Function 0
(0) Not equipped/not available
(1) 2 point automatic belts
(2) 3 point automatic belts
(3) Automatic belts - type unknown

Non-functional
(4) Automatic belts destroyed or rendered inoperative
(9) Unknown

24. Automatic (Passive) Belt System Use 0
(0) Not equipped/not available/destroyed or rendered inoperative
(1) Automatic belt in use
(2) Automatic belt not in use (manually disconnected, motorized track inoperative) (specify):
(3) Automatic belt use unknown
(9) Unknown

25. Automatic (Passive) Belt System Type 0
(0) Not equipped/not available
(1) Non-motorized system
(2) Motorized system
(9) Unknown

26. Proper Use of Automatic (Passive) Belt System 0
(0) Not equipped/not available/not used
(1) Automatic belt used properly
(2) Automatic belt used properly with child safety seat

Automatic Belt Used Improperly
(3) Automatic shoulder belt worn under arm
(4) Automatic shoulder belt worn behind back
(5) Automatic belt worn around more than one person
(6) Lap portion of automatic belt worn on abdomen
(7) Automatic lap and shoulder belt or automatic shoulder belt used improperly with child safety seat (specify):

(8) Other improper use of automatic belt system (specify):
(9) Unknown

27. Automatic (Passive) Belt Failure Modes During Accident 0
(0) Not equipped/not available/not in use
(1) No automatic belt failure(s)
(2) Torn webbing (stretched webbing not included)
(3) Broken buckle or latchplate
(4) Upper anchorage separated
(5) Other anchorage separated (specify):

(6) Broken retractor
(7) Combination of above (specify):
(8) Other automatic belt failure (specify):

(9) Unknown

POLICE REPORTED RESTRAINT USE

28. Police Reported Belt Use 4
    (0) None used
    (1) Police did not indicate belt use
    (2) Shoulder belt
    (3) Lap belt
    (4) Lap and shoulder belt
    (5) Belt used, type not specified
    (6) Child safety seat
    (7) Automatic belt
    (8) Other type belt, (specify):

    _____

    (9) Police indicated "unknown"

29. Police Reported Air Bag Availability/Function 1
    (0) No air bag available
    (1) Police did not indicate air bag availability/function
    (2) Deployed
    (3) Not deployed
    (4) Unknown if deployed
    (9) Police indicated "unknown"

Check the Primary Source Used In Determining Belt Use.

[Y] Vehicle inspection
[ ] Official injury data
[ ] Driver/occupant interview
[ ] Other (specify):

_____

[ ] Unknown if belt used

_____

_____

_____

_____

AIR BAG SYSTEM FUNCTION

30. Frontal Air Bag System Availability/Function (This Occupant Position) 0
    (0) Not equipped/not available
    (1) Air bag

    Non-functional
    (2) Air bag disconnected (specify):

    _____

    (3) Air bag not reinstalled
    (9) Unknown

31. Frontal Air Bag System Deployment (This Occupant Position) 0
    (0) Not equipped/not available
    (1) Deployed during accident (as a result of impact)
    (2) Deployed inadvertently just prior to accident
    (3) Deployed, details unknown
    (4) Deployed as a result of a noncollision event during accident sequence (e.g., fire, explosion, electrical)
    (5) Unknown if deployed
    (7) Nondeployed
    (9) Unknown

32. Other Than First Seat Frontal Air Bag Availability/Function (This Occupant Position) 0
    (0) Not equipped/not available
    (1) Air bag

    Non-functional
    (2) Air bag disconnected (specify):

    _____

    (3) Air bag not reinstalled
    (9) Unknown

    Specify type of "other" air bag present:

    _____

33. Air Bag(s) Deployment, Other Than First Seat Frontal (This Occupant Position) 0
    (0) Not equipped with an "other" air bag
    (1) Deployed during accident (as a result of impact)
    (2) Deployed inadvertently just prior to accident
    (3) Deployed, details unknown
    (4) Deployed as a result of a noncollision event during accident sequence (e.g., fire, explosion, electrical)
    (5) Unknown if deployed
    (7) Nondeployed
    (9) Unknown

34. Are There Indications of Air Bag System Failure? (This Occupant Position) 0
    (0) Not equipped/not available
    (1) No
    (2) Yes (specify):

    _____

    (9) Unknown

FIRST SEAT FRONTAL AIR BAG SYSTEM EVALUATION

35. Had Vehicle Been in Previous Accident(s)? 0
(0) Not equipped/not available
(1) No previous accidents

Yes
(2) Previous accident(s) without deployment(s)
(3) One previous accident with deployment
(4) More than one previous accident with at least one deployment
(8) Previous accidents, unknown deployment status
(9) Unknown

36. Type of Air Bag 0
(0) Not equipped/not available
(1) Original manufacturer installed system
(2) Retrofitted air bag
(3) Replacement air bag
(8) Unknown type of air bag
(9) Unknown

37. Had Any Prior Maintenance/Service Been Performed On This Air Bag System? 0
(0) Not equipped/not available
(1) No prior maintenance
(2) Yes, prior maintenance (specify): _____
(9) Unknown

38. Air Bag Deployment Accident Event Sequence Number 0 0
(00) Not equipped/not available
_____ Code the accident event sequence number that initiated the air bag deployment
(96) Deployed, unknown event
(97) Not deployed
(98) Unknown if deployed
(99) Unknown

39. CDC For Air Bag Deployment Impact 0
(0) Not equipped/not available
(1) Highest delta V
(2) Second highest delta V
(3) Other non-coded delta V (specify): _____
(6) Deployed, unknown event
(7) Not deployed
(8) Unknown if deployed
(9) Unknown

40. Longitudinal Component of Delta V For Air Bag Deployment Impact + - 0 0 0
(_000) Not equipped/not available
Code the value of the delta V for the impact that initiated the air bag deployment
(_996) Deployment, unknown longitudinal Delta V
(_997) Not deployed
(_998) Unknown if deployed
(_999) Unknown

41. Did Air Bag Module Cover Flap(s) Open At Designated Tear Points? 0
(0) Not equipped/not available
(1) No
(2) Yes
(3) Deployed, unknown if flap(s) opened at designated tear points
(7) Not deployed
(8) Unknown if deployed
(9) Unknown

42. Were Air Bag Module Cover Flap(s) Damaged? 0
(0) Not equipped/not available
(1) No
(2) Yes (specify): _____
(3) Deployed, unknown if air bag module cover flap(s) damaged
(7) Not deployed
(8) Unknown if deployed
(9) Unknown

43. Was There Damage To The Air Bag? 0 0
(00) Not equipped/not available
(01) Not damaged

Yes - Air Bag Damage
(02) Ruptured
(03) Cut
(04) Torn
(05) Holed
(06) Burned
(07) Abraded
(88) Other damage (specify): _____
(95) Damaged, details unknown
(96) Deployed, unknown if damaged
(97) Not deployed
(98) Unknown if deployed
(99) Unknown

FIRST SEAT FRONTAL AIR BAG SYSTEM EVALUATION *continued*

44. Source of Air Bag Damage 0 0
(00) Not equipped/not available
(01) Not damaged
(02) Object worn by occupant, (specify):
(03) Object carried by occupant, (specify):
(04) Adaptive/assistive controls, (specify):
(05) Fire in vehicle
(06) Thermal burns
(07) Rescue or emergency efforts
(88) Other damage source (specify):
(95) Damaged, unknown source
(96) Deployed, unknown if damaged
(97) Not deployed
(98) Unknown if deployed
(99) Unknown

45. Was The Air Bag Tethered? 0
(0) Not equipped/not available
(1) No
(2) Yes (specify number of tether straps):
(3) Deployed, unknown if tethered
(7) Not deployed
(8) Unknown if deployed
(9) Unknown

46. Did The Air Bag Have Vent Ports? 0
(0) Not equipped/not available
(1) No
(2) Yes (specify number of vent ports):
(3) Deployed, unknown if vent ports present
(7) Not deployed
(8) Unknown if deployed
(9) Unknown

47. Was the Air Bag in this Occupant's Position Contacted by Another Occupant? 0
(0) Not equipped/not available
(1) No
(2) Yes (specify):
(3) Deployed, unknown if other occupant contact to air bag
(7) Not deployed
(8) Unknown if deployed
(9) Unknown

48. Was This Occupant Wearing Eye-wear? 0
(0) Not air bag equipped/air bag not available
(1) No
(2) Eyeglasses/sunglasses
(3) Contact lenses
(4) Deployed, unknown if eyewear worn
(7) Not deployed
(8) Unknown if deployed
(9) Unknown

HEAD RESTRAINT AND SEAT EVALUATION

49. Head Restraint Type/Damage by Occupant at This Occupant Position 3
(0) No head restraints
(1) Integral—no damage
(2) Integral—damaged during accident
(3) Adjustable—no damage
(4) Adjustable—damaged during accident
(5) Add-on—no damage
(6) Add-on—damaged during accident
(8) Other (specify):
(9) Unknown

50. Seat Type (this Occupant Position) 0 1
(00) Occupant not seated or no seat
(01) Bucket
(02) Bucket with folding back
(03) Bench
(04) Bench with separate back cushions
(05) Bench with folding back(s)
(06) Split bench with separate back cushions
(07) Split bench with folding back(s)
(08) Pedestal (i.e., column supported)
(09) Box mounted seat (i.e., van type)
(10) Other seat type (specify):
(99) Unknown

51. Seat Orientation (this Occupant Position) 1
(0) Occupant not seated or no seat
(1) Forward facing seat
(2) Rear facing seat
(3) Side facing seat (inward)
(4) Side facing seat (outward)
(8) Other (specify):
(9) Unknown

52. Seat Track Adjusted Position Prior To Impact 6
(0) Occupant not seated or no seat
(1) Non-adjustable seat track

Adjustable Seat Track
(2) Seat at forward most track position
(3) Seat between forward most and middle track positions
(4) Seat at middle track position
(5) Seat between middle and rear most track positions
(6) Seat at rear most track position
(9) Unknown

HEAD RESTRAINT AND SEAT EVALUATION *continued*

53. Seat Back Incline Prior and Post Impact 2 3
(00) Occupant not seated or no seat
(01) Not adjustable

Upright prior to impact
(11) Moved to completely rearward position
(12) Moved to rearward midrange position
(13) Moved to slightly rearward position
(14) Retained pre-impact position
(15) Moved to slightly forward position
(16) Moved to forward midrange position
(17) Moved to completely forward position

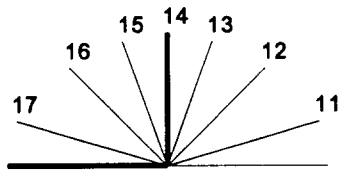

Slightly reclined prior to impact
(21) Moved to completely rearward position
(22) Moved to rearward midrange position
(23) Retained pre-impact position
(24) Moved to upright position
(25) Moved to slightly forward position
(26) Moved to forward midrange position
(27) Moved to completely forward position

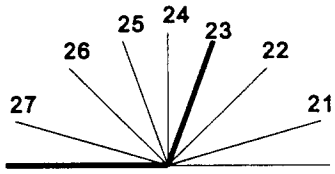

Completely reclined prior to impact
(31) Retained pre-impact position
(32) Moved to rearward midrange position
(33) Moved to slightly rearward position
(34) Moved to upright position
(35) Moved to slightly forward position
(36) Moved to forward midrange position
(37) Moved to completely forward position

(99) Unknown

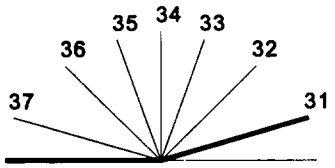

54. Seat Performance (this Occupant Position) 1
(0) Occupant not seated or no seat
(1) No seat performance failure(s)
(2) Seat adjusters failed
(3) Seat back folding locks or "seat back" failed (specify):_____
(4) Seat track/anchors failed
(5) Deformed by impact of occupant
(6) Deformed by passenger compartment intrusion, (specify):_____
_____
(7) Combination of above (specify):
_____
(8) Other (specify): _____
(9) Unknown

CHILD SAFETY SEAT

55. Child Safety Seat Make/Model 0 0 0
(000) No child safety seat
Applicable codes are found in your NASS CDS Data Collection, Coding and Editing
(950) Built-in child safety seat
(997) Other make/model (specify):
_____
(998) Unknown make/model
(999) Unknown if child safety seat used

56. Type of Child Safety Seat 0
(0) No child safety seat
(1) Infant seat
(2) Toddler seat
(3) Convertible seat
(4) Booster seat - with shield
(5) Booster seat - without shield
(7) Other type child safety seat (specify):
_____
(8) Unknown child safety seat type
(9) Unknown if child safety seat used

57. Child Safety Seat Orientation 0 0
(00) No child safety seat

Designed for Rear Facing for This Age/Weight
(01) Rear facing
(02) Forward facing
(08) Other orientation (specify):
_____
(09) Unknown orientation

Designed For Forward Facing for This Age/Weight
(11) Rear facing
(12) Forward facing
(18) Other orientation (specify):
_____
(19) Unknown orientation

Unknown Design or Orientation For This Age/Weight, or Unknown Age/Weight
(21) Rear facing
(22) Forward facing
(28) Other orientation (specify):
_____
(29) Unknown orientation

(99) Unknown if child safety seat used

58. Child Safety Seat Harness Usage 0 0

59. Child Safety Seat Shield Usage 0 0

60. Child Safety Seat Tether Usage 0 0

Note: Options below applicable to Variables OA58-OA60.
(00) No child safety seat

Not Designed With Harness/Shield/Tether
(01) After market harness/shield/tether added, not used
(02) After market harness/shield/tether used
(03) Child safety seat used, but no after market harness/shield/tether added
(09) Unknown if harness/shield/tether added or used

Designed With Harness/Shield/Tether
(11) Harness/shield/tether not used
(12) Harness/shield/tether used
(19) Unknown if harness/shield/tether used

Unknown If Designed With Harness/Shield/Tether
(21) Harness/shield/tether not used
(22) Harness/shield/tether used
(29) Unknown if harness/shield/tether used

(99) Unknown if child safety seat used

INJURY CONSEQUENCES

61. Injury Severity (Police Rating) 3

(0) O - No injury
(1) C - Possible injury
(2) B - Nonincapacitating injury
(3) A - Incapacitating injury
(4) K - Killed
(5) U - Injury, severity unknown
(6) Died prior to accident
(9) Unknown

62. Treatment - Mortality 3

(0) No treatment
(1) Fatal
(2) Fatal - ruled disease (specify):

_____

Nonfatal
(3) Hospitalization
(4) Transported and released
(5) Treatment at scene - nontransported
(6) Treatment later
(7) Treatment - other (specify):

_____

(8) Transported to a medical facility-unknown if treated
(9) Unknown

63. Type Of Medical Facility (for Initial Treatment) 1

(0) Not treated at a medical facility
(1) Trauma center
(2) Hospital
(3) Medical clinic
(4) Physician's office
(5) Treatment later at medical facility
(8) Other (specify):

_____

(9) Unknown

64. Hospital Stay 0 5

(00) Not Hospitalized
____Code the number of days (up through 60) that the occupant stayed in hospital.
(61) 61 days or more
(99) Unknown

65. Working Days Lost 0 9

____Code the number of days (up through 60) that the occupant lost from work due to the accident
(00) No working days lost
(61) 61 days or more
(62) Fatally injured
(97) Not working prior to accident
(99) Unknown

EMERGENCY RESPONSE INFORMATION

EMS Notification
(1) Not notified
(2) Notified
(9) Unknown

EMS NotificationTime (first unit)
(9999) Unknown

EMS Arrival Time (first unit)
(9998) EMS cancelled or did not arrive
(9999) Unknown

EMS Departure Time To Treatment Facility (transporting unit)
(9997) EMS arrived, provided treatment, but did not transport
(9998) EMS arrived, but was not used
(9999) Unknown

EMS Arrival Time At Treatment Facility
(9999) Unknown

ROAD VEHICLE / AIR VEHICLE

EMS Type
(01) Fire department
(02) Rescue squad
(03) Police department
(04) Trauma unit
(05) Disaster unit
(06) Ambulance service unit
(07) Hospital
(08) Mortuaries/funeral homes
(98) Other, specifiy: _____
(99) Unknown

FIRST UNIT / TRANSPORTING UNIT

EMS Care
(01) No care administered
(02) First aid
(03) Resuscitation
(04) CPR
(05) Emergency cardiac care
(06) Life support system monitoring (blood pressure, pulse rate, respiration, EKG)
(07) Emergency burn care
(08) Combination of above, specify: _____
(98) Other, specify: _____
(99) Unknown

ON-SCENE / DURING TRANSPORT

STOP WORK HERE VARIABLES 66-74 TO BE CODED BY THE ZONE CENTER

TO BE CODED BY THE ZONE CENTER

INJURY CONSEQUENCES

66. Time to Death — 00
____Code number of hours from time of accident to time of death up through 24 hours. If time of death is greater than 24 hours, code number of days. (Note: 1 day = 31, 2 days = 32, ... n days = 30 +n up through 30 days = 60)
(00) Not fatal
(96) Fatal - ruled disease
(99) Unknown

67. 1st Medically Reported Cause of Death — 00

68. 2nd Medically Reported Cause of Death — 00

69. 3rd Medically Reported Cause of Death — 00
____Code the Occupant Injury from line number(s) for the medically reported injury(s) which reportedly contributed to this occupant's death
(00) Not fatal or no additional causes
(96) Mode of death given but specific injuries are not linked to cause of death. (specify):
(97) Other result (includes fatal ruled disease) (specify):
(99) Unknown

70. Number of Recorded Injuries for This Occupant — 07
____Code the actual number of injuries recorded for this occupant.
(00) No recorded injuries
(97) Injured, details unknown
(99) Unknown if injured

TRAUMA DATA

71. Glasgow Coma Scale (GCS) Score (at Medical Facility) — 15
(00) Not injured
(01) Injured - not treated at medical facility
(02) No GCS Score at medical facility
(03-15) Code the actual value of the initial GCS Score recorded at medical facility.
(97) Injured, details unknown
(99) Unknown if injured

72. Was the Occupant Given Blood? — 1
(1) No - blood not given
(2) Yes - blood given
(specify units):
(9) Unknown if blood given

73. Arterial Blood Gases (ABG) - HCO_3 — 01
(00) Not injured
(01) Injured, ABGs not measured or reported
(02-50) Code the actual value of the HCO_3
(96) ABGs reported , HCO_3 unknown
(97) Injured, details unknown
(99) Unknown if injured

BELT USE DETERMINATION

74. Primary Source of Belt Use Determination — 1
(0) Not equipped/not available/destroyed or rendered inoperative
(1) Vehicle inspection
(2) Official injury data
(3) Driver/occupant interview
(8) Other (specify):
(9) Unknown if belt used

U.S. Department of Transportation
National Highway Traffic Safety Administration

OCCUPANT INJURY FORM

Form Approved
O.M.B. No. 2127-0021
NATIONAL ACCIDENT SAMPLING SYSTEM
CRASHWORTHINESS DATA SYSTEM

1. Primary Sampling Unit Number	48	3. Vehicle Number	01
2. Case Number - Stratum	2294	4. Occupant Number	01

INJURY DATA

Record below the actual injuries sustained by this occupant that were identified from the official and unofficial data sources. Remember not to double count an injury just because it was identified from two different sources. If greater than ten injuries have been documented, encode the balance on the Occupant Injury Supplement.

	Source of Injury Data	A.I.S. - 90 Body Region	Type of Anatomic Structure	Specific Anatomic Structure	Level of Injury	A.I.S. Severity	Aspect	Injury Source	Injury Source Confidence Level	Direct/ Indirect Injury	Occupant Area Intrusion Number
1st	5. 2	6. 1	7. 4	8. 06	9. 52	10. 4	11. 1	12. 205	13. 2	14. 1	15. 05
2nd	16. 2	17. 1	18. 4	19. 06	20. 84	21. 3	22. L	23. 205	24. 2	25. 1	26. 05
3rd	27. 2	28. 1	29. 9	30. 04	31. 02	32. 1	33. 2	34. 205	35. 2	36. 1	37. 05
4th	38. 2	39. 1	40. 9	41. 02	42. 02	43. 1	44. 2	45. 205	46. 2	47. 1	48. 05
5th	49. 2	50. 2	51. 9	52. 74	53. 02	54. 1	55. 2	56. 205	57. 2	58. 1	59. 05
6th	60. 2	61. 7	62. 9	63. 06	64. 02	65. 1	66. 2	67. 602	68. 2	69. 3	70. 00
7th	71. 2	72. 8	73. 9	74. 02	75. 02	76. 1	77. 2	78. 010	79. 1	80. 1	81. 00
8th	82. 2	83. 1	84. 6	85. 02	86. 02	87. 2	88. 0	89. 205	90. 2	91. 1	92. 05
9th	93. __	94. __	95. __	96. __	97. __	98. __	99. __	100. ____	101. __	102. __	103. __
10th	104. __	105. __	106. __	107. __	108. __	109. __	110. __	111. ____	112. __	113. __	114. __

This report is authorized by P.L. 89-563, Title 1, Section 106, 108, and 112. While you are not required to respond, your cooperation is needed to make the results of this data collection effort comprehensive, accurate, and timely.

OCCUPANT INJURY DATA

	Source of Injury Data	A.I.S. - 90 Body Region	Type of Anatomic Structure	Specific Anatomic Structure	Level of Injury	A.I.S. Severity	Aspect	Injury Source	Injury Source Confidence Level	Direct/ Indirect Injury	Occupant Area Intrusion Number
11th											
12th											
13th											
14th											
15th											
16th											
17th											
18th											
19th											
20th											
21st											
22nd											
23rd											
24th											
25th											

OCCUPANT INJURY CLASSIFICATION

Body Region

(1) Head
(2) Face
(3) Neck
(4) Thorax
(5) Abdomen
(6) Spine
(7) Upper Extremity
(8) Lower Extremity
(9) Unspecified

Type of Anatomic Structure

(1) Whole Area
(2) Vessels
(3) Nerves
(4) Organs (includes Muscles/ligaments)
(5) Skeletal (includes joints)
(6) Head - LOC
(9) Skin

Specific Anatomic Structure

Vessels, Nerves, Organs, Bones, Joints are assigned consecutive two digit numbers beginning with 02.

The exceptions to this rule apply to:

Whole Area
(02) Skin - Abrasion
(04) Skin - Contusion
(06) Skin - Laceration
(08) Skin - Avulsion
(10) Amputation
(20) Burn
(30) Crush
(40) Degloving
(50) Injury - NFS
(90) Trauma, other than mechanical

Head - LOC
(02) Length of LOC
(04) Level
(06) of
(08) Consciousness
(10) Concussion

Spine
(02) Cervical
(04) Thoracic
(06) Lumbar

Level of Injury

Specific injuries are assigned consecutive two-digit numbers beginning with 02.

To the extent possible, within the organizational framework of the AIS, 00 is assigned to an injury NFS as to severity or where only one injury is given in the dictionary for that anatomic structure. 99 is assigned to any injury NFS as to lesion or severity.

Abbreviated Injury Scale

(1) Minor Injury
(2) Moderate Injury
(3) Serious Injury
(4) Severe Injury
(5) Critical Injury
(6) Maximum (untreatable)
(7) Injured, unknown severity

Aspect

(1) Right
(2) Left
(3) Bilateral
(4) Central
(5) Anterior
(6) Posterior
(7) Superior
(8) Inferior
(9) Unknown
(0) Whole region

SOURCE OF INJURY DATA

OFFICIAL RECORDS
(1) Autopsy records with or without hospital/medical records
(2) Hospital/medical records other than emergency room (e.g., discharge summary)
(3) Emergency room records only (including associated X-rays or other lab reports)
(4) Private physician, walk-in or emergency clinic

UNOFFICIAL RECORDS
(5) Lay coroner report
(6) E.M.S. personnel
(7) Interviewee
(8) Other source (specify):

(9) Police

INJURY SOURCE CONFIDENCE LEVEL

(1) Certain
(2) Probable
(3) Possible
(9) Unknown

DIRECT/INDIRECT INJURY

(1) Direct contact injury
(2) Indirect contact injury
(3) Noncontact injury
(7) Injured, unknown source

INJURY SOURCES

FRONT†
(001) Windshield
(002) Mirror
(003) Sunvisor
(004) Steering wheel rim
(005) Steering wheel hub/spoke
(006) Steering wheel (combination of codes 004 and 005)
(007) Steering column, transmission selector lever, other attachment
(008) Cellular telephone or CB radio
(009) Add on equipment (e.g., tape deck, air conditioner)
(010) Left instrument panel and below
(011) Center instrument panel and below
(012) Right instrument panel and below
(013) Glove compartment door
(014) Knee bolster
(015) Windshield including one or more of the following: front header, A (A1/A2)-pillar, instrument panel, mirror, or steering assembly (driver side only)
(016) Windshield including one or more of the following: front header, A (A1/A2)-pillar, instrument panel, or mirror (passenger side only)
(017) Windshield reinforced by exterior object (specify) _____
(019) Other front object (specify): _____

LEFT SIDE
(051) Left side interior surface, excluding hardware or armrests
(052) Left side hardware or armrest
(053) Left A (A1/A2)-pillar
(054) Left B-pillar
(055) Other left pillar (specify): _____
(056) Left side window glass
(057) Left side window frame
(058) Left side window sill
(059) Left side window glass including one or more of the following: frame, window sill, A (A1/A2)-pillar, B-pillar, or roof side rail.
(060) Other left side object (specify): _____

RIGHT SIDE
(101) Right side interior surface, excluding hardware or armrests
(102) Right side hardware or armrest
(103) Right A (A1/A2)-pillar
(104) Right B-pillar
(105) Other right pillar (specify): _____
(106) Right side window glass
(107) Right side window frame
(108) Right side window sill
(109) Right side window glass including one or more of the following: frame, window sill, A (A1/A2)-pillar, B-pillar, or roof side rail.
(110) Other right side object (specify): _____

INTERIOR
(151) Seat, back support
(152) Belt restraint webbing/buckle
(153) Belt restraint B-pillar or door frame attachment point
(154) Other restraint system component (specify): _____
(155) Head restraint system
(160) Other occupants (specify): _____
(161) Interior loose objects
(162) Child safety seat (specify): _____
(163) Other interior object (specify): _____

AIR BAG
(170) Air bag-driver side
(171) Air bag-driver side and eyewear
(172) Air bag-driver side and jewelry
(173) Air bag-driver side and object held
(174) Air bag-driver side and object in mouth
(175) Air bag compartment cover-driver side
(176) Air bag compartment cover-driver side and eyewear
(177) Air bag compartment cover-driver side and jewelry
(178) Air bag compartment cover-driver side and object held
(179) Air bag compartment cover-driver side and object in mouth
(180) Air bag-passenger side
(181) Air bag-passenger side and eyewear
(182) Air bag-passenger side and jewelry
(183) Air bag-passenger side and object held
(184) Air bag-passenger side and object in mouth
(185) Air bag compartment cover-passenger side
(186) Air bag compartment cover-passenger side and eyewear
(187) Air bag compartment cover-passenger side and jewelry
(188) Air bag compartment cover-passenger side and object held
(189) Air bag compartment cover-passenger side and object in mouth
(190) Other air bag (specify) _____
(195) Other air bag compartment cover (specify) _____

ROOF
(201) Front header
(202) Rear header
(203) Roof left side rail
(204) Roof right side rail
(205) Roof or convertible top

FLOOR
(251) Floor (including toe pan)
(252) Floor or console mounted transmission lever, including console
(253) Parking brake handle
(254) Foot controls including parking brake

REAR
(301) Backlight (rear window)
(302) Backlight storage rack, door, etc.
(303) Other rear object (specify): _____

ADAPTIVE (ASSISTIVE) DRIVING EQUIPMENT
(401) Hand controls for braking/acceleration
(402) Steering control devices (attached to OEM steering wheel)
(403) Steering knob attached to steering wheel
(405) Replacement steering wheel (i.e., reduced diameter)
(406) Joy stick steering controls
(407) Wheelchair tie-downs
(408) Modification to seat belts, (specify): _____
(409) Additional or relocated switches, (specify): _____
(410) Raised roof
(411) Wall mounted head rest (used behind wheel chair)
(412) Other adaptive device (specify): _____

EXTERIOR of OCCUPANT'S VEHICLE
(451) Hood
(452) Outside hardware (e.g., outside mirror, antenna)
(453) Other exterior surface or tires (specify): _____
(454) Unknown exterior objects

EXTERIOR OF OTHER MOTOR VEHICLE
(501) Front bumper
(502) Hood edge
(503) Other front of vehicle (specify): _____
(504) Hood
(505) Hood ornament
(506) Windshield, roof rail, A-pillar
(507) Side surface
(508) Side mirrors
(509) Other side protrusions (specify): _____
(510) Rear surface
(511) Undercarriage
(512) Tires and wheels
(513) Other exterior of other motor vehicle (specify): _____
(514) Unknown exterior of other motor vehicle

OTHER VEHICLE OR OBJECT IN THE ENVIRONMENT
(551) Ground
(598) Other vehicle or object (specify): _____
(599) Unknown vehicle or object

NONCONTACT INJURY
(601) Fire in vehicle
(602) Flying glass
(603) Other noncontact injury source (specify): _____
(604) Air bag exhaust gases
(697) Injured, unknown source

OFFICIAL INJURY DATA — SOFT TISSUE INJURIES

Restrained?

__ No

__ Yes

Blood Alcohol Level (mg/dl)

BAL = 0

+benzodiazepines

Glasgow Coma Scale Score

GCSS = 15

Units of Blood Given

Units = 0

Arterial Blood Gases

pH = _____

PO_2 = _____

PCO_2 = _____

HCO_3 = _____

Indicate the Location, Specific Anatomic Structure, Detail (size, depth, fracture type, head injury clinical signs and neurological deficits), and Source of all injuries indicated by official sources (or from PAR or other unofficial sources if medical records and interviewee data are unavailable.)

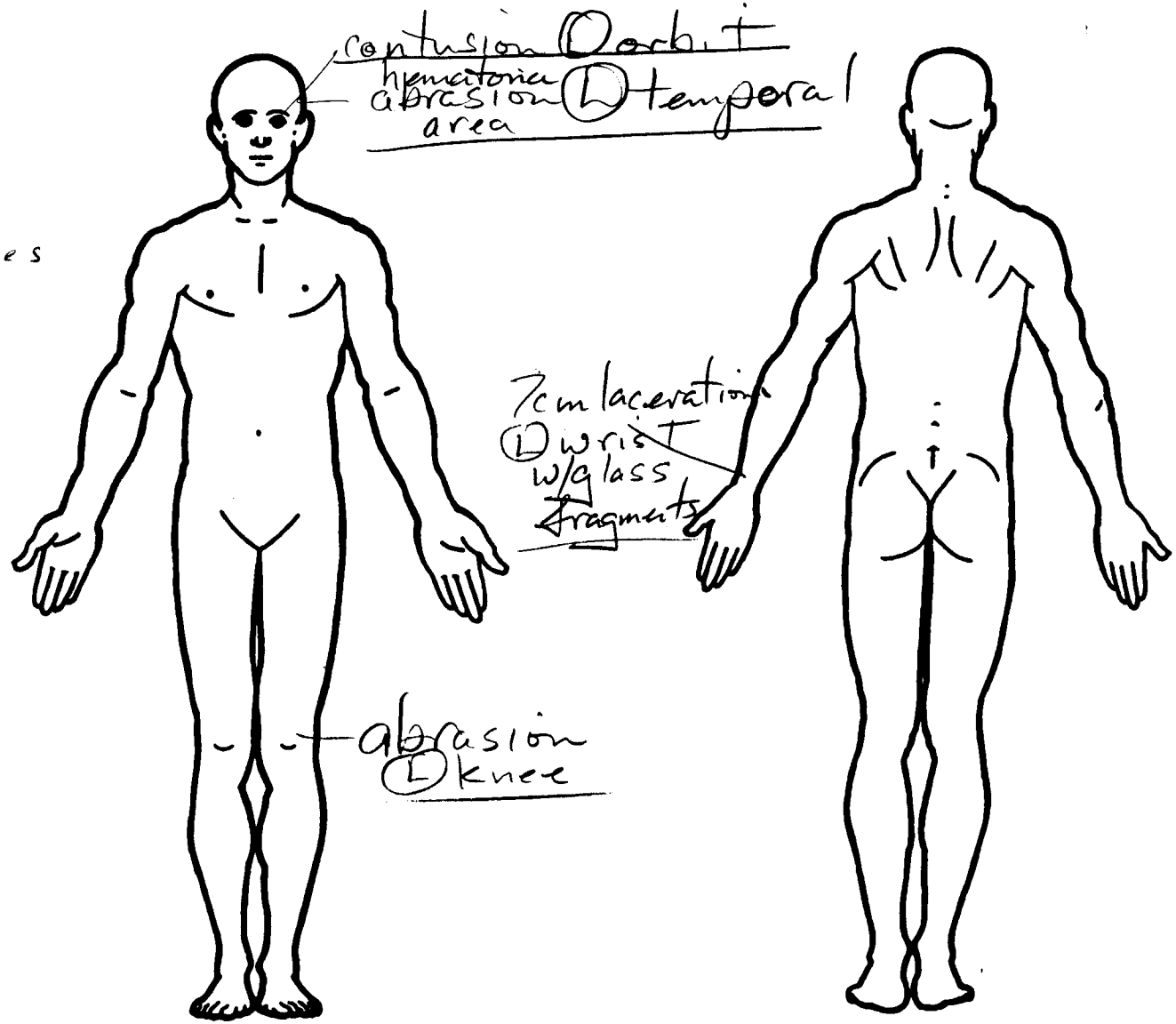

OFFICIAL INJURY DATA — SKELETAL INJURIES

Indicate the Location, Specific Anatomic Structure, Detail (size, depth, fracture type, head injury clinical signs and neurological deficits), and Source of all injuries indicated by official sources (or from PAR or other unofficial sources if medical records and interviewee data are unavailable.)

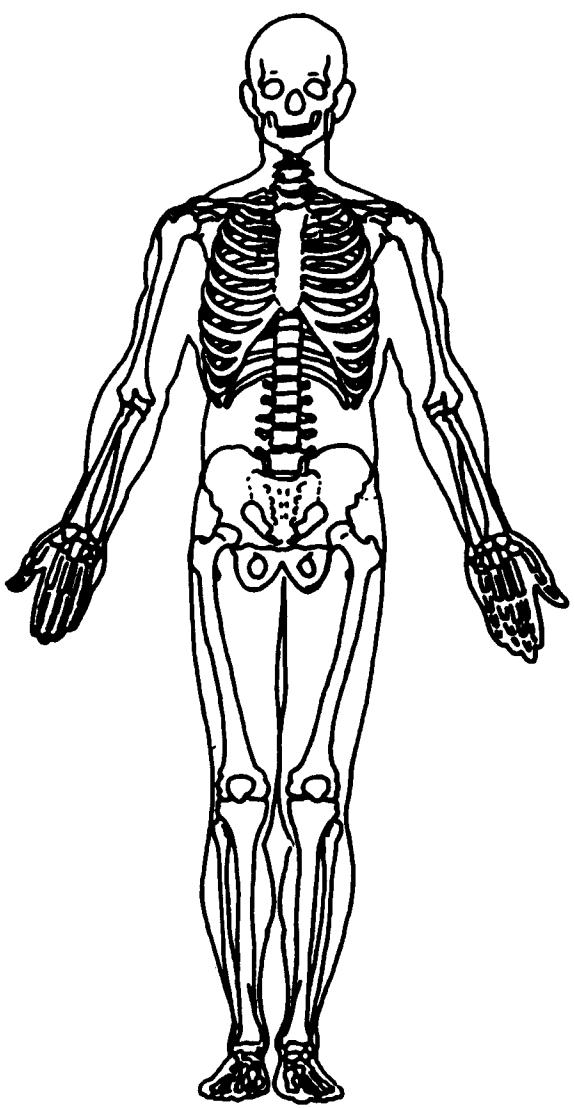

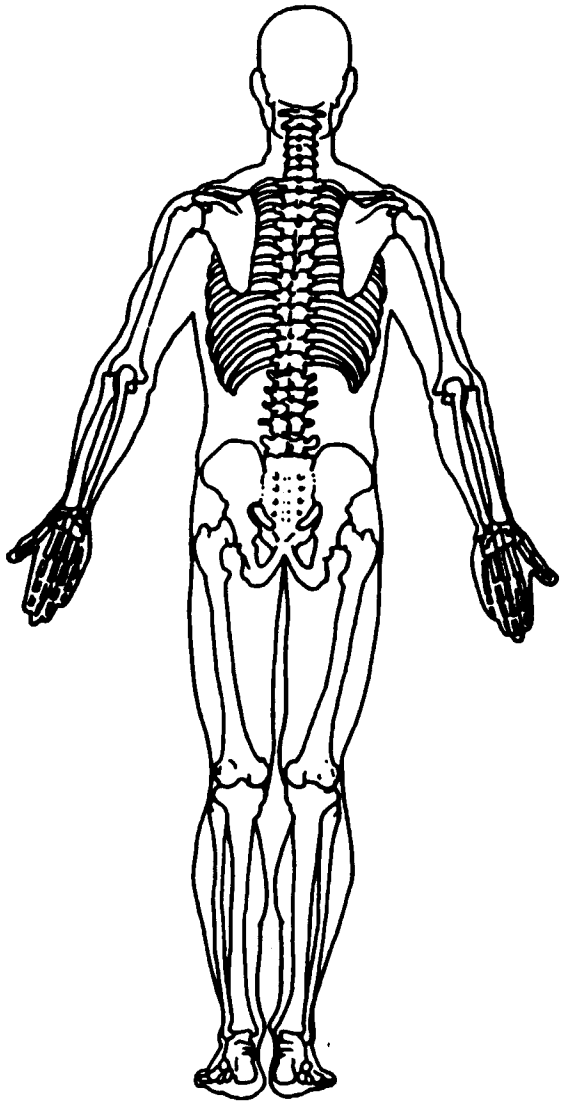

OFFICIAL INJURY DATA —INTERNAL INJURIES

Indicate the Location, Specific Anatomic Structure, Detail (size, depth, fracture type, head injury clinical signs and neurological deficits), and Source of all injuries indicated by official sources (or from PAR or other unofficial sources if medical records and interviewee data are unavailable.)

Subdural/subarachnoid hemorrhage on (R) tentorium

+LOC
GCS=15@ER

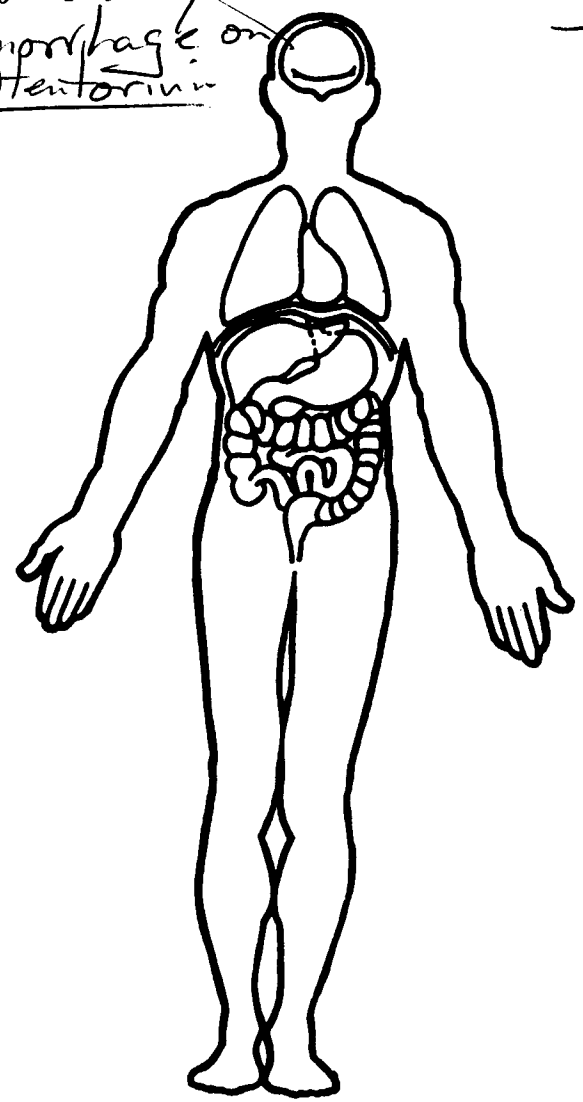

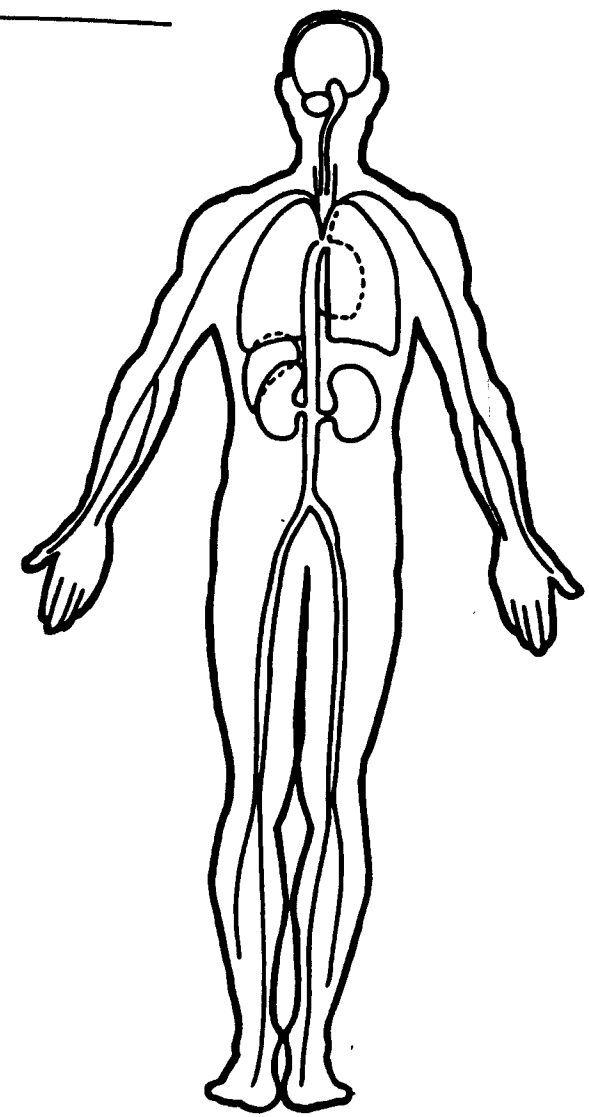

U.S. Department of Transportation
National Highway Traffic Safety Administration

OCCUPANT ASSESSMENT FORM

Form Approved
O.M.B. No. 2127-0021

NATIONAL ACCIDENT SAMPLING SYSTEM
CRASHWORTHINESS DATA SYSTEM

1. Primary Sampling Unit Number: 4 8
2. Case Number - Stratum: 2 2 9 K
3. Vehicle Number: 0 1
4. Occupant Number: 0 2

OCCUPANT'S CHARACTERISTICS

5. Occupant's Age: 2 4
Code actual age at time of accident.
(00) Less than one year old (specify by month): _____
(97) 97 years and older
(99) Unknown

6. Occupant's Sex: 2
(1) Male
(2) Female-not reported pregnant
(3) Female-pregnant-1st trimester(1st-3rd month)
(4) Female-pregnant-2nd trimester(4th-6th month)
(5) Female-pregnant-3rd trimester(7th-9th month)
(6) Female-pregnant-term unknown
(9) Unknown

7. Occupant's Height: 1 6 5
Code actual height to the nearest centimeter.
(999) Unknown

6 5 inches X 2.54 = ___ ___ ___ centimeters

8. Occupant's Weight: 0 5 2
Code actual weight to the nearest kilogram.
(999) Unknown

1 1 5 pounds X .4536 = ___ ___ ___ kilograms

9. Occupant's Role: 2
(1) Driver
(2) Passenger
(9) Unknown

OCCUPANT'S SEATING

10. Occupant's Seat Position: 1 3

Front Seat
(11) Left side
(12) Middle
(13) Right side
(14) Other (specify): _____
(15) On or in the lap of another occupant

Second Seat
(21) Left side
(22) Middle
(23) Right side
(24) Other (specify): _____
(25) On or in the lap of another occupant

Third Seat
(31) Left side
(32) Middle
(33) Right side
(34) Other (specify): _____
(35) On or in the lap of another occupant

Fourth Seat
(41) Left side
(42) Middle
(43) Right side
(44) Other (specify): _____
(45) On or in the lap of another occupant

(97) In or on unenclosed area
(98) Other seat (specify): _____
(99) Unknown

11. Occupant's Posture: 0
(0) Normal posture

Abnormal posture
(1) Kneeling or standing on seat
(2) Lying on or across seat
(3) Kneeling, standing or sitting in front of seat
(4) Sitting sideways or turned to talk with another occupant or to look out a rear window
(5) Sitting on a console
(6) Lying back in a reclined seat position
(7) Bracing with feet or hands on a surface in front of seat
(8) Other abnormal posture (specify): _____
(9) Unknown

This report is authorized by P.L. 89-563, Title 1, Section 106, 108, and 112. While you are not required to respond, your cooperation is needed to make the results of this data collection effort comprehensive, accurate, and timely.

EJECTION/ENTRAPMENT

12. Ejection 0
    (0) No ejection
    (1) Complete ejection
    (2) Partial ejection
    (3) Ejection, unknown degree
    (9) Unknown

13. Ejection Area 0
    (0) No ejection
    (1) Windshield
    (2) Left front
    (3) Right front
    (4) Left rear
    (5) Right rear
    (6) Rear
    (7) Roof
    (8) Other area (e.g., back of pickup, etc.)
    (specify):_____
    (9) Unknown

14. Ejection Medium 0
    (0) No ejection
    (1) Door/hatch/tailgate
    (2) Nonfixed roof structure
    (3) Fixed glazing
    (4) Nonfixed glazing (specify):
    Side glass
    (5) Integral structure
    (8) Other medium (specify):
    _____
    (9) Unknown

15. Medium Status (Immediately Prior To Impact) 0
    (0) No ejection
    (1) Open
    (2) Closed
    (3) Integral structure
    (9) Unknown

16. Entrapment 0
    (0) Not entrapped/exit not inhibited
    (1) Entrapped/pinned - mechanically restrained
    (2) Could not exit vehicle due to jammed doors, fire, etc.
    (specify):_____
    _____
    (9) Unknown

17. Occupant Mobility 9
    (0) Occupant fatal before removed from vehicle
    (1) Removed from vehicle while unconscious or not oriented to time or place
    (2) Removed from vehicle due to perceived serious injuries
    (3) Exited vehicle with some assistance
    (4) Exited vehicle under own power
    (5) Occupant fully ejected
    (8) Removed from vehicle for other reasons
    (specify): _____
    (9) Unknown

BELT SYSTEM FUNCTION

18. Manual (Active) Belt System Availability 4
(0) None available
(1) Belt removed/destroyed
(2) Shoulder belt
(3) Lap belt
(4) Lap and shoulder belt
(5) Belt available—type unknown

Integral Belt Partially Destroyed
(6) Shoulder belt (lap belt destroyed/removed)
(7) Lap belt (shoulder belt destroyed/removed)
(8) Other belt (specify):
(9) Unknown

19. Manual (Active) Belt System Use 0 4
(00) None used, not available, or belt removed/destroyed
(01) Inoperative (specify):
(02) Shoulder belt
(03) Lap belt
(04) Lap and shoulder belt
(05) Belt used—type unknown
(08) Other belt used (specify):
(12) Shoulder belt used with child safety seat
(13) Lap belt used with child safety seat
(14) Lap and shoulder belt used with child safety seat
(15) Belt used with child safety seat—type unknown
(18) Other belt used with child safety seat (specify):
(99) Unknown if belt used

20. Proper Use of Manual (Active) Belts 1
(0) None used or not available
(1) Belt used properly
(2) Belt used properly with child safety seat

Belt Used Improperly
(3) Shoulder belt worn under arm
(4) Shoulder belt worn behind back or seat
(5) Belt worn around more than one person
(6) Lap belt worn on abdomen
(7) Lap belt or lap and shoulder belt used improperly with child safety seat (specify):
(8) Other improper use of manual belt system (specify):
(9) Unknown

21. Manual (Active) Belt Failure Modes During Accident 1
(0) No manual belt used or not available
(1) No manual belt failure(s)
(2) Torn webbing (stretched webbing not included)
(3) Broken buckle or latchplate
(4) Upper anchorage separated
(5) Other anchorage separated (specify):
(6) Broken retractor
(7) Combination of above (specify):
(8) Other manual belt failure (specify):
(9) Unknown

22. Manual Shoulder Belt Upper Anchorage Adjustment 1
(0) No manual shoulder belt
(1) No upper anchorage adjustment for manual shoulder belt

Adjustable shoulder Belt Upper Anchorage
(2) In full up position
(3) In mid position
(4) In full down position
(5) Position unknown
(9) Unknown if position has adjustable upper anchorage adjustment

23. Automatic (Passive) Belt System Availability/ Function 0
(0) Not equipped/not available
(1) 2 point automatic belts
(2) 3 point automatic belts
(3) Automatic belts - type unknown

Non-functional
(4) Automatic belts destroyed or rendered inoperative
(9) Unknown

24. Automatic (Passive) Belt System Use 0
(0) Not equipped/not available/destroyed or rendered inoperative
(1) Automatic belt in use
(2) Automatic belt not in use (manually disconnected, motorized track inoperative) (specify):
(3) Automatic belt use unknown
(9) Unknown

25. Automatic (Passive) Belt System Type 0
(0) Not equipped/not available
(1) Non-motorized system
(2) Motorized system
(9) Unknown

26. Proper Use of Automatic (Passive) Belt System 0
(0) Not equipped/not available/not used
(1) Automatic belt used properly
(2) Automatic belt used properly with child safety seat

Automatic Belt Used Improperly
(3) Automatic shoulder belt worn under arm
(4) Automatic shoulder belt worn behind back
(5) Automatic belt worn around more than one person
(6) Lap portion of automatic belt worn on abdomen
(7) Automatic lap and shoulder belt or automatic shoulder belt used improperly with child safety seat (specify):
(8) Other improper use of automatic belt system (specify):
(9) Unknown

27. Automatic (Passive) Belt Failure Modes During Accident 0
(0) Not equipped/not available/not in use
(1) No automatic belt failure(s)
(2) Torn webbing (stretched webbing not included)
(3) Broken buckle or latchplate
(4) Upper anchorage separated
(5) Other anchorage separated (specify):
(6) Broken retractor
(7) Combination of above (specify):
(8) Other automatic belt failure (specify):
(9) Unknown

POLICE REPORTED RESTRAINT USE

28. Police Reported Belt Use 4
    (0) None used
    (1) Police did not indicate belt use
    (2) Shoulder belt
    (3) Lap belt
    (4) Lap and shoulder belt
    (5) Belt used, type not specified
    (6) Child safety seat
    (7) Automatic belt
    (8) Other type belt, (specify):

    _____
    (9) Police indicated "unknown"

29. Police Reported Air Bag Availability/Function 1
    (0) No air bag available
    (1) Police did not indicate air bag availability/function
    (2) Deployed
    (3) Not deployed
    (4) Unknown if deployed
    (9) Police indicated "unknown"

Check the Primary Source Used In Determining Belt Use.

[Y] Vehicle inspection
[ ] Official injury data
[ ] Driver/occupant interview
[ ] Other (specify):

_____

[ ] Unknown if belt used

AIR BAG SYSTEM FUNCTION

30. Frontal Air Bag System Availability/Function (This Occupant Position) 0
    (0) Not equipped/not available
    (1) Air bag

    Non-functional
    (2) Air bag disconnected (specify):

    _____
    (3) Air bag not reinstalled
    (9) Unknown

31. Frontal Air Bag System Deployment (This Occupant Position) 6
    (0) Not equipped/not available
    (1) Deployed during accident (as a result of impact)
    (2) Deployed inadvertently just prior to accident
    (3) Deployed, details unknown
    (4) Deployed as a result of a noncollision event during accident sequence (e.g., fire, explosion, electrical)
    (5) Unknown if deployed
    (7) Nondeployed
    (9) Unknown

32. Other Than First Seat Frontal Air Bag Availability/Function (This Occupant Position) 0
    (0) Not equipped/not available
    (1) Air bag

    Non-functional
    (2) Air bag disconnected (specify):

    _____
    (3) Air bag not reinstalled
    (9) Unknown

    Specify type of "other" air bag present:

    _____

33. Air Bag(s) Deployment, Other Than First Seat Frontal (This Occupant Position) 0
    (0) Not equipped with an "other" air bag
    (1) Deployed during accident (as a result of impact)
    (2) Deployed inadvertently just prior to accident
    (3) Deployed, details unknown
    (4) Deployed as a result of a noncollision event during accident sequence (e.g., fire, explosion, electrical)
    (5) Unknown if deployed
    (7) Nondeployed
    (9) Unknown

34. Are There Indications of Air Bag System Failure? (This Occupant Position) 0
    (0) Not equipped/not available
    (1) No
    (2) Yes (specify):

    _____
    (9) Unknown

FIRST SEAT FRONTAL AIR BAG SYSTEM EVALUATION

35. Had Vehicle Been in Previous Accident(s)? 0
(0) Not equipped/not available
(1) No previous accidents

Yes
(2) Previous accident(s) without deployment(s)
(3) One previous accident with deployment
(4) More than one previous accident with at least one deployment
(8) Previous accidents, unknown deployment status
(9) Unknown

36. Type of Air Bag 0
(0) Not equipped/not available
(1) Original manufacturer installed system
(2) Retrofitted air bag
(3) Replacement air bag
(8) Unknown type of air bag
(9) Unknown

37. Had Any Prior Maintenance/Service Been Performed On This Air Bag System? 0
(0) Not equipped/not available
(1) No prior maintenance
(2) Yes, prior maintenance (specify): _____
(9) Unknown

38. Air Bag Deployment Accident Event Sequence Number 0 6
(00) Not equipped/not available
_____ Code the accident event sequence number that initiated the air bag deployment
(96) Deployed, unknown event
(97) Not deployed
(98) Unknown if deployed
(99) Unknown

39. CDC For Air Bag Deployment Impact 0
(0) Not equipped/not available
(1) Highest delta V
(2) Second highest delta V
(3) Other non-coded delta V (specify): _____
(6) Deployed, unknown event
(7) Not deployed
(8) Unknown if deployed
(9) Unknown

40. Longitudinal Component of Delta V For Air Bag Deployment Impact + - 0 0 6
(_000) Not equipped/not available
Code the value of the delta V for the impact that initiated the air bag deployment
(_996) Deployment, unknown longitudinal Delta V
(_997) Not deployed
(_998) Unknown if deployed
(_999) Unknown

41. Did Air Bag Module Cover Flap(s) Open At Designated Tear Points? 0
(0) Not equipped/not available
(1) No
(2) Yes
(3) Deployed, unknown if flap(s) opened at designated tear points
(7) Not deployed
(8) Unknown if deployed
(9) Unknown

42. Were Air Bag Module Cover Flap(s) Damaged? 0
(0) Not equipped/not available
(1) No
(2) Yes (specify): _____
(3) Deployed, unknown if air bag module cover flap(s) damaged
(7) Not deployed
(8) Unknown if deployed
(9) Unknown

43. Was There Damage To The Air Bag? 0 0
(00) Not equipped/not available
(01) Not damaged

Yes - Air Bag Damage
(02) Ruptured
(03) Cut
(04) Torn
(05) Holed
(06) Burned
(07) Abraded
(88) Other damage (specify): _____
(95) Damaged, details unknown
(96) Deployed, unknown if damaged
(97) Not deployed
(98) Unknown if deployed
(99) Unknown

FIRST SEAT FRONTAL AIR BAG SYSTEM EVALUATION *continued*

44. Source of Air Bag Damage 0 0
(00) Not equipped/not available
(01) Not damaged
(02) Object worn by occupant, (specify):
(03) Object carried by occupant, (specify):
(04) Adaptive/assistive controls, (specify):
(05) Fire in vehicle
(06) Thermal burns
(07) Rescue or emergency efforts
(88) Other damage source (specify):
(95) Damaged, unknown source
(96) Deployed, unknown if damaged
(97) Not deployed
(98) Unknown if deployed
(99) Unknown

45. Was The Air Bag Tethered? 0
(0) Not equipped/not available
(1) No
(2) Yes (specify number of tether straps):
(3) Deployed, unknown if tethered
(7) Not deployed
(8) Unknown if deployed
(9) Unknown

46. Did The Air Bag Have Vent Ports? 0
(0) Not equipped/not available
(1) No
(2) Yes (specify number of vent ports):
(3) Deployed, unknown if vent ports present
(7) Not deployed
(8) Unknown if deployed
(9) Unknown

47. Was the Air Bag in this Occupant's Position Contacted by Another Occupant? 0
(0) Not equipped/not available
(1) No
(2) Yes (specify):
(3) Deployed, unknown if other occupant contact to air bag
(7) Not deployed
(8) Unknown if deployed
(9) Unknown

48. Was This Occupant Wearing Eye-wear? 0
(0) Not air bag equipped/air bag not available
(1) No
(2) Eyeglasses/sunglasses
(3) Contact lenses
(4) Deployed, unknown if eyewear worn
(7) Not deployed
(8) Unknown if deployed
(9) Unknown

HEAD RESTRAINT AND SEAT EVALUATION

49. Head Restraint Type/Damage by Occupant at This Occupant Position 3
(0) No head restraints
(1) Integral—no damage
(2) Integral—damaged during accident
(3) Adjustable—no damage
(4) Adjustable—damaged during accident
(5) Add-on—no damage
(6) Add-on—damaged during accident
(8) Other (specify):
(9) Unknown

50. Seat Type (this Occupant Position) 0 1
(00) Occupant not seated or no seat
(01) Bucket
(02) Bucket with folding back
(03) Bench
(04) Bench with separate back cushions
(05) Bench with folding back(s)
(06) Split bench with separate back cushions
(07) Split bench with folding back(s)
(08) Pedestal (i.e., column supported)
(09) Box mounted seat (i.e., van type)
(10) Other seat type (specify):
(99) Unknown

51. Seat Orientation (this Occupant Position) 1
(0) Occupant not seated or no seat
(1) Forward facing seat
(2) Rear facing seat
(3) Side facing seat (inward)
(4) Side facing seat (outward)
(8) Other (specify):
(9) Unknown

52. Seat Track Adjusted Position Prior To Impact 6
(0) Occupant not seated or no seat
(1) Non-adjustable seat track

Adjustable Seat Track
(2) Seat at forward most track position
(3) Seat between forward most and middle track positions
(4) Seat at middle track position
(5) Seat between middle and rear most track positions
(6) Seat at rear most track position
(9) Unknown

HEAD RESTRAINT AND SEAT EVALUATION *continued*

53. Seat Back Incline Prior and Post Impact 2 3
    (00) Occupant not seated or no seat
    (01) Not adjustable

Upright prior to impact
    (11) Moved to completely rearward position
    (12) Moved to rearward midrange position
    (13) Moved to slightly rearward position
    (14) Retained pre-impact position
    (15) Moved to slightly forward position
    (16) Moved to forward midrange position
    (17) Moved to completely forward position

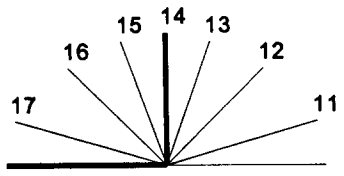

Slightly reclined prior to impact
    (21) Moved to completely rearward position
    (22) Moved to rearward midrange position
    (23) Retained pre-impact position
    (24) Moved to upright position
    (25) Moved to slightly forward position
    (26) Moved to forward midrange position
    (27) Moved to completely forward position

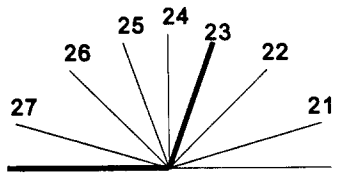

Completely reclined prior to impact
    (31) Retained pre-impact position
    (32) Moved to rearward midrange position
    (33) Moved to slightly rearward position
    (34) Moved to upright position
    (35) Moved to slightly forward position
    (36) Moved to forward midrange position
    (37) Moved to completely forward position

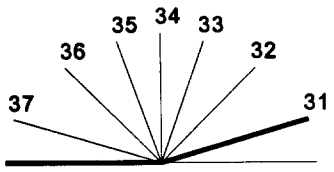

    (99) Unknown

54. Seat Performance (this Occupant Position) 1
    (0) Occupant not seated or no seat
    (1) No seat performance failure(s)
    (2) Seat adjusters failed
    (3) Seat back folding locks or "seat back" failed (specify):_____
    (4) Seat track/anchors failed
    (5) Deformed by impact of occupant
    (6) Deformed by passenger compartment intrusion, (specify):_____
    _____
    (7) Combination of above (specify):
    _____
    (8) Other (specify): _____
    (9) Unknown

CHILD SAFETY SEAT

55. Child Safety Seat Make/Model 0 0 0
(000) No child safety seat
Applicable codes are found in your NASS CDS Data Collection, Coding and Editing
(950) Built-in child safety seat
(997) Other make/model (specify):
_____
(998) Unknown make/model
(999) Unknown if child safety seat used

56. Type of Child Safety Seat 0
(0) No child safety seat
(1) Infant seat
(2) Toddler seat
(3) Convertible seat
(4) Booster seat - with shield
(5) Booster seat - without shield
(7) Other type child safety seat (specify):
_____
(8) Unknown child safety seat type
(9) Unknown if child safety seat used

57. Child Safety Seat Orientation 0 0
(00) No child safety seat

Designed for Rear Facing for This Age/Weight
(01) Rear facing
(02) Forward facing
(08) Other orientation (specify):
_____
(09) Unknown orientation

Designed For Forward Facing for This Age/Weight
(11) Rear facing
(12) Forward facing
(18) Other orientation (specify):
_____
(19) Unknown orientation

Unknown Design or Orientation For This Age/Weight, or Unknown Age/Weight
(21) Rear facing
(22) Forward facing
(28) Other orientation (specify):
_____
(29) Unknown orientation

(99) Unknown if child safety seat used

58. Child Safety Seat Harness Usage 0 0

59. Child Safety Seat Shield Usage 0 0

60. Child Safety Seat Tether Usage 0 0

Note: Options below applicable to Variables OA58-OA60.
(00) No child safety seat

Not Designed With Harness/Shield/Tether
(01) After market harness/shield/tether added, not used
(02) After market harness/shield/tether used
(03) Child safety seat used, but no after market harness/shield/tether added
(09) Unknown if harness/shield/tether added or used

Designed With Harness/Shield/Tether
(11) Harness/shield/tether not used
(12) Harness/shield/tether used
(19) Unknown if harness/shield/tether used

Unknown If Designed With Harness/Shield/Tether
(21) Harness/shield/tether not used
(22) Harness/shield/tether used
(29) Unknown if harness/shield/tether used

(99) Unknown if child safety seat used

INJURY CONSEQUENCES

61. Injury Severity (Police Rating) 3

(0) O - No injury
(1) C - Possible injury
(2) B - Nonincapacitating injury
(3) A - Incapacitating injury
(4) K - Killed
(5) U - Injury, severity unknown
(6) Died prior to accident
(9) Unknown

62. Treatment - Mortality 3
(0) No treatment
(1) Fatal
(2) Fatal - ruled disease (specify):

_____

Nonfatal
(3) Hospitalization
(4) Transported and released
(5) Treatment at scene - nontransported
(6) Treatment later
(7) Treatment - other (specify):

_____
(8) Transported to a medical facility-unknown if treated
(9) Unknown

63. Type Of Medical Facility (for Initial Treatment) 1
(0) Not treated at a medical facility
(1) Trauma center
(2) Hospital
(3) Medical clinic
(4) Physician's office
(5) Treatment later at medical facility
(8) Other (specify):

_____
(9) Unknown

64. Hospital Stay 0 5
(00) Not Hospitalized
____Code the number of days (up through 60) that the occupant stayed in hospital.
(61) 61 days or more
(99) Unknown

65. Working Days Lost 0 9
____Code the number of days (up through 60) that the occupant lost from work due to the accident
(00) No working days lost
(61) 61 days or more
(62) Fatally injured
(97) Not working prior to accident
(99) Unknown

EMERGENCY RESPONSE INFORMATION

EMS Notification
(1) Not notified
(2) Notified
(9) Unknown

ROAD VEHICLE
AIR VEHICLE

EMS NotificationTime (first unit)
(9999) Unknown

____ ROAD VEHICLE ____
____ AIR VEHICLE ____

EMS Arrival Time (first unit)
(9998) EMS cancelled or did not arrive
(9999) Unknown

____ ROAD VEHICLE ____
____ AIR VEHICLE ____

EMS Departure Time To Treatment Facility (transporting unit)
(9997) EMS arrived, provided treatment, but did not transport
(9998) EMS arrived, but was not used
(9999) Unknown

____ ROAD VEHICLE ____
____ AIR VEHICLE ____

EMS Arrival Time At Treatment Facility
(9999) Unknown

____ ROAD VEHICLE ____
____ AIR VEHICLE ____

EMS Type
(01) Fire department
(02) Rescue squad
(03) Police department
(04) Trauma unit
(05) Disaster unit
(06) Ambulance service unit
(07) Hospital
(08) Mortuaries/funeral homes
(98) Other, specifiy: _____
(99) Unknown

FIRST UNIT TRANSPORTING UNIT
____ ROAD VEHICLE ____
____ AIR VEHICLE ____

EMS Care
(01) No care administered
(02) First aid
(03) Resuscitation
(04) CPR
(05) Emergency cardiac care
(06) Life support system monitoring (blood pressure, pulse rate, respiration, EKG)
(07) Emergency burn care
(08) Combination of above, specify: _____
(98) Other, specify: _____
(99) Unknown

ON-SCENE DURING TRANSPORT
____ ROAD VEHICLE ____
____ AIR VEHICLE ____

STOP WORK HERE VARIABLES 66-74 TO BE CODED BY THE ZONE CENTER

TO BE CODED BY THE ZONE CENTER

INJURY CONSEQUENCES

66. Time to Death — 00
Code number of hours from time of accident to time of death up through 24 hours. If time of death is greater than 24 hours, code number of days. (Note: 1 day = 31, 2 days = 32, ... n days = 30 +n up through 30 days = 60)
(00) Not fatal
(96) Fatal - ruled disease
(99) Unknown

67. 1st Medically Reported Cause of Death — 00

68. 2nd Medically Reported Cause of Death — 00

69. 3rd Medically Reported Cause of Death — 00
Code the Occupant Injury from line number(s) for the medically reported injury(s) which reportedly contributed to this occupant's death
(00) Not fatal or no additional causes
(96) Mode of death given but specific injuries are not linked to cause of death. (specify): _____
(97) Other result (includes fatal ruled disease) (specify): _____
(99) Unknown

70. Number of Recorded Injuries for This Occupant — 05
Code the actual number of injuries recorded for this occupant.
(00) No recorded injuries
(97) Injured, details unknown
(99) Unknown if injured

TRAUMA DATA

71. Glasgow Coma Scale (GCS) Score (at Medical Facility) — 14
(00) Not injured
(01) Injured - not treated at medical facility
(02) No GCS Score at medical facility
(03-15) Code the actual value of the initial GCS Score recorded at medical facility.
(97) Injured, details unknown
(99) Unknown if injured

72. Was the Occupant Given Blood? — 1
(1) No - blood not given
(2) Yes - blood given (specify units): _____
(9) Unknown if blood given

73. Arterial Blood Gases (ABG) - HCO_3 — 01
(00) Not injured
(01) Injured, ABGs not measured or reported
(02-50) Code the actual value of the HCO_3
(96) ABGs reported , HCO_3 unknown
(97) Injured, details unknown
(99) Unknown if injured

BELT USE DETERMINATION

74. Primary Source of Belt Use Determination — 4
(0) Not equipped/not available/destroyed or rendered inoperative
(1) Vehicle inspection
(2) Official injury data
(3) Driver/occupant interview
(8) Other (specify): _____
(9) Unknown if belt used

U.S. Department of Transportation
National Highway Traffic Safety Administration

OCCUPANT INJURY FORM

Form Approved
O.M.B. No. 2127-0021
NATIONAL ACCIDENT SAMPLING SYSTEM
CRASHWORTHINESS DATA SYSTEM

1. Primary Sampling Unit Number	48	3. Vehicle Number	01
2. Case Number - Stratum	229K	4. Occupant Number	02

INJURY DATA

Record below the actual injuries sustained by this occupant that were identified from the official and unofficial data sources. Remember not to double count an injury just because it was identified from two different sources. If greater than ten injuries have been documented, encode the balance on the Occupant Injury Supplement.

	Source of Injury Data	A.I.S. - 90 Body Region	Type of Anatomic Structure	Specific Anatomic Structure	Level of Injury	A.I.S. Severity	Aspect	Injury Source	Injury Source Confidence Level	Direct/ Indirect Injury	Occupant Area Intrusion Number
1st	5. 2	6. 1	7. 6	8. 02	9. 02	10. 2	11. D	12. 204	13. 2	14. 1	15. 09
2nd	16. 2	17. 1	18. 9	19. 06	20. 02	21. 1	22. D	23. 204	24. 2	25. 1	26. 09
3rd	27. 2	28. 1	29. 9	30. 04	31. 02	32. 1	33. 1	34. 204	35. 2	36. 1	37. 09
4th	38. 2	39. 8	40. 9	41. 06	42. 02	43. 1	44. 1	45. 012	46. 2	47. 1	48. 00
5th	49. 2	50. 8	51. 9	52. 02	53. 02	54. 1	55. 1	56. 012	57. 2	58. 1	59. 00
6th	60. __	61. __	62. __	63. __	64. __	65. __	66. __	67. ____	68. __	69. __	70. __
7th	71. __	72. __	73. __	74. __	75. __	76. __	77. __	78. ____	79. __	80. __	81. __
8th	82. __	83. __	84. __	85. __	86. __	87. __	88. __	89. ____	90. __	91. __	92. __
9th	93. __	94. __	95. __	96. __	97. __	98. __	99. __	100. ____	101. __	102. __	103. __
10th	104. __	105. __	106. __	107. __	108. __	109. __	110. __	111. ____	112. __	113. __	114. __

This report is authorized by P.L. 89-563, Title 1, Section 106, 108, and 112. While you are not required to respond, your cooperation is needed to make the results of this data collection effort comprehensive, accurate, and timely.

OCCUPANT INJURY DATA

	Source of Injury Data	A.I.S. - 90 Body Region	Type of Anatomic Structure	Specific Anatomic Structure	Level of Injury	A.I.S. Severity	Aspect	Injury Source	Injury Source Confidence Level	Direct/ Indirect Injury	Occupant Area Intrusion Number
11th	—	—	—	— —	— —	—	—	— — —	—	—	— —
12th	—	—	—	— —	— —	—	—	— — —	—	—	— —
13th	—	—	—	— —	— —	—	—	— — —	—	—	— —
14th	—	—	—	— —	— —	—	—	— — —	—	—	— —
15th	—	—	—	— —	— —	—	—	— — —	—	—	— —
16th	—	—	—	— —	— —	—	—	— — —	—	—	— —
17th	—	—	—	— —	— —	—	—	— — —	—	—	— —
18th	—	—	—	— —	— —	—	—	— — —	—	—	— —
19th	—	—	—	— —	— —	—	—	— — —	—	—	— —
20th	—	—	—	— —	— —	—	—	— — —	—	—	— —
21st	—	—	—	— —	— —	—	—	— — —	—	—	— —
22nd	—	—	—	— —	— —	—	—	— — —	—	—	— —
23rd	—	—	—	— —	— —	—	—	— — —	—	—	— —
24th	—	—	—	— —	— —	—	—	— — —	—	—	— —
25th	—	—	—	— —	— —	—	—	— — —	—	—	— —

OCCUPANT INJURY CLASSIFICATION

Body Region

(1) Head
(2) Face
(3) Neck
(4) Thorax
(5) Abdomen
(6) Spine
(7) Upper Extremity
(8) Lower Extremity
(9) Unspecified

Type of Anatomic Structure

(1) Whole Area
(2) Vessels
(3) Nerves
(4) Organs (includes Muscles/ligaments)
(5) Skeletal (includes joints)
(6) Head - LOC
(9) Skin

Specific Anatomic Structure

Vessels, Nerves, Organs, Bones, Joints are assigned consecutive two digit numbers beginning with 02.

The exceptions to this rule apply to:

Whole Area
(02) Skin - Abrasion
(04) Skin - Contusion
(06) Skin - Laceration
(08) Skin - Avulsion
(10) Amputation
(20) Burn
(30) Crush
(40) Degloving
(50) Injury - NFS
(90) Trauma, other than mechanical

Head - LOC
(02) Length of LOC

(04) Level
(06) of
(08) Consciousness

(10) Concussion

Spine
(02) Cervical
(04) Thoracic
(06) Lumbar

Level of Injury

Specific injuries are assigned consecutive two-digit numbers beginning with 02.

To the extent possible, within the organizational framework of the AIS, 00 is assigned to an injury NFS as to severity or where only one injury is given in the dictionary for that anatomic structure. 99 is assigned to any injury NFS as to lesion or severity.

Abbreviated Injury Scale

(1) Minor Injury
(2) Moderate Injury
(3) Serious Injury
(4) Severe Injury
(5) Critical Injury
(6) Maximum (untreatable)
(7) Injured, unknown severity

Aspect

(1) Right
(2) Left
(3) Bilateral
(4) Central
(5) Anterior
(6) Posterior
(7) Superior
(8) Inferior
(9) Unknown
(0) Whole region

SOURCE OF INJURY DATA

OFFICIAL RECORDS
(1) Autopsy records with or without hospital/medical records
(2) Hospital/medical records other than emergency room (e.g., discharge summary)
(3) Emergency room records only (including associated X-rays or other lab reports)
(4) Private physician, walk-in or emergency clinic

UNOFFICIAL RECORDS
(5) Lay coroner report
(6) E.M.S. personnel
(7) Interviewee
(8) Other source (specify):

(9) Police

INJURY SOURCE CONFIDENCE LEVEL

(1) Certain
(2) Probable
(3) Possible
(9) Unknown

DIRECT/INDIRECT INJURY

(1) Direct contact injury
(2) Indirect contact injury
(3) Noncontact injury
(7) Injured, unknown source

INJURY SOURCES

FRONT
(001) Windshield
(002) Mirror
(003) Sunvisor
(004) Steering wheel rim
(005) Steering wheel hub/spoke
(006) Steering wheel (combination of codes 004 and 005)
(007) Steering column, transmission selector lever, other attachment
(008) Cellular telephone or CB radio
(009) Add on equipment (e.g., tape deck, air conditioner)
(010) Left instrument panel and below
(011) Center instrument panel and below
(012) Right instrument panel and below
(013) Glove compartment door
(014) Knee bolster
(015) Windshield including one or more of the following: front header, A (A1/A2)-pillar, instrument panel, mirror, or steering assembly (driver side only)
(016) Windshield including one or more of the following: front header, A (A1/A2)-pillar, instrument panel, or mirror (passenger side only)
(017) Windshield reinforced by exterior object (specify) _____
(019) Other front object (specify): _____

LEFT SIDE
(051) Left side interior surface, excluding hardware or armrests
(052) Left side hardware or armrest
(053) Left A (A1/A2)-pillar
(054) Left B-pillar
(055) Other left pillar (specify): _____
(056) Left side window glass
(057) Left side window frame
(058) Left side window sill
(059) Left side window glass including one or more of the following: frame, window sill, A (A1/A2)-pillar, B-pillar, or roof side rail.
(060) Other left side object (specify): _____

RIGHT SIDE
(101) Right side interior surface, excluding hardware or armrests
(102) Right side hardware or armrest
(103) Right A (A1/A2)-pillar
(104) Right B-pillar
(105) Other right pillar (specify): _____
(106) Right side window glass
(107) Right side window frame
(108) Right side window sill
(109) Right side window glass including one or more of the following: frame, window sill, A (A1/A2)-pillar, B-pillar, or roof side rail.
(110) Other right side object (specify): _____

INTERIOR
(151) Seat, back support
(152) Belt restraint webbing/buckle
(153) Belt restraint B-pillar or door frame attachment point
(154) Other restraint system component (specify): _____
(155) Head restraint system
(160) Other occupants (specify): _____
(161) Interior loose objects
(162) Child safety seat (specify): _____
(163) Other interior object (specify): _____

AIR BAG
(170) Air bag-driver side
(171) Air bag-driver side and eyewear
(172) Air bag-driver side and jewelry
(173) Air bag-driver side and object held
(174) Air bag-driver side and object in mouth
(175) Air bag compartment cover-driver side
(176) Air bag compartment cover-driver side and eyewear
(177) Air bag compartment cover-driver side and jewelry
(178) Air bag compartment cover-driver side and object held
(179) Air bag compartment cover-driver side and object in mouth
(180) Air bag-passenger side
(181) Air bag-passenger side and eyewear
(182) Air bag-passenger side and jewelry
(183) Air bag-passenger side and object held
(184) Air bag-passenger side and object in mouth
(185) Air bag compartment cover-passenger side
(186) Air bag compartment cover-passenger side and eyewear
(187) Air bag compartment cover-passenger side and jewelry
(188) Air bag compartment cover-passenger side and object held
(189) Air bag compartment cover-passenger side and object in mouth
(190) Other air bag (specify) _____
(195) Other air bag compartment cover (specify) _____

ROOF
(201) Front header
(202) Rear header
(203) Roof left side rail
(204) Roof right side rail
(205) Roof or convertible top

FLOOR
(251) Floor (including toe pan)
(252) Floor or console mounted transmission lever, including console
(253) Parking brake handle
(254) Foot controls including parking brake

REAR
(301) Backlight (rear window)
(302) Backlight storage rack, door, etc.
(303) Other rear object (specify): _____

ADAPTIVE (ASSISTIVE) DRIVING EQUIPMENT
(401) Hand controls for braking/acceleration
(402) Steering control devices (attached to OEM steering wheel)
(403) Steering knob attached to steering wheel
(405) Replacement steering wheel (i.e., reduced diameter)
(406) Joy stick steering controls
(407) Wheelchair tie-downs
(408) Modification to seat belts, (specify): _____
(409) Additional or relocated switches, (specify): _____
(410) Raised roof
(411) Wall mounted head rest (used behind wheel chair)
(412) Other adaptive device (specify): _____

EXTERIOR of OCCUPANT'S VEHICLE
(451) Hood
(452) Outside hardware (e.g., outside mirror, antenna)
(453) Other exterior surface or tires (specify): _____
(454) Unknown exterior objects

EXTERIOR OF OTHER MOTOR VEHICLE
(501) Front bumper
(502) Hood edge
(503) Other front of vehicle (specify): _____
(504) Hood
(505) Hood ornament
(506) Windshield, roof rail, A-pillar
(507) Side surface
(508) Side mirrors
(509) Other side protrusions (specify): _____
(510) Rear surface
(511) Undercarriage
(512) Tires and wheels
(513) Other exterior of other motor vehicle (specify): _____
(514) Unknown exterior of other motor vehicle

OTHER VEHICLE OR OBJECT IN THE ENVIRONMENT
(551) Ground
(598) Other vehicle or object (specify): _____
(599) Unknown vehicle or object

NONCONTACT INJURY
(601) Fire in vehicle
(602) Flying glass
(603) Other noncontact injury source (specify): _____
(604) Air bag exhaust gases
(697) Injured, unknown source

OFFICIAL INJURY DATA — SOFT TISSUE INJURIES

Restrained?

___ No

___ Yes

Blood Alcohol Level (mg/dl)

BAL = 0

+Cannabinoids

Glasgow Coma Scale Score

GCSS = 14

Units of Blood Given

Units = 0

Arterial Blood Gases

pH = 7.446

PO_2 = 264.7

PCO_2 34.3

HCO_3 23.6

Indicate the Location, Specific Anatomic Structure, Detail (size, depth, fracture type, head injury clinical signs and neurological deficits), and Source of all injuries indicated by official sources (or from PAR or other unofficial sources if medical records and interviewee data are unavailable.)

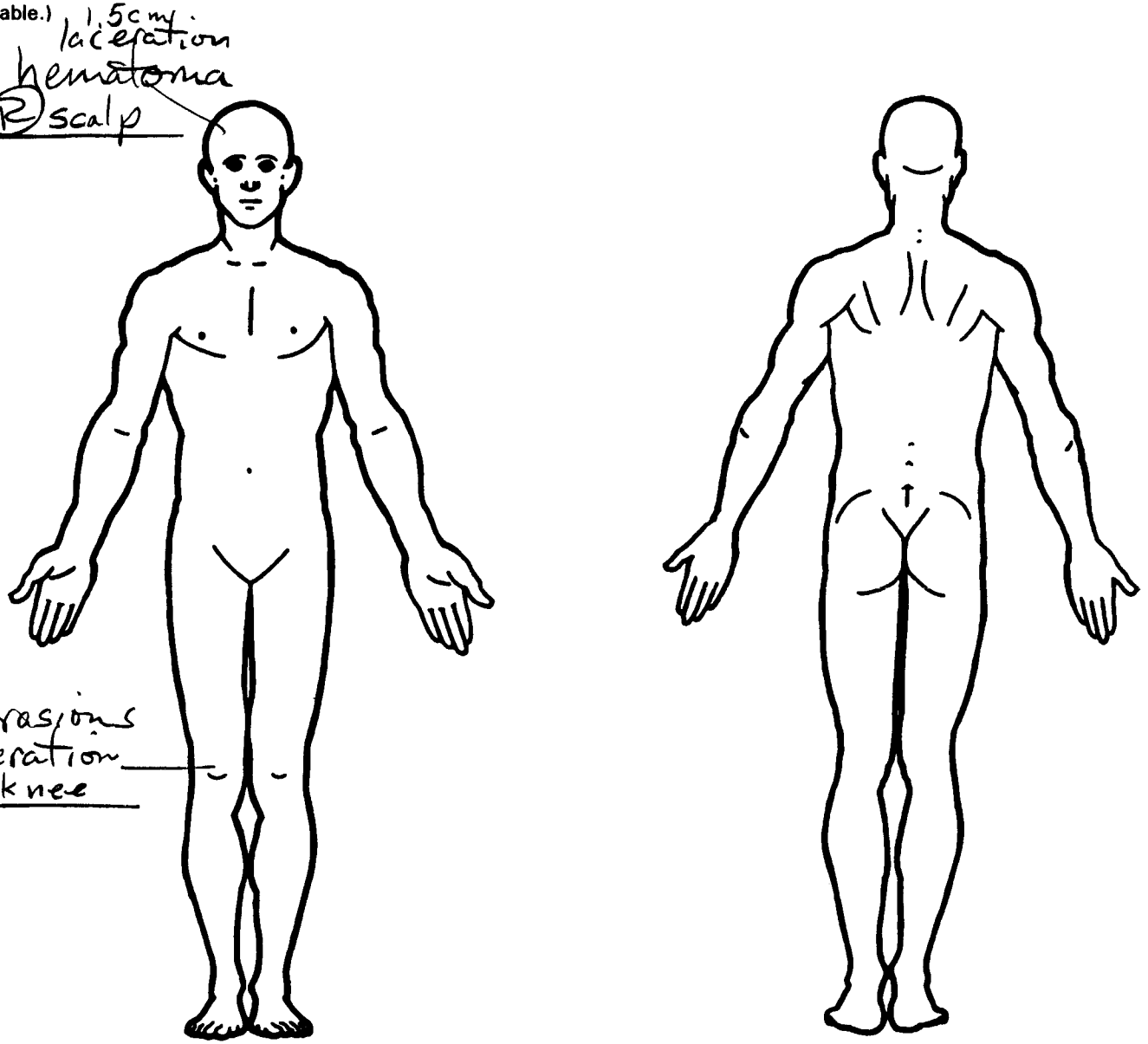

OFFICIAL INJURY DATA — SKELETAL INJURIES

Indicate the Location, Specific Anatomic Structure, Detail (size, depth, fracture type, head injury clinical signs and neurological deficits), and Source of all injuries indicated by official sources (or from PAR or other unofficial sources if medical records and interviewee data are unavailable.)

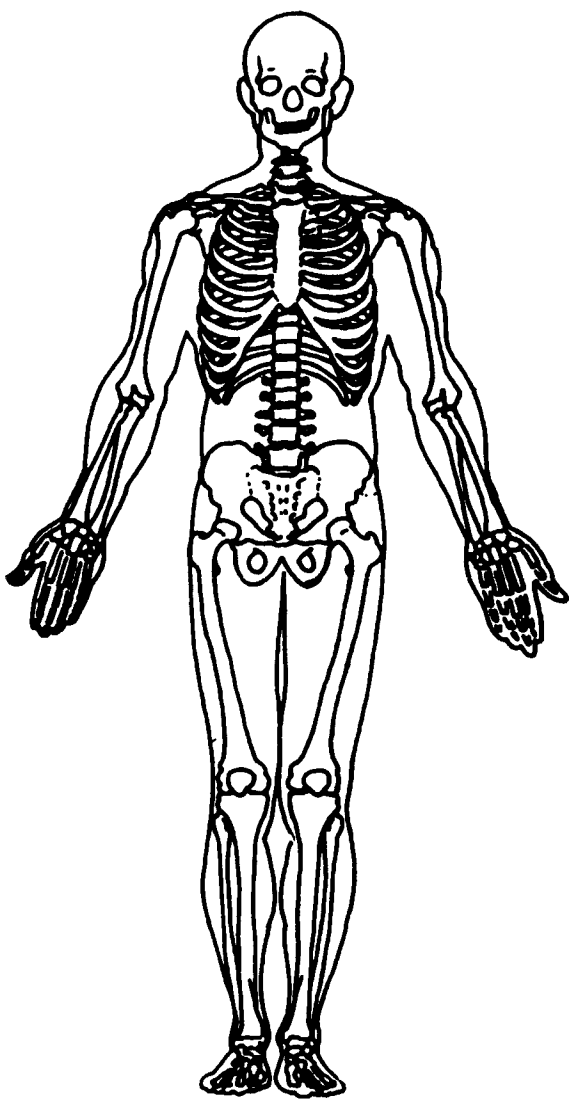

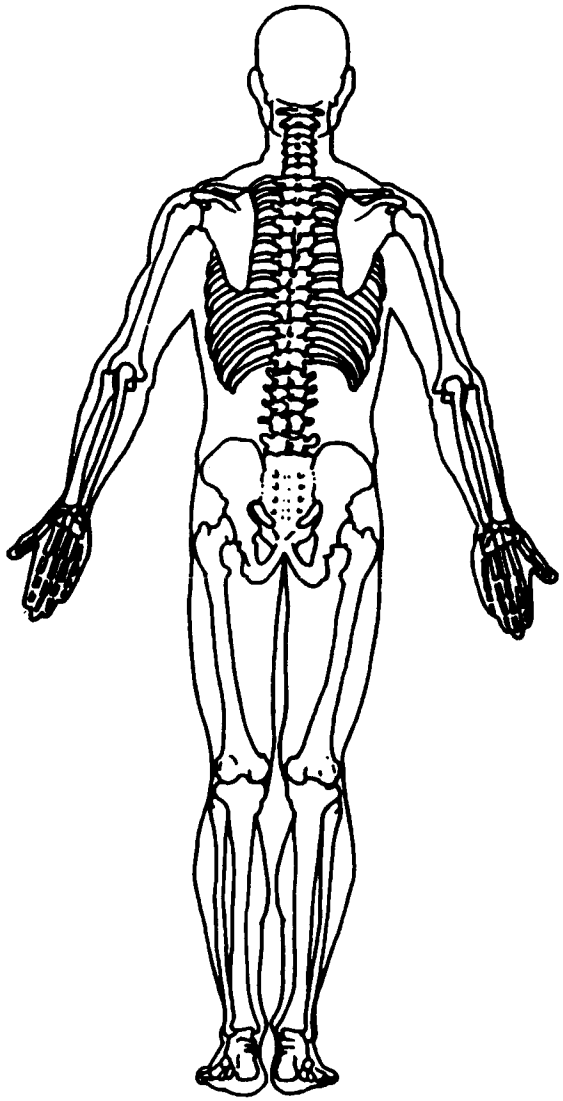

OFFICIAL INJURY DATA – INTERNAL INJURIES

Indicate the Location, Specific Anatomic Structure, Detail (size, depth, fracture type, head injury clinical signs and neurological deficits), and Source of all injuries indicated by official sources (or from PAR or other unofficial sources if medical records and interviewee data are unavailable.)

+LOC
Closed head injury

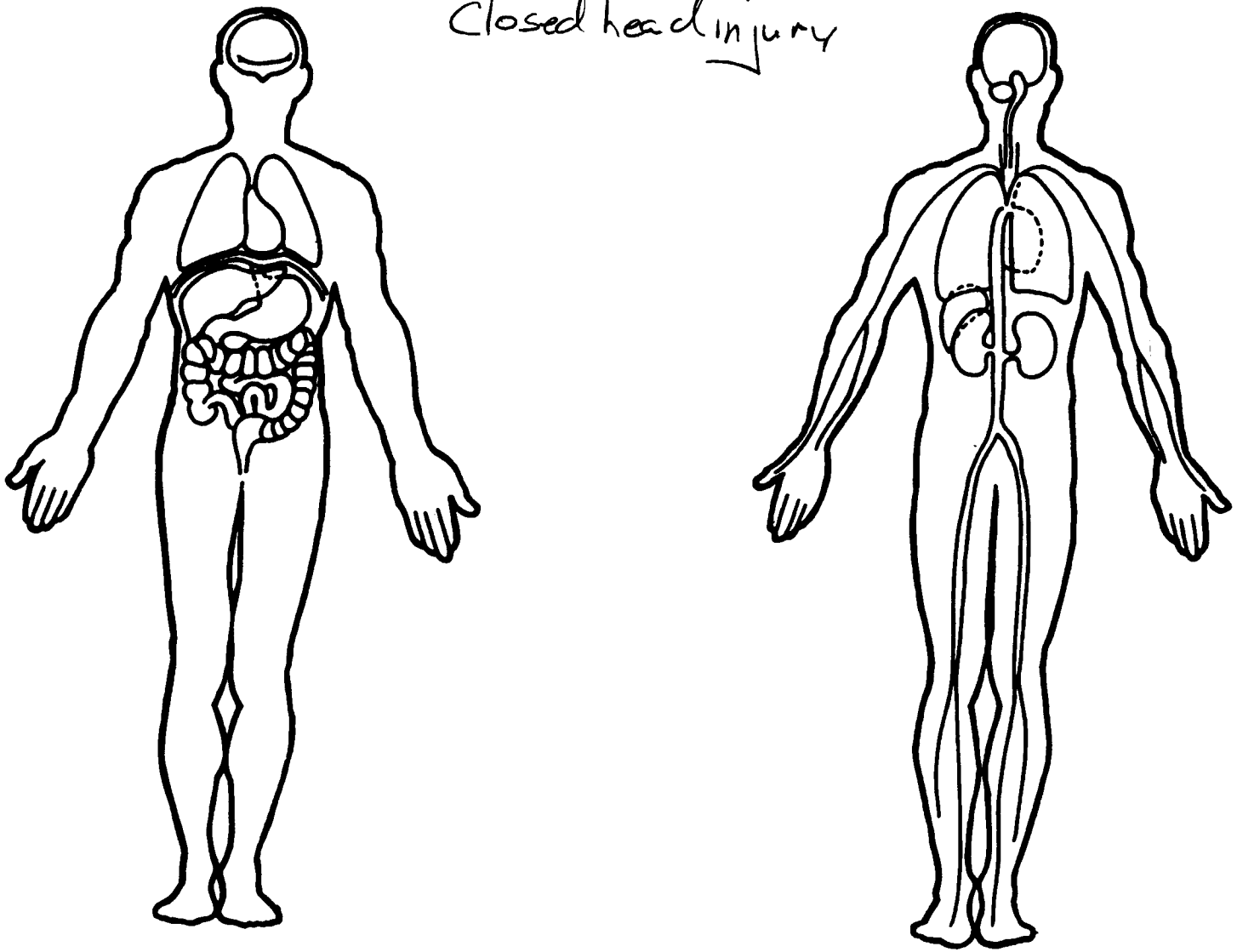

U.S. Department of Transportation
National Highway Traffic Safety Administration

OCCUPANT ASSESSMENT FORM

Form Approved
O.M.B. No. 2127-0021

NATIONAL ACCIDENT SAMPLING SYSTEM
CRASHWORTHINESS DATA SYSTEM

1. Primary Sampling Unit Number: 4 8
2. Case Number - Stratum: 2 2 9 14
3. Vehicle Number: 0 1
4. Occupant Number: 0 3

OCCUPANT'S CHARACTERISTICS

5. Occupant's Age: 2 3
Code actual age at time of accident.
(00) Less than one year old (specify by month): _____
(97) 97 years and older
(99) Unknown

6. Occupant's Sex: 2
(1) Male
(2) Female-not reported pregnant
(3) Female-pregnant-1st trimester(1st-3rd month)
(4) Female-pregnant-2nd trimester(4th-6th month)
(5) Female-pregnant-3rd trimester(7th-9th month)
(6) Female-pregnant-term unknown
(9) Unknown

7. Occupant's Height: 1 1 5
Code actual height to the nearest centimeter.
(999) Unknown

5 7 inches X 2.54 = 1 1 5 centimeters

8. Occupant's Weight: 0 4 5
Code actual weight to the nearest kilogram.
(999) Unknown

1 0 0 pounds X .4536 = 0 4 5 kilograms

9. Occupant's Role: 2
(1) Driver
(2) Passenger
(9) Unknown

OCCUPANT'S SEATING

10. Occupant's Seat Position: 2 1

Front Seat
(11) Left side
(12) Middle
(13) Right side
(14) Other (specify): _____
(15) On or in the lap of another occupant

Second Seat
(21) Left side
(22) Middle
(23) Right side
(24) Other (specify): _____
(25) On or in the lap of another occupant

Third Seat
(31) Left side
(32) Middle
(33) Right side
(34) Other (specify): _____
(35) On or in the lap of another occupant

Fourth Seat
(41) Left side
(42) Middle
(43) Right side
(44) Other (specify): _____
(45) On or in the lap of another occupant

(97) In or on unenclosed area
(98) Other seat (specify): _____
(99) Unknown

11. Occupant's Posture: 0
(0) Normal posture

Abnormal posture
(1) Kneeling or standing on seat
(2) Lying on or across seat
(3) Kneeling, standing or sitting in front of seat
(4) Sitting sideways or turned to talk with another occupant or to look out a rear window
(5) Sitting on a console
(6) Lying back in a reclined seat position
(7) Bracing with feet or hands on a surface in front of seat
(8) Other abnormal posture (specify): _____
(9) Unknown

This report is authorized by P.L. 89-563, Title 1, Section 106, 108, and 112. While you are not required to respond, your cooperation is needed to make the results of this data collection effort comprehensive, accurate, and timely.

EJECTION/ENTRAPMENT

12. Ejection 0
    (0) No ejection
    (1) Complete ejection
    (2) Partial ejection
    (3) Ejection, unknown degree
    (9) Unknown

13. Ejection Area 0
    (0) No ejection
    (1) Windshield
    (2) Left front
    (3) Right front
    (4) Left rear
    (5) Right rear
    (6) Rear
    (7) Roof
    (8) Other area (e.g., back of pickup, etc.)
    (specify):_____
    (9) Unknown

14. Ejection Medium 0
    (0) No ejection
    (1) Door/hatch/tailgate
    (2) Nonfixed roof structure
    (3) Fixed glazing
    (4) Nonfixed glazing (specify):
    Openable Backlight
    (5) Integral structure
    (8) Other medium (specify):
    _____
    (9) Unknown

15. Medium Status (Immediately Prior To Impact) 0
    (0) No ejection
    (1) Open
    (2) Closed
    (3) Integral structure
    (9) Unknown

16. Entrapment 0
    (0) Not entrapped/exit not inhibited
    (1) Entrapped/pinned - mechanically restrained
    (2) Could not exit vehicle due to jammed doors, fire, etc.
    (specify):_____
    _____
    (9) Unknown

17. Occupant Mobility 2
    (0) Occupant fatal before removed from vehicle
    (1) Removed from vehicle while unconscious or not oriented to time or place
    (2) Removed from vehicle due to perceived serious injuries
    (3) Exited vehicle with some assistance
    (4) Exited vehicle under own power
    (5) Occupant fully ejected
    (8) Removed from vehicle for other reasons
    (specify): _____
    (9) Unknown

BELT SYSTEM FUNCTION

18. Manual (Active) Belt System Availability 4
(0) None available
(1) Belt removed/destroyed
(2) Shoulder belt
(3) Lap belt
(4) Lap and shoulder belt
(5) Belt available—type unknown

Integral Belt Partially Destroyed
(6) Shoulder belt (lap belt destroyed/removed)
(7) Lap belt (shoulder belt destroyed/removed)
(8) Other belt (specify):

(9) Unknown

19. Manual (Active) Belt System Use 0 0
(00) None used, not available, or belt removed/destroyed
(01) Inoperative (specify):

(02) Shoulder belt
(03) Lap belt
(04) Lap and shoulder belt
(05) Belt used—type unknown
(08) Other belt used (specify):

(12) Shoulder belt used with child safety seat
(13) Lap belt used with child safety seat
(14) Lap and shoulder belt used with child safety seat
(15) Belt used with child safety seat—type unknown
(18) Other belt used with child safety seat (specify):
(99) Unknown if belt used

20. Proper Use of Manual (Active) Belts 0
(0) None used or not available
(1) Belt used properly
(2) Belt used properly with child safety seat

Belt Used Improperly
(3) Shoulder belt worn under arm
(4) Shoulder belt worn behind back or seat
(5) Belt worn around more than one person
(6) Lap belt worn on abdomen
(7) Lap belt or lap and shoulder belt used improperly with child safety seat (specify):

(8) Other improper use of manual belt system (specify):

(9) Unknown

21. Manual (Active) Belt Failure Modes During Accident 0
(0) No manual belt used or not available
(1) No manual belt failure(s)
(2) Torn webbing (stretched webbing not included)
(3) Broken buckle or latchplate
(4) Upper anchorage separated
(5) Other anchorage separated (specify):

(6) Broken retractor
(7) Combination of above (specify):

(8) Other manual belt failure (specify):

(9) Unknown

22. Manual Shoulder Belt Upper Anchorage Adjustment 1
(0) No manual shoulder belt
(1) No upper anchorage adjustment for manual shoulder belt

Adjustable shoulder Belt Upper Anchorage
(2) In full up position
(3) In mid position
(4) In full down position
(5) Position unknown
(9) Unknown if position has adjustable upper anchorage adjustment

23. Automatic (Passive) Belt System Availability/ Function 0
(0) Not equipped/not available
(1) 2 point automatic belts
(2) 3 point automatic belts
(3) Automatic belts - type unknown

Non-functional
(4) Automatic belts destroyed or rendered inoperative
(9) Unknown

24. Automatic (Passive) Belt System Use 0
(0) Not equipped/not available/destroyed or rendered inoperative
(1) Automatic belt in use
(2) Automatic belt not in use (manually disconnected, motorized track inoperative) (specify):
(3) Automatic belt use unknown
(9) Unknown

25. Automatic (Passive) Belt System Type 0
(0) Not equipped/not available
(1) Non-motorized system
(2) Motorized system
(9) Unknown

26. Proper Use of Automatic (Passive) Belt System 0
(0) Not equipped/not available/not used
(1) Automatic belt used properly
(2) Automatic belt used properly with child safety seat

Automatic Belt Used Improperly
(3) Automatic shoulder belt worn under arm
(4) Automatic shoulder belt worn behind back
(5) Automatic belt worn around more than one person
(6) Lap portion of automatic belt worn on abdomen
(7) Automatic lap and shoulder belt or automatic shoulder belt used improperly with child safety seat (specify):

(8) Other improper use of automatic belt system (specify):
(9) Unknown

27. Automatic (Passive) Belt Failure Modes During Accident 0
(0) Not equipped/not available/not in use
(1) No automatic belt failure(s)
(2) Torn webbing (stretched webbing not included)
(3) Broken buckle or latchplate
(4) Upper anchorage separated
(5) Other anchorage separated (specify):

(6) Broken retractor
(7) Combination of above (specify):
(8) Other automatic belt failure (specify):

(9) Unknown

POLICE REPORTED RESTRAINT USE

28. Police Reported Belt Use 0
    (0) None used
    (1) Police did not indicate belt use
    (2) Shoulder belt
    (3) Lap belt
    (4) Lap and shoulder belt
    (5) Belt used, type not specified
    (6) Child safety seat
    (7) Automatic belt
    (8) Other type belt, (specify):

    _____

    (9) Police indicated "unknown"

29. Police Reported Air Bag Availability/Function 1
    (0) No air bag available
    (1) Police did not indicate air bag availability/function
    (2) Deployed
    (3) Not deployed
    (4) Unknown if deployed
    (9) Police indicated "unknown"

Check the Primary Source Used In Determining Belt Use.

[X] Vehicle inspection
[ ] Official injury data
[ ] Driver/occupant interview
[ ] Other (specify):

_____

[ ] Unknown if belt used

AIR BAG SYSTEM FUNCTION

30. Frontal Air Bag System Availability/Function (This Occupant Position) 0
    (0) Not equipped/not available
    (1) Air bag

    Non-functional
    (2) Air bag disconnected (specify):

    _____

    (3) Air bag not reinstalled
    (9) Unknown

31. Frontal Air Bag System Deployment (This Occupant Position) 0
    (0) Not equipped/not available
    (1) Deployed during accident (as a result of impact)
    (2) Deployed inadvertently just prior to accident
    (3) Deployed, details unknown
    (4) Deployed as a result of a noncollision event during accident sequence (e.g., fire, explosion, electrical)
    (5) Unknown if deployed
    (7) Nondeployed
    (9) Unknown

32. Other Than First Seat Frontal Air Bag Availability/Function (This Occupant Position) 0
    (0) Not equipped/not available
    (1) Air bag

    Non-functional
    (2) Air bag disconnected (specify):

    _____

    (3) Air bag not reinstalled
    (9) Unknown

    Specify type of "other" air bag present:

    _____

33. Air Bag(s) Deployment, Other Than First Seat Frontal (This Occupant Position) 0
    (0) Not equipped with an "other" air bag
    (1) Deployed during accident (as a result of impact)
    (2) Deployed inadvertently just prior to accident
    (3) Deployed, details unknown
    (4) Deployed as a result of a noncollision event during accident sequence (e.g., fire, explosion, electrical)
    (5) Unknown if deployed
    (7) Nondeployed
    (9) Unknown

34. Are There Indications of Air Bag System Failure? (This Occupant Position) 0
    (0) Not equipped/not available
    (1) No
    (2) Yes (specify):

    _____

    (9) Unknown

FIRST SEAT FRONTAL AIR BAG SYSTEM EVALUATION

35. Had Vehicle Been in Previous Accident(s)? 0
(0) Not equipped/not available
(1) No previous accidents

Yes
(2) Previous accident(s) without deployment(s)
(3) One previous accident with deployment
(4) More than one previous accident with at least one deployment
(8) Previous accidents, unknown deployment status
(9) Unknown

36. Type of Air Bag 0
(0) Not equipped/not available
(1) Original manufacturer installed system
(2) Retrofitted air bag
(3) Replacement air bag
(8) Unknown type of air bag
(9) Unknown

37. Had Any Prior Maintenance/Service Been Performed On This Air Bag System? 0
(0) Not equipped/not available
(1) No prior maintenance
(2) Yes, prior maintenance (specify): _____
(9) Unknown

38. Air Bag Deployment Accident Event Sequence Number 0 0
(00) Not equipped/not available
_____ Code the accident event sequence number that initiated the air bag deployment
(96) Deployed, unknown event
(97) Not deployed
(98) Unknown if deployed
(99) Unknown

39. CDC For Air Bag Deployment Impact 0
(0) Not equipped/not available
(1) Highest delta V
(2) Second highest delta V
(3) Other non-coded delta V (specify): _____
(6) Deployed, unknown event
(7) Not deployed
(8) Unknown if deployed
(9) Unknown

40. Longitudinal Component of Delta V For Air Bag Deployment Impact + - 0 0 0
(_000) Not equipped/not available
Code the value of the delta V for the impact that initiated the air bag deployment
(_996) Deployment, unknown longitudinal Delta V
(_997) Not deployed
(_998) Unknown if deployed
(_999) Unknown

41. Did Air Bag Module Cover Flap(s) Open At Designated Tear Points? 0
(0) Not equipped/not available
(1) No
(2) Yes
(3) Deployed, unknown if flap(s) opened at designated tear points
(7) Not deployed
(8) Unknown if deployed
(9) Unknown

42. Were Air Bag Module Cover Flap(s) Damaged? 0
(0) Not equipped/not available.
(1) No
(2) Yes (specify): _____
(3) Deployed, unknown if air bag module cover flap(s) damaged
(7) Not deployed
(8) Unknown if deployed
(9) Unknown

43. Was There Damage To The Air Bag? 0 0
(00) Not equipped/not available
(01) Not damaged

Yes - Air Bag Damage
(02) Ruptured
(03) Cut
(04) Torn
(05) Holed
(06) Burned
(07) Abraded
(88) Other damage (specify): _____
(95) Damaged, details unknown
(96) Deployed, unknown if damaged
(97) Not deployed
(98) Unknown if deployed
(99) Unknown

FIRST SEAT FRONTAL AIR BAG SYSTEM EVALUATION *continued*

44. Source of Air Bag Damage 0 0
(00) Not equipped/not available
(01) Not damaged
(02) Object worn by occupant, (specify):
(03) Object carried by occupant, (specify):
(04) Adaptive/assistive controls, (specify):
(05) Fire in vehicle
(06) Thermal burns
(07) Rescue or emergency efforts
(88) Other damage source (specify):
(95) Damaged, unknown source
(96) Deployed, unknown if damaged
(97) Not deployed
(98) Unknown if deployed
(99) Unknown

45. Was The Air Bag Tethered? 0
(0) Not equipped/not available
(1) No
(2) Yes (specify number of tether straps):
(3) Deployed, unknown if tethered
(7) Not deployed
(8) Unknown if deployed
(9) Unknown

46. Did The Air Bag Have Vent Ports? 0
(0) Not equipped/not available
(1) No
(2) Yes (specify number of vent ports):
(3) Deployed, unknown if vent ports present
(7) Not deployed
(8) Unknown if deployed
(9) Unknown

47. Was the Air Bag in this Occupant's Position Contacted by Another Occupant? 0
(0) Not equipped/not available
(1) No
(2) Yes (specify):
(3) Deployed, unknown if other occupant contact to air bag
(7) Not deployed
(8) Unknown if deployed
(9) Unknown

48. Was This Occupant Wearing Eye-wear? 0
(0) Not air bag equipped/air bag not available
(1) No
(2) Eyeglasses/sunglasses
(3) Contact lenses
(4) Deployed, unknown if eyewear worn
(7) Not deployed
(8) Unknown if deployed
(9) Unknown

HEAD RESTRAINT AND SEAT EVALUATION

49. Head Restraint Type/Damage by Occupant at This Occupant Position 3
(0) No head restraints
(1) Integral—no damage
(2) Integral—damaged during accident
(3) Adjustable—no damage
(4) Adjustable—damaged during accident
(5) Add-on—no damage
(6) Add-on—damaged during accident
(8) Other (specify):
(9) Unknown

50. Seat Type (this Occupant Position) 0 7
(00) Occupant not seated or no seat
(01) Bucket
(02) Bucket with folding back
(03) Bench
(04) Bench with separate back cushions
(05) Bench with folding back(s)
(06) Split bench with separate back cushions
(07) Split bench with folding back(s)
(08) Pedestal (i.e., column supported)
(09) Box mounted seat (i.e., van type)
(10) Other seat type (specify):
(99) Unknown

51. Seat Orientation (this Occupant Position) 1
(0) Occupant not seated or no seat
(1) Forward facing seat
(2) Rear facing seat
(3) Side facing seat (inward)
(4) Side facing seat (outward)
(8) Other (specify):
(9) Unknown

52. Seat Track Adjusted Position Prior To Impact 1
(0) Occupant not seated or no seat
(1) Non-adjustable seat track

Adjustable Seat Track
(2) Seat at forward most track position
(3) Seat between forward most and middle track positions
(4) Seat at middle track position
(5) Seat between middle and rear most track positions
(6) Seat at rear most track position
(9) Unknown

HEAD RESTRAINT AND SEAT EVALUATION *continued*

53. Seat Back Incline Prior and Post Impact 0 1
(00) Occupant not seated or no seat
(01) Not adjustable

Upright prior to impact
(11) Moved to completely rearward position
(12) Moved to rearward midrange position
(13) Moved to slightly rearward position
(14) Retained pre-impact position
(15) Moved to slightly forward position
(16) Moved to forward midrange position
(17) Moved to completely forward position

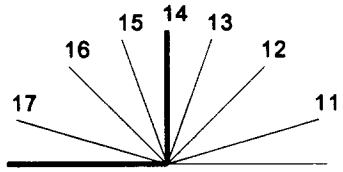

Slightly reclined prior to impact
(21) Moved to completely rearward position
(22) Moved to rearward midrange position
(23) Retained pre-impact position
(24) Moved to upright position
(25) Moved to slightly forward position
(26) Moved to forward midrange position
(27) Moved to completely forward position

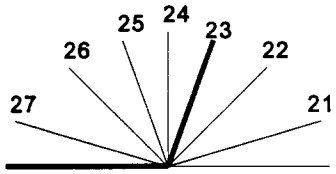

Completely reclined prior to impact
(31) Retained pre-impact position
(32) Moved to rearward midrange position
(33) Moved to slightly rearward position
(34) Moved to upright position
(35) Moved to slightly forward position
(36) Moved to forward midrange position
(37) Moved to completely forward position

(99) Unknown

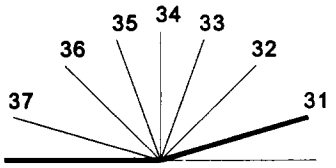

54. Seat Performance (this Occupant Position) 1
(0) Occupant not seated or no seat
(1) No seat performance failure(s)
(2) Seat adjusters failed
(3) Seat back folding locks or "seat back" failed (specify):_____
(4) Seat track/anchors failed
(5) Deformed by impact of occupant
(6) Deformed by passenger compartment intrusion, (specify):_____
_____
(7) Combination of above (specify):
_____
(8) Other (specify): _____
(9) Unknown

CHILD SAFETY SEAT

55. Child Safety Seat Make/Model 0 0 6
(000) No child safety seat
Applicable codes are found in your NASS CDS Data Collection, Coding and Editing
(950) Built-in child safety seat
(997) Other make/model (specify): _____
(998) Unknown make/model
(999) Unknown if child safety seat used

56. Type of Child Safety Seat 0
(0) No child safety seat
(1) Infant seat
(2) Toddler seat
(3) Convertible seat
(4) Booster seat - with shield
(5) Booster seat - without shield
(7) Other type child safety seat (specify): _____
(8) Unknown child safety seat type
(9) Unknown if child safety seat used

57. Child Safety Seat Orientation 0 0
(00) No child safety seat

Designed for Rear Facing for This Age/Weight
(01) Rear facing
(02) Forward facing
(08) Other orientation (specify): _____
(09) Unknown orientation

Designed For Forward Facing for This Age/Weight
(11) Rear facing
(12) Forward facing
(18) Other orientation (specify): _____
(19) Unknown orientation

Unknown Design or Orientation For This Age/Weight, or Unknown Age/Weight
(21) Rear facing
(22) Forward facing
(28) Other orientation (specify): _____
(29) Unknown orientation

(99) Unknown if child safety seat used

58. Child Safety Seat Harness Usage 0 0

59. Child Safety Seat Shield Usage 0 0

60. Child Safety Seat Tether Usage 0 0

Note: Options below applicable to Variables OA58-OA60.
(00) No child safety seat

Not Designed With Harness/Shield/Tether
(01) After market harness/shield/tether added, not used
(02) After market harness/shield/tether used
(03) Child safety seat used, but no after market harness/shield/tether added
(09) Unknown if harness/shield/tether added or used

Designed With Harness/Shield/Tether
(11) Harness/shield/tether not used
(12) Harness/shield/tether used
(19) Unknown if harness/shield/tether used

Unknown If Designed With Harness/Shield/Tether
(21) Harness/shield/tether not used
(22) Harness/shield/tether used
(29) Unknown if harness/shield/tether used

(99) Unknown if child safety seat used

INJURY CONSEQUENCES

61. Injury Severity (Police Rating) 3

(0) O - No injury
(1) C - Possible injury
(2) B - Nonincapacitating injury
(3) A - Incapacitating injury
(4) K - Killed
(5) U - Injury, severity unknown
(6) Died prior to accident
(9) Unknown

62. Treatment - Mortality 3

(0) No treatment
(1) Fatal
(2) Fatal - ruled disease (specify):

_____

Nonfatal
(3) Hospitalization
(4) Transported and released
(5) Treatment at scene - nontransported
(6) Treatment later
(7) Treatment - other (specify):

_____
(8) Transported to a medical facility-unknown if treated
(9) Unknown

63. Type Of Medical Facility (for Initial Treatment) 1

(0) Not treated at a medical facility
(1) Trauma center
(2) Hospital
(3) Medical clinic
(4) Physician's office
(5) Treatment later at medical facility
(8) Other (specify):

_____
(9) Unknown

64. Hospital Stay 0 5

(00) Not Hospitalized
____Code the number of days (up through 60) that the occupant stayed in hospital.
(61) 61 days or more
(99) Unknown

65. Working Days Lost 1 2

____Code the number of days (up through 60) that the occupant lost from work due to the accident
(00) No working days lost
(61) 61 days or more
(62) Fatally injured
(97) Not working prior to accident
(99) Unknown

EMERGENCY RESPONSE INFORMATION

EMS Notification
(1) Not notified
(2) Notified
(9) Unknown

ROAD VEHICLE
AIR VEHICLE

EMS NotificationTime (first unit)
(9999) Unknown

____ ROAD VEHICLE ____
____ AIR VEHICLE ____

EMS Arrival Time (first unit)
(9998) EMS cancelled or did not arrive
(9999) Unknown

____ ROAD VEHICLE ____
____ AIR VEHICLE ____

EMS Departure Time To Treatment Facility (transporting unit)
(9997) EMS arrived, provided treatment, but did not transport
(9998) EMS arrived, but was not used
(9999) Unknown

____ ROAD VEHICLE ____
____ AIR VEHICLE ____

EMS Arrival Time At Treatment Facility
(9999) Unknown

____ ROAD VEHICLE ____
____ AIR VEHICLE ____

EMS Type

	FIRST UNIT	TRANSPORTING UNIT
(01) Fire department		
(02) Rescue squad		
(03) Police department		
(04) Trauma unit		
(05) Disaster unit		
(06) Ambulance service unit		
(07) Hospital		
(08) Mortuaries/funeral homes		
(98) Other, specifiy: _____		
(99) Unknown		

ROAD VEHICLE
AIR VEHICLE

EMS Care

	ON-SCENE	DURING TRANSPORT
(01) No care administered		
(02) First aid		
(03) Resuscitation		
(04) CPR		
(05) Emergency cardiac care		
(06) Life support system monitoring (blood pressure, pulse rate, respiration, EKG)		
(07) Emergency burn care		
(08) Combination of above, specify: _____		
(98) Other, specify: _____		
(99) Unknown		

ROAD VEHICLE
AIR VEHICLE

STOP WORK HERE VARIABLES 66-74 TO BE CODED BY THE ZONE CENTER

TO BE CODED BY THE ZONE CENTER

INJURY CONSEQUENCES

66. Time to Death 00
Code number of hours from time of accident to time of death up through 24 hours. If time of death is greater than 24 hours, code number of days. (Note: 1 day = 31, 2 days = 32, ... n days = 30 +n up through 30 days = 60)
(00) Not fatal
(96) Fatal - ruled disease
(99) Unknown

67. 1st Medically Reported Cause of Death 00

68. 2nd Medically Reported Cause of Death 00

69. 3rd Medically Reported Cause of Death 00
Code the Occupant Injury from line number(s) for the medically reported injury(s) which reportedly contributed to this occupant's death
(00) Not fatal or no additional causes
(96) Mode of death given but specific injuries are not linked to cause of death. (specify):
(97) Other result (includes fatal ruled disease) (specify):
(99) Unknown

70. Number of Recorded Injuries for This Occupant 04
Code the actual number of injuries recorded for this occupant.
(00) No recorded injuries
(97) Injured, details unknown
(99) Unknown if injured

TRAUMA DATA

71. Glasgow Coma Scale (GCS) Score (at Medical Facility) 14
(00) Not injured
(01) Injured - not treated at medical facility
(02) No GCS Score at medical facility
(03-15) Code the actual value of the initial GCS Score recorded at medical facility.
(97) Injured, details unknown
(99) Unknown if injured

72. Was the Occupant Given Blood? 1
(1) No - blood not given
(2) Yes - blood given
(specify units):
(9) Unknown if blood given

73. Arterial Blood Gases (ABG) - HCO_3 01
(00) Not injured
(01) Injured, ABGs not measured or reported
(02-50) Code the actual value of the HCO_3
(96) ABGs reported , HCO_3 unknown
(97) Injured, details unknown
(99) Unknown if injured

BELT USE DETERMINATION

74. Primary Source of Belt Use Determination 1
(0) Not equipped/not available/destroyed or rendered inoperative
(1) Vehicle inspection
(2) Official injury data
(3) Driver/occupant interview
(8) Other (specify):
(9) Unknown if belt used

U.S. Department of Transportation
National Highway Traffic Safety Administration

OCCUPANT INJURY FORM

Form Approved
O.M.B. No. 2127-0021
NATIONAL ACCIDENT SAMPLING SYSTEM
CRASHWORTHINESS DATA SYSTEM

1. Primary Sampling Unit Number	48	3. Vehicle Number	01
2. Case Number - Stratum	229K	4. Occupant Number	03 02

INJURY DATA

Record below the actual injuries sustained by this occupant that were identified from the official and unofficial data sources. Remember not to double count an injury just because it was identified from two different sources. If greater than ten injuries have been documented, encode the balance on the Occupant Injury Supplement.

	Source of Injury Data	A.I.S. - 90 Body Region	Type of Anatomic Structure	Specific Anatomic Structure	Level of Injury	A.I.S. Severity	Aspect	Injury Source	Injury Source Confidence Level	Direct/ Indirect Injury	Occupant Area Intrusion Number
1st	5. 2	6. 1	7. 9	8. 02	9. 02	10. 1	11. 5	12. 205	13. 2	14. 1	15. 06
2nd	16. 2	17. 1	18. 9	19. 06	20. 02	21. 1	22. 5	23. 205	24. 2	25. 1	26. 00
3rd	27. 2	28. 7	29. 9	30. 02	31. 02	32. 1	33. 1	34. 205	35. 2	36. 1	37. 00
4th	38. 2	39. 1	40. 6	41. 04 02	42. 02	43. 1	44. 0	45. 205	46. 2	47. 1	48. 00
5th	49. __	50. __	51. __	52. __	53. __	54. __	55. __	56. ___	57. __	58. __	59. __
6th	60. __	61. __	62. __	63. __	64. __	65. __	66. __	67. ___	68. __	69. __	70. __
7th	71. __	72. __	73. __	74. __	75. __	76. __	77. __	78. ___	79. __	80. __	81. __
8th	82. __	83. __	84. __	85. __	86. __	87. __	88. __	89. ___	90. __	91. __	92. __
9th	93. __	94. __	95. __	96. __	97. __	98. __	99. __	100. ___	101. __	102. __	103. __
10th	104. __	105. __	106. __	107. __	108. __	109. __	110. __	111. ___	112. __	113. __	114. __

HS Form 433B (1/96)

This report is authorized by P.L. 89-563, Title 1, Section 106, 108, and 112. While you are not required to respond, your cooperation is needed to make the results of this data collection effort comprehensive, accurate, and timely.

OCCUPANT INJURY DATA

	Source of Injury Data	A.I.S. - 90 Body Region	Type of Anatomic Structure	Specific Anatomic Structure	Level of Injury	A.I.S. Severity	Aspect	Injury Source	Injury Source Confidence Level	Direct/ Indirect Injury	Occupant Area Intrusion Number
11th	—	—	—	— —	— —	—	—	— — —	—	—	— —
12th	—	—	—	— —	— —	—	—	— — —	—	—	— —
13th	—	—	—	— —	— —	—	—	— — —	—	—	— —
14th	—	—	—	— —	— —	—	—	— — —	—	—	— —
15th	—	—	—	— —	— —	—	—	— — —	—	—	— —
16th	—	—	—	— —	— —	—	—	— — —	—	—	— —
17th	—	—	—	— —	— —	—	—	— — —	—	—	— —
18th	—	—	—	— —	— —	—	—	— — —	—	—	— —
19th	—	—	—	— —	— —	—	—	— — —	—	—	— —
20th	—	—	—	— —	— —	—	—	— — —	—	—	— —
21st	—	—	—	— —	— —	—	—	— — —	—	—	— —
22nd	—	—	—	— —	— —	—	—	— — —	—	—	— —
23rd	—	—	—	— —	— —	—	—	— — —	—	—	— —
24th	—	—	—	— —	— —	—	—	— — —	—	—	— —
25th	—	—	—	— —	— —	—	—	— — —	—	—	— —

OCCUPANT INJURY CLASSIFICATION

Body Region

(1) Head
(2) Face
(3) Neck
(4) Thorax
(5) Abdomen
(6) Spine
(7) Upper Extremity
(8) Lower Extremity
(9) Unspecified

Type of Anatomic Structure

(1) Whole Area
(2) Vessels
(3) Nerves
(4) Organs (includes Muscles/ligaments)
(5) Skeletal (includes joints)
(6) Head - LOC
(9) Skin

Specific Anatomic Structure

Vessels, Nerves, Organs, Bones, Joints are assigned consecutive two digit numbers beginning with 02.

The exceptions to this rule apply to:

Whole Area
(02) Skin - Abrasion
(04) Skin - Contusion
(06) Skin - Laceration
(08) Skin - Avulsion
(10) Amputation
(20) Burn
(30) Crush
(40) Degloving
(50) Injury - NFS
(90) Trauma, other than mechanical

Head - LOC
(02) Length of LOC

(04) Level
(06) of
(08) Consciousness

(10) Concussion

Spine
(02) Cervical
(04) Thoracic
(06) Lumbar

Level of Injury

Specific injuries are assigned consecutive two-digit numbers beginning with 02.

To the extent possible, within the organizational framework of the AIS, 00 is assigned to an injury NFS as to severity or where only one injury is given in the dictionary for that anatomic structure. 99 is assigned to any injury NFS as to lesion or severity.

Abbreviated Injury Scale

(1) Minor Injury
(2) Moderate Injury
(3) Serious Injury
(4) Severe Injury
(5) Critical Injury
(6) Maximum (untreatable)
(7) Injured, unknown severity

Aspect

(1) Right
(2) Left
(3) Bilateral
(4) Central
(5) Anterior
(6) Posterior
(7) Superior
(8) Inferior
(9) Unknown
(0) Whole region

SOURCE OF INJURY DATA

OFFICIAL RECORDS
(1) Autopsy records with or without hospital/medical records
(2) Hospital/medical records other than emergency room (e.g., discharge summary)
(3) Emergency room records only (including associated X-rays or other lab reports)
(4) Private physician, walk-in or emergency clinic

UNOFFICIAL RECORDS
(5) Lay coroner report
(6) E.M.S. personnel
(7) Interviewee
(8) Other source (specify):

(9) Police

INJURY SOURCE CONFIDENCE LEVEL

(1) Certain
(2) Probable
(3) Possible
(9) Unknown

DIRECT/INDIRECT INJURY

(1) Direct contact injury
(2) Indirect contact injury
(3) Noncontact injury
(7) Injured, unknown source

INJURY SOURCES

FRONT
(001) Windshield
(002) Mirror
(003) Sunvisor
(004) Steering wheel rim
(005) Steering wheel hub/spoke
(006) Steering wheel (combination of codes 004 and 005)
(007) Steering column, transmission selector lever, other attachment
(008) Cellular telephone or CB radio
(009) Add on equipment (e.g., tape deck, air conditioner)
(010) Left instrument panel and below
(011) Center instrument panel and below
(012) Right instrument panel and below
(013) Glove compartment door
(014) Knee bolster
(015) Windshield including one or more of the following: front header, A (A1/A2)-pillar, instrument panel, mirror, or steering assembly (driver side only)
(016) Windshield including one or more of the following: front header, A (A1/A2)-pillar, instrument panel, or mirror (passenger side only)
(017) Windshield reinforced by exterior object (specify)

(019) Other front object (specify):

LEFT SIDE
(051) Left side interior surface, excluding hardware or armrests
(052) Left side hardware or armrest
(053) Left A (A1/A2)-pillar
(054) Left B-pillar
(055) Other left pillar (specify):

(056) Left side window glass
(057) Left side window frame
(058) Left side window sill
(059) Left side window glass including one or more of the following: frame, window sill, A (A1/A2)-pillar, B-pillar, or roof side rail.
(060) Other left side object (specify):

RIGHT SIDE
(101) Right side interior surface, excluding hardware or armrests
(102) Right side hardware or armrest
(103) Right A (A1/A2)-pillar
(104) Right B-pillar
(105) Other right pillar (specify):

(106) Right side window glass
(107) Right side window frame
(108) Right side window sill
(109) Right side window glass including one or more of the following: frame, window sill, A (A1/A2)-pillar, B-pillar, or roof side rail.
(110) Other right side object (specify):

INTERIOR
(151) Seat, back support
(152) Belt restraint webbing/buckle
(153) Belt restraint B-pillar or door frame attachment point
(154) Other restraint system component (specify):

(155) Head restraint system
(160) Other occupants (specify):

(161) Interior loose objects
(162) Child safety seat (specify):

(163) Other interior object (specify):

AIR BAG
(170) Air bag-driver side
(171) Air bag-driver side and eyewear
(172) Air bag-driver side and jewelry
(173) Air bag-driver side and object held
(174) Air bag-driver side and object in mouth
(175) Air bag compartment cover-driver side
(176) Air bag compartment cover-driver side and eyewear
(177) Air bag compartment cover-driver side and jewelry
(178) Air bag compartment cover-driver side and object held
(179) Air bag compartment cover-driver side and object in mouth
(180) Air bag-passenger side
(181) Air bag-passenger side and eyewear
(182) Air bag-passenger side and jewelry
(183) Air bag-passenger side and object held
(184) Air bag-passenger side and object in mouth
(185) Air bag compartment cover-passenger side
(186) Air bag compartment cover-passenger side and eyewear
(187) Air bag compartment cover-passenger side and jewelry
(188) Air bag compartment cover-passenger side and object held
(189) Air bag compartment cover-passenger side and object in mouth
(190) Other air bag (specify)

(195) Other air bag compartment cover (specify)

ROOF
(201) Front header
(202) Rear header
(203) Roof left side rail
(204) Roof right side rail
(205) Roof or convertible top

FLOOR
(251) Floor (including toe pan)
(252) Floor or console mounted transmission lever, including console
(253) Parking brake handle
(254) Foot controls including parking brake

REAR
(301) Backlight (rear window)
(302) Backlight storage rack, door, etc.
(303) Other rear object (specify):

ADAPTIVE (ASSISTIVE) DRIVING EQUIPMENT
(401) Hand controls for braking/acceleration
(402) Steering control devices (attached to OEM steering wheel)
(403) Steering knob attached to steering wheel
(405) Replacement steering wheel (i.e., reduced diameter)
(406) Joy stick steering controls
(407) Wheelchair tie-downs
(408) Modification to seat belts, (specify):
(409) Additional or relocated switches, (specify):

(410) Raised roof
(411) Wall mounted head rest (used behind wheel chair)
(412) Other adaptive device (specify):

EXTERIOR of OCCUPANT'S VEHICLE
(451) Hood
(452) Outside hardware (e.g., outside mirror, antenna)
(453) Other exterior surface or tires (specify):

(454) Unknown exterior objects

EXTERIOR OF OTHER MOTOR VEHICLE
(501) Front bumper
(502) Hood edge
(503) Other front of vehicle (specify):

(504) Hood
(505) Hood ornament
(506) Windshield, roof rail, A-pillar
(507) Side surface
(508) Side mirrors
(509) Other side protrusions (specify):

(510) Rear surface
(511) Undercarriage
(512) Tires and wheels
(513) Other exterior of other motor vehicle (specify):

(514) Unknown exterior of other motor vehicle

OTHER VEHICLE OR OBJECT IN THE ENVIRONMENT
(551) Ground
(598) Other vehicle or object (specify):

(599) Unknown vehicle or object

NONCONTACT INJURY
(601) Fire in vehicle
(602) Flying glass
(603) Other noncontact injury source (specify):
(604) Air bag exhaust gases
(697) Injured, unknown source

OFFICIAL INJURY DATA — SOFT TISSUE INJURIES

Restrained?

__ No

__ Yes

Blood Alcohol Level (mg/dl)

BAL = 0
+cannabinoids

Glasgow Coma Scale Score

GCSS = 14

Units of Blood Given

Units = 0

Arterial Blood Gases

pH = __.__

PO_2 = ___

PCO_2 ___

HCO_3 ___

Indicate the Location, Specific Anatomic Structure, Detail (size, depth, fracture type, head injury clinical signs and neurological deficits), and Source of all injuries indicated by official sources (or from PAR or other unofficial sources if medical records and interviewee data are unavailable.)

abrasions/3-4cm laceration top of head

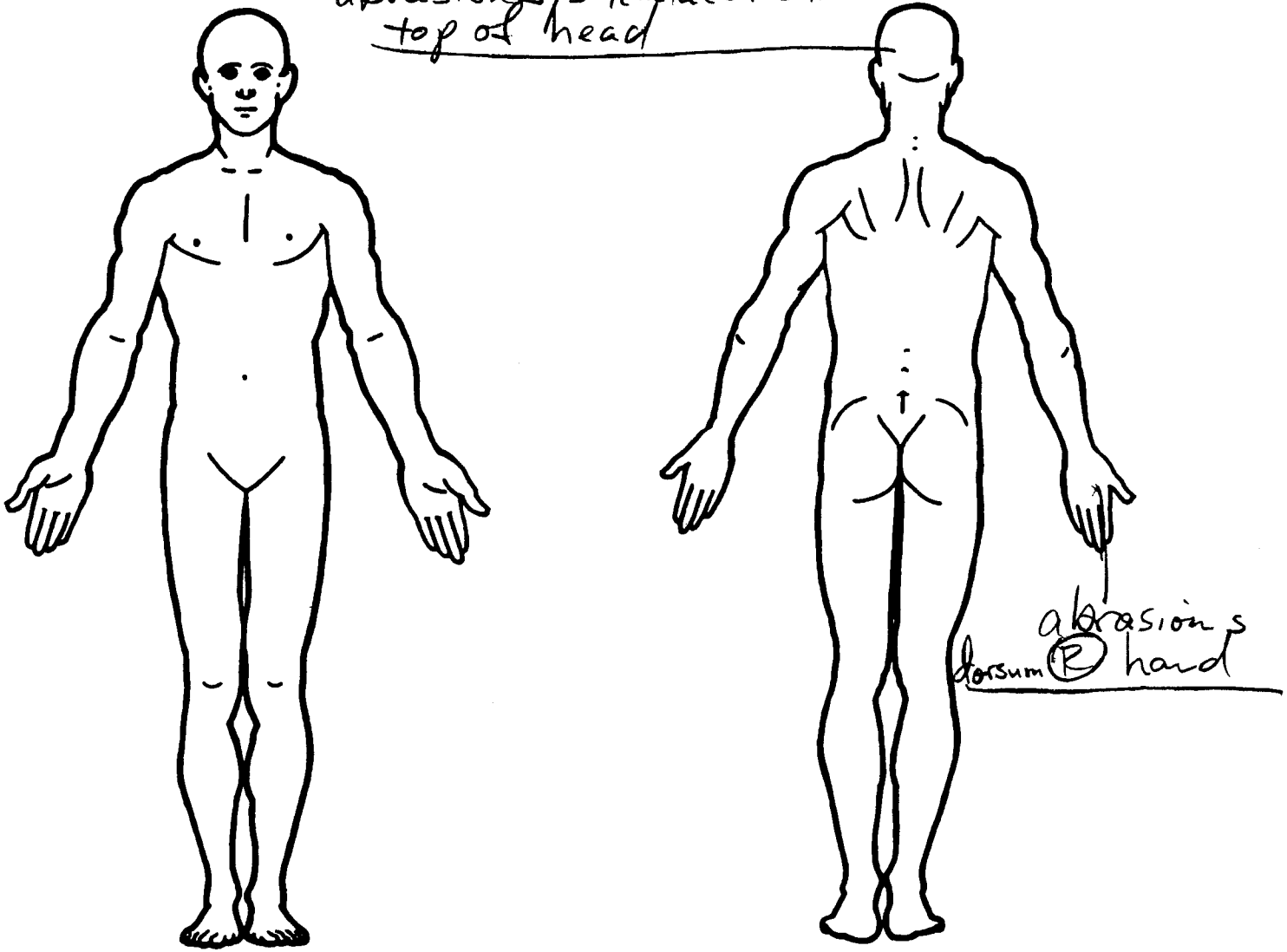

OFFICIAL INJURY DATA — SKELETAL INJURIES

Indicate the Location, Specific Anatomic Structure, Detail (size, depth, fracture type, head injury clinical signs and neurological deficits), and Source of all injuries indicated by official sources (or from PAR or other unofficial sources if medical records and interviewee data are unavailable.)

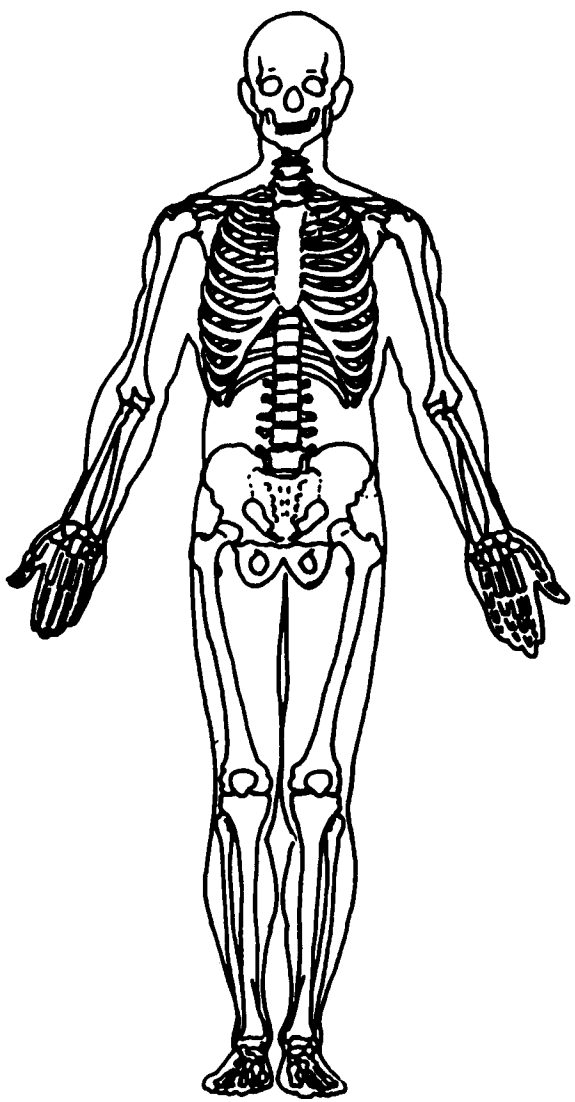

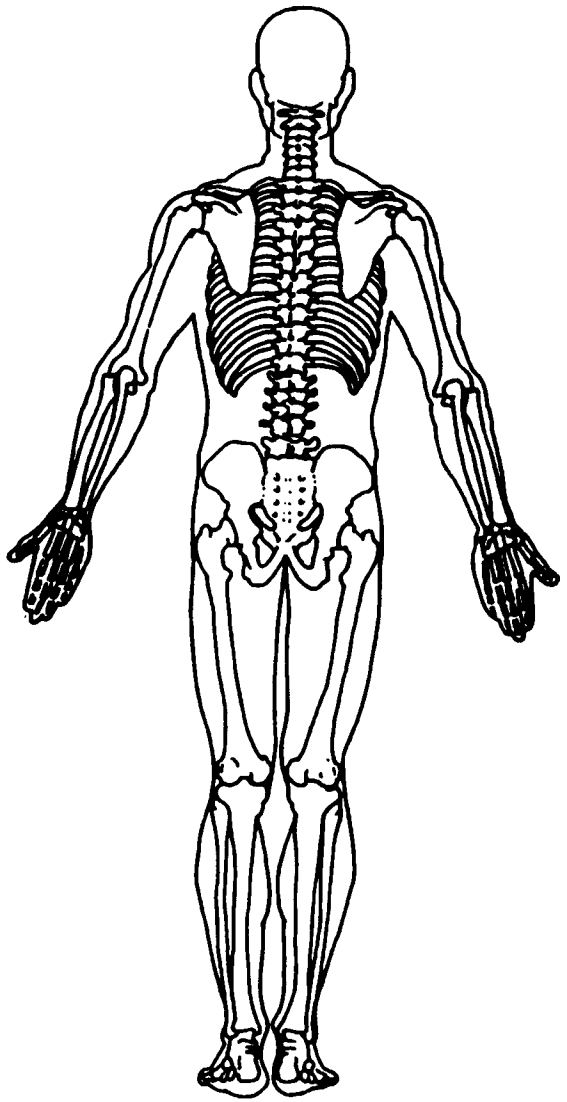

OFFICIAL INJURY DATA — INTERNAL INJURIES

Indicate the Location, Specific Anatomic Structure, Detail (size, depth, fracture type, head injury clinical signs and neurological deficits), and Source of all injuries indicated by official sources (or from PAR or other unofficial sources if medical records and interviewee data are unavailable.)

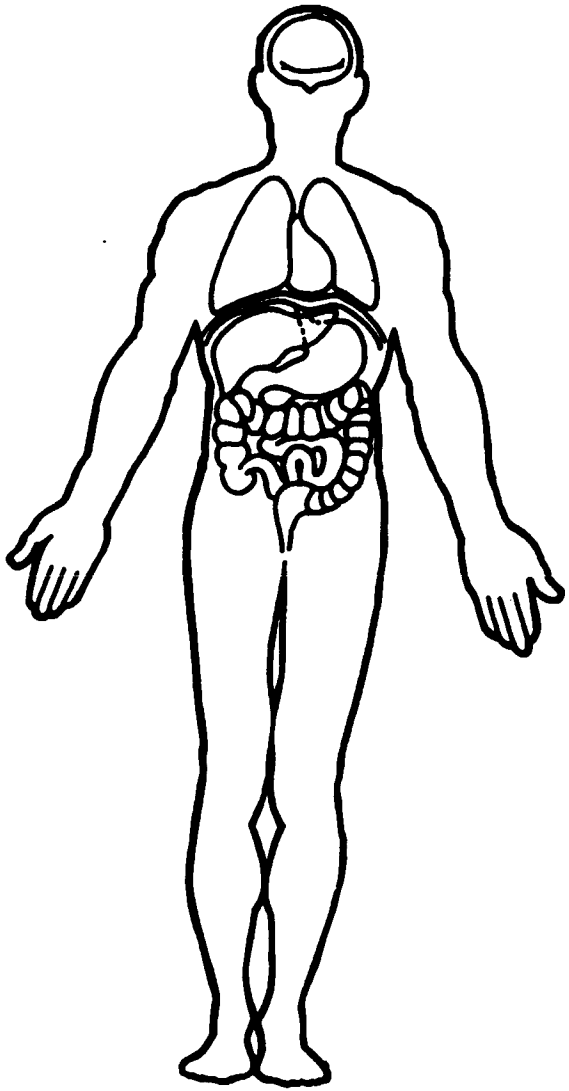

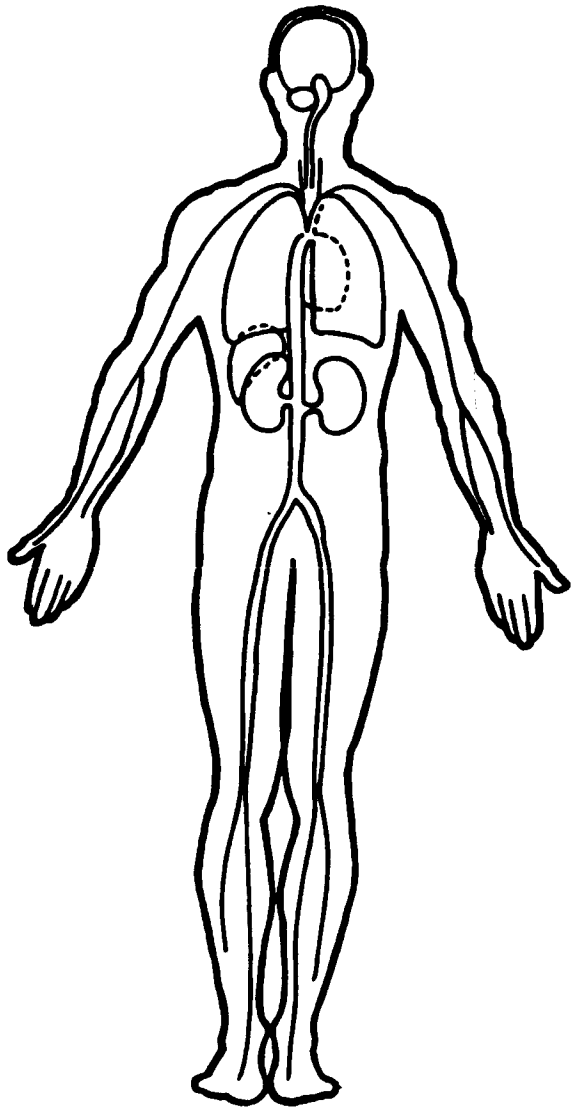

final

48229K00000011[redacted]969.040000000000001193000000001[redacted]96[redacted]97[redacted]97[redacted]9615917500
00116500018543915 0107
48229K00010012[redacted]969.0410000000000114T3100N
48229K01000021   9.04 00000000091494011 4JT3VN29V0M[redacted]0112111300002[redacted]2
121121200001010106 4198
48229K01000022   9.04 000000000103030001700030301161110099799700005999 999 9
999999990999 7301
48229K01000031   9.04 0000000000131 00TDD003
                   9982502651380100070106010100 1000
48229K01000041   9.04 000000000983331100000122222021222220146666606111111 01
48229K01000042   9.04 000000000111541121541131541110612111311111411111711131
11131411   210000013500010
48229K01010051   9.04 0000000002721700571110000004404111000004100000000000 0
0000000000030116231000000000000331050900000000815101 1
48229K01010161   9.04 0000000002140652412052105
48229K01010261   9.04 0000000002140684312052105
48229K01010361   9.04 0000000002190402122052105
48229K01010461   9.04 0000000002190202122052105
48229K01010561   9.04 0000000002297402122052105
48229K01010661   9.04 0000000002790602126022300
48229K01010761   9.04 0000000002890202120101100
48229K01010861   9.04 0000000002160202202052105
48229K01020051   9.04 0000000002421650522130000009404111000004100000000000 0
00000000000301162310000000000003310509000000000514101 1
48229K01020161   9.04 0000000002160202202042109
48229K01020261   9.04 0000000002190602112042109
48229K01020361   9.04 0000000002190402112042109
48229K01020461   9.04 0000000002890602110122100
48229K01020561   9.04 0000000002890202110122100
48229K01030051   9.04 0000000002321150452210000002400001000000100000000000 0
00000000000307110110000000000003310512000000000414101 1
48229K01030161   9.04 0000000002190202152052100
48229K01030261   9.04 0000000002190602152052100
48229K01030361   9.04 0000000002790202112052100
48229K01030461   9.04 0000000002160402102052100
48229K00000066   9.04 000000000CAR-ROLLOVER
48229K00000171   9.04 000000000V1 WAS SOUTBOUND ON A FOUR LANE DIVIDED INTER
TATE. V1 WAS TRAVELING IN THE
48229K00000271   9.04 000000000

48229K00000371   9.04 000000000LEFT LANE WHEN ITS LEFT REAR TIRE BLEW OUT.
HE FRICTION CAUSED BY THE FLAT
48229K00000471   9.04 000000000

48229K00000571   9.04 000000000RESULTED IN V1 ROLLING OVER TO THE RIGHT. V1
UNDERWENT THREE QUARTER TURNS
48229K00000671   9.04 000000000

48229K00000771   9.04 000000000BEFORE COMING TO FINAL REST ON ITS LEFT PLANE
ON THE RIGHT SHOULDER EDGE OF
48229K00000871   9.04 000000000

48229K00000971   9.04 000000000THE SOUTHBOUND LANES. THE RESTRAINED DRIVER
ND RESTRAINED FRONT SEAT
48229K00001071   9.04 000000000

48229K00001171   9.04 000000000PASSENGER WERE TRANSPORTED AND HOSPITALIZED.
THE UNRESTRAINED REAR SEAT
48229K00001271   9.04 000000000

48229K00001371   9.04 000000000PASSENGER WAS TRANSPORTED AND HOSPITALIZED AT
THE SAME LOCAL TRAUMA CENTER AS
48229K00001471   9.04 000000000

48229K00001571   9.04 000000000OCCUPANTS 1 AND 2.

48229K00000181   9.04 0000000001 COMPACT UTILITY 91/TOYOTA/4-RUNNER   TO
     MODERATE   NONE
48229K00000191   9.04 0000000001   DR   FL   LAP/SHOUL BRAIN
UBDURAL   4 ROOF
48229K00000291   9.04 000000000   MANUAL

48229K00000391   9.04 000000000

48229K00000491   9.04 0000000001   PASS   FR   LAP/SHOUL BRAIN
OC   2 ROOF SIDE RAIL
48229K00000591   9.04 000000000   MANUAL

48229K00000691   9.04 000000000

48229K00000791   9.04 0000000001   PASS   2ND L   NONE   BRAIN
OC   2 ROOF
48229K99999999000000000000000000000000000000000000000000000000000000000001000
00000000000000

OCCUPANT ASSESSMENT Vehicle: 1 Occupant: 3
11
INTRA ERRORS

0HH0021 2 Given OCCUPANT AGE 0A05 and OCCUPANT SEX 0A06, OCCUPANT HEIGHT
HH0022 0A07 is questionable. See Table A1.

01

PSU48 ERROR SUMMARY SCREEN [redacted]97
CASE 229K
CURRENT VERSION: 9.04

FORM NAME	NUMBER OF DOLLAR SIGNS	NUMBER OF LEVEL 1 ERRORS	NUMBER OF LEVEL 2 ERRORS	VERSION NUMBER CONSISTENT
Accident	0	0	0	Y
General Vehicle	0	0	0	Y
Vehicle Exterior	0	0	0	Y
Vehicle Interior	0	0	0	Y
Occupant Assessment	0	0	1	Y
Occupant Injury	0	0	0	Y
Total Inter Errors		0	0	
Total Case Errors	0	0	1	

0

U.S. Department of Transportation
National Highway Traffic Safety Administration

SLIDE INDEX

NATIONAL ACCIDENT SAMPLING SYSTEM
CRASHWORTHINESS DATA SYSTEM

Primary Sampling Unit Number 4 8 Case Number—Stratum 2 2 9 K

Slide No.	Vehicle No.	Direction of Picture	Description of Slide Subject Matter
1-4	1	S	Path of travel.
5-8	1	S	Point of rollover initiation.
9-13	1	S	Continuing path of travel.
14	1	S	Final rest.
15-18	1	N	Opposite views.
19-56	1		Exterior views.
57-85	1		Interior views.

HS Form 434B (1/96)

Slide No.	Vehicle No.	Direction of Picture	Description of Slide Subject Matter

☆U.S. GOVERNMENT PRINTING OFFICE: 1996 [redacted]

PSU 48-229K (1996) # 1
Best Available

PSU 48-229K (1996) # 2
Best Available

PSU 48-229K (1996) # 3
Best Available

PSU 48-229K (1996) # 4
Best Available

PSU 48-229K (1996) # 5
Best Available

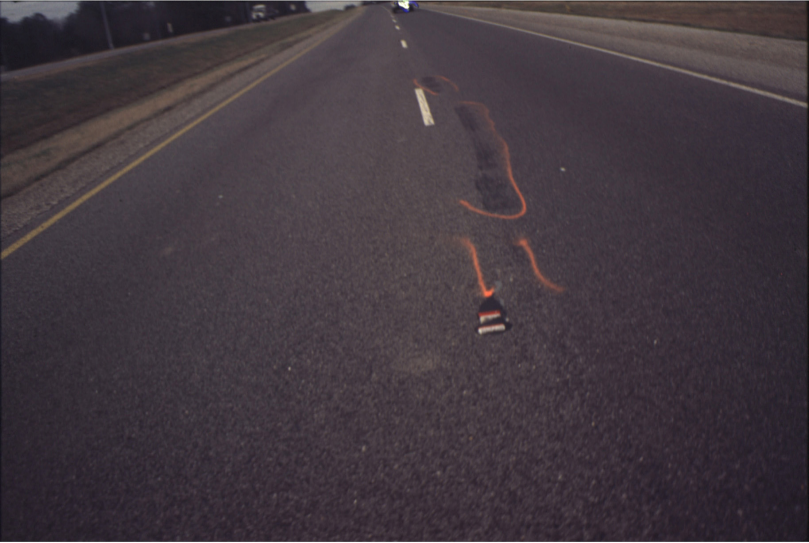

PSU 48-229K (1996) # 6
Best Available

PSU 48-229K (1996) # 7
Best Available

PSU 48-229K (1996) # 8
Best Available

PSU 48-229K (1996) # 9
Best Available

PSU 48-229K (1996) # 10
Best Available

PSU 48-229K (1996) # 11
Best Available

PSU 48-229K (1996) # 12
Best Available

PSU 48-229K (1996) # 13
Best Available

PSU 48-229K (1996) # 14
Best Available

PSU 48-229K (1996) #15
Best Available

PSU 48-229K (1996) #16
Best Available

PSU 48-229K (1996) # 17
Best Available

PSU 48-229K (1996) # 18
Best Available

PSU 48-229K (1996) #19
Best Available

PSU 48-229K (1996) # 20
Best Available

PSU 48-229K (1996) # 21
Best Available

PSU 48-229K (1996) # 22
Best Available

PSU 48-229K (1996) # 23
Best Available

PSU 48-229K (1996) # 24
Best Available

PSU 48-229K (1996) # 25
Best Available

PSU 48-229K (1996) # 26
Best Available

PSU 48-229K (1996) # 27
Best Available

PSU 48-229K (1996) # 28
Best Available

PSU 48-229K (1996) # 29
Best Available

PSU 48-229K (1996) # 30
Best Available

PSU 48-229K (1996) # 31
Best Available

PSU 48-229K (1996) # 32
Best Available

PSU 48-229K (1996) # 33
Best Available

PSU 48-229K (1996) # 34
Best Available

PSU 48-229K (1996) # 35
Best Available

PSU 48-229K (1996) # 36
Best Available

PSU 48-229K (1996) # 37
Best Available

PSU 48-229K (1996) # 38
Best Available

PSU 48-229K (1996) # 39
Best Available

PSU 48-229K (1996) # 40
Best Available

PSU 48-229K (1996) # 41
Best Available

PSU 48-229K (1996) # 42
Best Available

PSU 48-229K (1996) # 43
Best Available

PSU 48-229K (1996) # 44
Best Available

PSU 48-229K (1996) # 45
Best Available

PSU 48-229K (1996) # 45
Best Available

PSU 48-229K (1996) # 47
Best Available

PSU 48-229K (1996) #48

PSU 48-229K (1996) #49

PSU 48-229K (1996) #50

PSU 48-229K (1996) #51

PSU 48-229K (1996) #52

PSU 48-229K (1996) #53

PSU 48-229K (1996) #54

PSU 48-229K (1996) # 55
Best Available

PSU 48-229K (1996) #56

PSU 48-229K (1996) # 57
Best Available

PSU 48-229K (1996) # 58
Best Available

PSU 48-229K (1996) # 59
Best Available

PSU 48-229K (1996) # 60
Best Available

PSU 48-229K (1996) # 61
Best Available

PSU 48-229K (1996) # 62
Best Available

PSU 48-229K (1996) # 63
Best Available

PSU 48-229K (1996) # 64
Best Available

PSU 48-229K (1996) # 65
Best Available

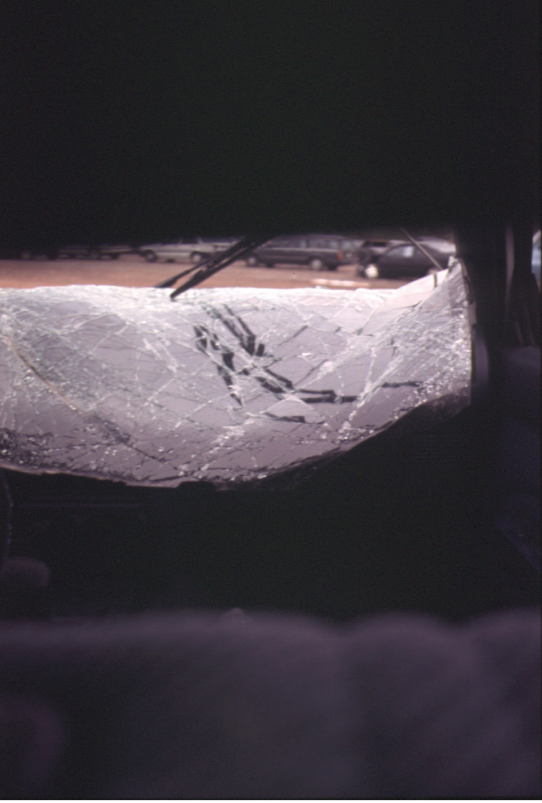

PSU 48-229K (1996) # 66
Best Available

PSU 48-229K (1996) #67

PSU 48-229K (1996) #68

PSU 48-229K (1996) #69

PSU 48-229K (1996) #70

PSU 48-229K (1996) #71

PSU 48-229K (1996) #72

PSU 48-229K (1996) #73

PSU 48-229K (1996) #74

PSU 48-229K (1996) #75

PSU 48-229K (1996) #76

PSU 48-229K (1996) #77

PSU 48-229K (1996) #78

PSU 48-229K (1996) #79

PSU 48-229K (1996) #80

PSU 48-229K (1996) #81

PSU 48-229K (1996) #82

PSU 48-229K (1996) #83

PSU 48-229K (1996) #84

PSU 48-229K (1996) #85