Crash 3

Technical Manual

U.S. DEPARTMENT OF TRANSPORTATION
NATIONAL HIGHWAY TRAFFIC SAFETY ADMINISTRATION
NATIONAL CENTER FOR STATISTICS AND ANALYSIS
ACCIDENT INVESTIGATION DIVISION

PREFACE

The CRASH 3 technical manual has been compiled from earlier crash documentation in an effort to provide a convenient and useful reference to the program user.

The Accident Investigation Division wishes to acknowledge the contribution of the Southwest Research Institute (SWRI) staff M. Ray and M. Scofield who participated in the preparation of this material.

CRASH 3 program users should direct their hardware and software related questions to Transportation Systems Center (TSC) (617-494-2614). Questions on technical problems related to the CRASH 3 algorithm should be addressed to NHTSA CRASH 3 Program Manager (202-366-5393).

Nicholas G. Tsongos
CRASH Program Manager
July 1986.

ACKNOWLEDGEMENTS

The authors would like to thank Dr. R. A. Smith of the U.S. Naval Academy for his comments during the compilation of this document.

The following source materials were used in the preparation of this document and are generally not referenced in the following document. The numbers below also correspond to the reference numbers in the referencing section.

1. McHenry, R. R., "User's Manual for the CRASH Computer Program," February 1976, NTIS #PB 252115.

2. McHenry, R. R., "Extension and Refinements of the CRASH Computer Program Part I - Analytical Reconstruction of Highway Accidents," February 1976, NTIS #PB 252114.

3. McHenry, R. R., "Extensions and Refinements of the CRASH Computer Program - Evaluation of Reconstruction Techniques for Highway Accidents," February 1976, NTIS #PB 252116.

4. McHenry, R. R. and Lynch, J. P., "CRASH II User's Manual," November 1976, NTIS #PB 262822.

5. McHenry, R. R. and Lynch, J. P., "Mathematical Reconstruction of Highway Accidents - Further Extensions and Refinements of the CRASH Computer Program," November 1976, DOT-HS-802-287, Calspan Report #ZQ-5708-V-5.

6. McHenry, R. R. and Lynch, James P., "CRASH2A User's Manual," (unpublished), Contract DOT-HS-6-01442, Calspan Report No. ZP-6003-V-2.

7. McHenry, R. R. and Lynch, James P., "Revision of the CRASH2 Computer Program," NTIS Publication No. PB-80-134505.

8. McHenry, R. R. and McHenry, Brian G., "National Crash Severity Study--Quality Control, Task 5. Analysis to Refine Spinout Aspects of CRASH," NTIS Publication No. PB-81-180507, January 1981.

9. Campbell, K. L., et al., "Training Materials for Accident Reconstruction," Volume I - Reference Manual, Contract DOT-HS-8-01968; unpublished.

10. Guenther, D. and Monk, M., "Update of CRASH2 Computer Model Damage Tables," National Highway Traffic Safety Administration, Vehicle Research and Test Center Project SRL-16. Final Report to be published, May 1982.

11. Oppenheim, T., "CRASH2 Maintenance," Contract DTNH22-80-C-07110, Final Report, Two Volumes, NTIS No. PB-81-246167 and No. PB-81-246175.

12. "CRASH3 User's Guide and Technical Manual," Publication No. DOT-HS-805732, National Highway Traffic Safety Administration, Dept. of Transportation, Washington, DC, February 1981; revised April 1982.

TABLE OF CONTENTS

Section		Page
1.	USER'S GUIDE	
1.1	INTRODUCTION	1.1
1.2	APPLICABILITY AND LIMITATIONS	1.3
1.2.1	Introduction	1.3
1.2.2	Basic CRASH3 Assumptions	1.6
1.2.3	Nonapplicable Accident Types	1.9
1.3	SOLUTION PROCEDURES	1.15
1.3.1	Introduction	1.15
1.3.2	Process Flow Diagrams	1.16
1.3.3	Example Solution Procedures	1.25
1.3.4	CRASH Program Summary Form	1.28
1.4	MENU RESPONSES	1.33
1.4.1	Introduction	1.33
1.4.2	Preliminary Questions	1.35
	QUESTION *: Options	1.36
	QUESTION 1: Title	1.42
	QUESTION 2: Vehicle Size Classifications and Weights	1.43
	QUESTIONS 3 AND 4: Collision Deformation Classification and Direction of Principal Force	1.47
	QUESTION 5: Vehicle Stiffness Categories	1.54
1.4.3	Trajectory Description Questions	1.59
	QUESTION 6: Trajectory Data	1.62
	QUESTION 7: Rest Positions	1.65
	QUESTION 8: Impact Positions	1.67
	QUESTIONS 9 AND 10: Pre-Impact Side-Slip Angles	1.69
	QUESTION 11: Sustained Contact	1.73
	QUESTIONS 12 AND 19: Vehicle Skidding	1.75

TABLE OF CONTENTS (Continued)

Section		Page
	QUESTIONS 13 AND 20: End of Rotational and/or Lateral Skidding...	1.77
	QUESTIONS 14 AND 21: End of Rotational and/or Lateral Skidding Position.....	1.82
	QUESTIONS 15 AND 22: Presence of a Curved Trajectory.....	1.84
	QUESTIONS 16 AND 23: Intermediate Point on a Curved Trajectory.....	1.87
	QUESTIONS 17 AND 24: Vehicle Rotation Direction.....	1.88
	QUESTIONS 18 AND 25: Greater Than 360 Degree Rotation.....	1.89
	QUESTION 26: Nominal Tire-Ground Friction Coefficient.....	1.90
	QUESTION 27: Rolling Resistance Option.....	1.93
	QUESTIONS 28 AND 29: Rolling Resistance Entry - Option 1.....	1.96
	QUESTIONS 30 AND 31: Rolling Resistance Entry - Option 2.....	1.102
1.4.4	Trajectory Simulation Questions.....	1.106
	QUESTION 32: Trajectory Simulation..	1.109
	QUESTIONS 33 AND 34: Steer Angles...	1.110
	QUESTION 35: Terrain Boundary.....	1.111
	QUESTION 36: Boundary Points.....	1.112
	QUESTION 37: Secondary Friction Coefficient.....	1.113
1.4.5	Vehicle Damage Questions.....	1.114
	QUESTION 38: Damage Data.....	1.120
	QUESTIONS 39 AND 45: Side Damage Width.....	1.121
	QUESTIONS 40 AND 46: Side Damage Depth Profile.....	1.122
	QUESTIONS 41 AND 47: Side Reference Point.....	1.124

TABLE OF CONTENTS (Continued)

Section		Page
	QUESTIONS 42 AND 48: End Damage Width	1.126
	QUESTIONS 43 AND 49: End Damage Depth Profile	1.127
	QUESTIONS 44 AND 50: End Reference Point	1.129
	QUESTION *: Save Input (MICRO-CRASH ONLY)	1.131
1.5	CRASH GRAPHICS PROGRAM	1.133
1.5.1	Introduction	1.133
1.5.2	Starting the Program	1.135
1.5.3	Trajectory Calculations	1.137
1.5.4	Graphics Options	1.146
1.6	DIFFERENCES WITH THE MAINFRAME VERSION	1.155
1.7	SAMPLE RUNS	1.165
1.7.1	Introduction	1.165
1.7.2	Sample Run 1	1.166
	Sample Run 2	1.185
	Sample Run 3	1.196
	Sample Run 4	1.207
1.8	INTERPRETATION OF CRASH3 RUN DATA	1.219
2.	MATHEMATICAL FOUNDATIONS	
2.1	INTRODUCTION	2.1
2.2	DAMAGE ANALYSIS	2.5
2.2.1	Central Collisions	2.5
2.2.2	Non-Central Collisions	2.16
2.2.3	Absorbed Energy	2.21

TABLE OF CONTENTS (Continued)

Section		Page
2.2.4	Moment Arms of Resultant Collision Force on Vehicles 1 and 2	2.32
2.2.5	Damage Interpretation in Oblique Collisions Correction Factor for Crush Resistance	2.34
2.3	TRAJECTORY ANALYSIS	2.39
2.3.1	Alternatives Considered	2.39
2.3.2	Rotating Skid	2.40
2.3.3	Estimating Vehicle Trajectories from Scene Evidence	2.55
2.3.4	Adjusting the Separation Angle	2.68
2.3.5	Drag Factor in Non-Rotating Skids	2.72
2.3.6	Drag Factor in Rollout	2.76
2.4	TRAJECTORY SIMULATION	2.79
2.4.1	Introduction	2.79
2.4.2	Position Errors	2.84
2.4.3	Orientation Errors	2.87
2.4.4	Iterative Adjustments of Independent Variables	2.87
2.5	ACCURACY AND SENSITIVITY	2.95
2.5.1	Introduction	2.95
2.5.2	Sensitivity	2.96
2.5.3	Accuracy	2.103
3.	PROGRAMMER'S GUIDE	
3.1	INTRODUCTION	3.1
3.2	MAINFRAME COMPUTER SYSTEMS	3.1
3.2.1	Source Language	3.1
3.2.2	Storage Requirements	3.2
3.2.3	Compilation	3.7
3.2.4	Subroutines Required	3.7
3.2.5	Executing the Program	3.7

LIST OF FIGURES

Figure		Page
1.1	COMPARISON OF TRUE VERSUS CRASH3 DAMAGE ESTIMATES OF ΔV FOR 53 STAGED COLLISIONS	1.4
1.2	ELIGIBLE CRASH3 VEHICLES	1.18
1.3	SINGLE VEHICLE USE OF CRASH	1.19
1.4	TWO VEHICLE USE OF CRASH	1.20
1.5	SINGLE VEHICLE DAMAGE ONLY CRASH RUN	1.21
1.6	SINGLE VEHICLE TRAJECTORY CRASH RUN	1.22
1.7	TWO VEHICLE DAMAGE ONLY CRASH RUN	1.23
1.8	TWO VEHICLE TRAJECTORY CRASH RUN	1.24
1.9	CRASH PROGRAM SUMMARY FORM	1.29
1.10	PRINCIPAL DIRECTION OF FORCE	1.52
1.11	SPACE-FIXED COORDINATE SYSTEM	1.63
1.12	VEHICLE POSITION EVIDENCE	1.66
1.13	SIDE-SLIP ANGLE	1.70
1.14	SAMPLE CASE DEMONSTRATING PRE-CRASH SLIP ANGLES AND PARALLEL VELOCITY VECTORS	1.72
1.15	EXAMPLE OF END-OF-ROTATION SITUATION	1.79
1.16	EXAMPLE OF END-OF-LATERAL SKIDDING SITUATION	1.80

TABLE OF CONTENTS (Continued)

Section		Page
3.3	PERSONAL COMPUTER SYSTEMS	3.11
3.3.1	Introduction	3.11
3.3.2	Installation and Execution	3.12
3.3.3	CRGRAF Graphic Program	3.18
3.4	CRASH3 LOGIC	3.27
3.5	DATA CONSISTENCY CHECKS	3.35
3.5.1	Spinout Error	3.35
3.5.2	Rotation/Moment-Arm Compatibility Checks	3.39
3.5.3	Incompatible Heading Angle and PDOF	3.41
3.5.4	Sustained Contact	3.44
3.5.5	Common Velocity Check	3.50
APPENDIX A:	DEFINITIONS OF SYMBOLS	A.1
APPENDIX B:	COLLISION DEFORMATION CLASSIFICATION - SAE J224 MAR 80	B.1
APPENDIX C:	OLDMISS USERS GUIDE	C.1
C.1	Overview	C.1
C.2	Data Requirements	C.3
C.3	Detailed Instructions	C.7
	OLDMISS Program Sample Run	C.13

LIST OF FIGURES

Figure		Page
1.1	COMPARISON OF TRUE VERSUS CRASH3 DAMAGE ESTIMATES OF ΔV FOR 53 STAGED COLLISIONS	1.4
1.2	ELIGIBLE CRASH3 VEHICLES	1.18
1.3	SINGLE VEHICLE USE OF CRASH	1.19
1.4	TWO VEHICLE USE OF CRASH	1.20
1.5	SINGLE VEHICLE DAMAGE ONLY CRASH RUN	1.21
1.6	SINGLE VEHICLE TRAJECTORY CRASH RUN	1.22
1.7	TWO VEHICLE DAMAGE ONLY CRASH RUN	1.23
1.8	TWO VEHICLE TRAJECTORY CRASH RUN	1.24
1.9	CRASH PROGRAM SUMMARY FORM	1.29
1.10	PRINCIPAL DIRECTION OF FORCE	1.52
1.11	SPACE-FIXED COORDINATE SYSTEM	1.63
1.12	VEHICLE POSITION EVIDENCE	1.66
1.13	SIDE-SLIP ANGLE	1.70
1.14	SAMPLE CASE DEMONSTRATING PRE-CRASH SLIP ANGLES AND PARALLEL VELOCITY VECTORS	1.72
1.15	EXAMPLE OF END-OF-ROTATION SITUATION	1.79
1.16	EXAMPLE OF END-OF-LATERAL SKIDDING SITUATION	1.80

LIST OF FIGURES (Continued)

Figure		Page
1.17	EFFECTS OF CURVED TRAJECTORY ON INDICATED DIRECTION OF MOTION AT SEPARATION	1.86
1.18	DAMAGE DIMENSIONS	1.115
1.19	EXAMPLES OF INDUCED DAMAGE	1.119
1.20	FIRST ITERATION TRAJECTORY TABLE, VEHICLE 1	1.138
1.21	FIRST ITERATION TRAJECTORY TABLE, VEHICLE 2	1.139
1.22	TWELFTH ITERATION TRAJECTORY TABLE, VEHICLE 1	1.141
1.23	CONVERGENCE OF MARQUARD TRAJECTORY ESTIMATES, VEHICLE 1, EXAMPLE 1	1.142
1.24	THIRTEENTH ITERATION TRAJECTORY TABLE, VEHICLE 2	1.144
1.25	FINAL TRAJECTORY TABLE, VEHICLE 1	1.145
1.26	FINAL TRAJECTORY TABLE, VEHICLE 2	1.147
1.27	TRAJECTORY OPTION (OPTION 4 = YES)	1.149
1.28	MULTIPLE EXPOSURE OPTION (OPTION 3 = YES)	1.151
1.29	ILLUSTRATION OF DAMAGE OPTION (OPTION 5 = YES)	1.153
1.30	SCENE SKETCH, EXAMPLE 1	1.167

LIST OF FIGURES (Continued)

Figure		Page
1.31	CRASH SUMMARY FORM, EXAMPLE 1.....	1.168
1.32	FINAL CRGRAF TRAJECTORY TABLES, EXAMPLE 1.....	1.170
1.33	CRGRAF TRAJECTORY PLOT, EXAMPLE 1...	1.171
1.34	CRGRAF DAMAGE PLOT, EXAMPLE 1.....	1.172
1.35	SAMPLE CRASH3 RUN, EXAMPLE 1.....	1.173
1.36	SAMPLE CRASH3 RUN WITH MINIMUM DATA, EXAMPLE 1.....	1.182
1.37	SCENE SKETCH, EXAMPLE 2.....	1.186
1.38	SAMPLE CRASH3 RUN, EXAMPLE 2.....	1.187
1.39	FINAL CRGRAF TRAJECTORY TABLE, EXAMPLE 2.....	1.193
1.40	CRGRAF TRAJECTORY PLOT, EXAMPLE 2...	1.194
1.41	CRGRAF DAMAGE PLOT, EXAMPLE 2.....	1.195
1.42	SCENE SKETCH, EXAMPLE 3.....	1.197
1.43	SAMPLE CRASH3 RUN, EXAMPLE 3.....	1.198
1.44	FINAL CRGRAF TRAJECTORY TABLES, EXAMPLE 3.....	1.204
1.45	CRGRAF TRAJECTORY PLOT, EXAMPLE 3...	1.205
1.46	CRGRAF DAMAGE PLOT, EXAMPLE 3.....	1.206
1.47	SCENE SKETCH, EXAMPLE 4.....	1.208

LIST OF FIGURES (Continued)

Figure		Page
1.48	SAMPLE CRASH3 RUN, EXAMPLE 4.....	1.209
1.49	FINAL CRGRAF TRAJECTORY TABLES, EXAMPLE 4.....	1.216
1.50	CRGRAF TRAJECTORY PLOT, EXAMPLE 4...	1.217
1.51	CRGRAF DAMAGE PLOT, EXAMPLE 4.....	1.218
2.1	SCHEMATIC REPRESENTATION OF CENTRAL COLLISION.....	2.6
2.2	OFFSET FRONTAL COLLISION.....	2.17
2.3	LINEAR CRUSH RESISTANCE.....	2.23
2.4	DAMAGE DIMENSIONS.....	2.26
2.5	APPROXIMATION OF DAMAGE PROFILE WITH STRAIGHT LINE SEGMENTS.....	2.28
2.6	MOMENT ARMS OF RESULTANT COLLISION FORCE.....	2.33
2.7	FORCE COMPONENTS IN OBLIQUE COLLISION.....	2.36
2.8	TIRE FORCES DURING SPINOUT WITH YAWING VELOCITY.....	2.41
2.9	LINEAR AND ANGULAR VELOCITY VS TIME	2.43
2.10	IDEALIZED PLOT OF VELOCITIES VS TIME.....	2.44
2.11	POINTS ON THE SPINOUT TRAJECTORY....	2.56

LIST OF FIGURES (Continued)

Figure		Page
2.12	ADJUSTMENT OF γ_s USING 18 SMAC RUNS	2.70
2.13	γ_s ADJUSTMENT VERSUS θ	2.73
2.14	FRICTION CIRCLE FOR ROLLING RESISTANCE AND SIDE FORCES IN NON-YAWING SKID	2.75
2.15	SCHEMATIC SKETCH OF ERROR CALCULATIONS	2.80
2.16	SCHEMATIC FLOW CHART OF ITERATIVE LOOP	2.90
2.17	COMPARISON OF TRUE VERSUS CRASH3 DAMAGE ESTIMATES OF ΔV FOR 53 STAGED COLLISIONS	2.104
2.18	COMPARISON OF TRUE VERSUS ESTIMATED ΔV FOR 16 STAGED COLLISIONS	2.105
3.1	LAYOUT OF CRASH3 PROGRAM (NON-OVERLAY AND OVERLAY METHODS)	3.4
3.2	JOB CONTROL LANGUAGE TO OVERLAY CRASH3 PROGRAM	3.6
3.3	COMMAND PROCEDURE FOR INTERACTIVE CRASH3	3.8
3.4	SCHEMATIC FLOW CHART OF THE CRASH3 COMPUTER PROGRAM	3.28
3.5	CONCEPTUAL FLOW CHART FOR TYPICAL CRASH3 RUN	3.29

LIST OF FIGURES (Continued)

Figure		Page
3.6	FLOW CHART FOR SUBROUTINE DAMAGE....	3.30
3.7	SUBROUTINE START2 FLOWCHART.....	3.31
3.8	FLOW CHART FOR SUBROUTINE SPIN2.....	3.33
3.9	SUSTAINED CONTACT CALCULATION PROCEDURE.....	3.46
3.10	COMPONENT OF SEPARATION VELOCITY ALONG DIRECTION OF PRINCIPAL FORCE IN VEHICLE COORDINATE SYSTEM.....	3.52
3.11	SCHEMATIC FLOW CHART OF COMMON-VELOCITY CHECK.....	3.53

LIST OF TABLES

Table		Page
1.1	VEHICLE SIZE CATEGORIES BY WHEEL-BASE, AND DEFAULT VALUES FOR REQUIRED PARAMETERS (FOR USE IN ANSWERING QUESTION #2 OF CRASH3)	1.44
1.2	VEHICLE STIFFNESS CATEGORIES	1.56
1.3	COEFFICIENTS OF FRICTION OF VARIOUS ROADWAY SURFACES	1.91
1.4	COMPARISON OF RESULTS USING COMPLETE TO MINIMAL AMOUNTS OF INPUT DATA	1.184
2.1	95 PERCENT CONFIDENCE LIMITS ON FIELD MEASUREMENTS	2.97
2.2	CONTRIBUTION TO DELTA-V SENSITIVITY FROM VARIATION IN FIELD MEASUREMENTS	2.98
2.3	A NUMERICAL EXAMPLE OF THE SENSITIVITY OF ΔV TO THE PDOF	2.100
2.4	PERCENT CHANGE IN ΔV FOR A 10 PERCENT CHANGE IN THE COEFFICIENTS A AND B	2.102
3.1	CRASH3 INPUT/OUTPUT REQUIREMENTS	3.3
C.1	REQUIRED DATA ITEMS FOR OLDMISS APPLICATION	C.5
C.2	DATA COLLECTION FORM PROGRAM OLDMISS	C.6

CHAPTER 1 USER'S GUIDE

1.1 INTRODUCTION

CRASH is an acronym for Calspan Reconstruction of Accident Speeds on the Highway. As its name implies, the CRASH program is a general purpose computer program which can be used to estimate vehicle speeds in real-world accidents based on physical evidence obtained by an accident investigator. The objective of the CRASH program is to provide a standardized and objective means of interpreting the physical evidence from the scene of an automobile collision.

Two separate and independent methods are used to estimate the change in vehicle speeds experienced by the vehicles. The first method, Trajectory Analysis, makes use of the impact and rest positions and other trajectory data and is based on work-energy relationships for the spinout trajectory and the principle of conservation of linear momentum for the collision. The other method, Damage Analyses, makes use of detailed measurements of the structural deformation of each vehicle to arrive at an estimate of the energy required to produce the observed vehicle damage. These two methods can be used to check each other since they should yield similar results if the user possesses sufficient information to fully

utilize both methods. The analytical basis for these methods are shown in Chapter 2, Mathematical Foundations of CRASH3.

In the more than ten years since it was first made available, CRASH has become an integral part of the Federal Government's highway accident research efforts. Although some criticism has appeared in the literature, the CRASH program persists because of the utility of the concept of standardized data collection and interpretation. , Proper data gathering techniques and interpretation of the results are vital for accurate results when using the program.

1.2 APPLICABILITY AND LIMITATIONS

1.2.1 Introduction

The CRASH3 program is a simplified mathematical analysis of automobile accident events. As is the case with any such analytical procedure, certain assumptions have been made to reduce the complexity and the operating cost of the program. A great deal has been written about perceived inadequacies of the crash program and its accuracy in some particular cases. CRASH3 is not, nor was it intended, to be a high fidelity collision simulation program. In most accidents, only a minimum amount of data are available, and even these data are only available second hand. CRASH3 ~~was~~ is intended primarily as a tool for making a standardized assessment of an accident's severity.

Beyond its use by Federal Government sponsored researchers, CRASH3 has become a popular tool among reconstructionists involved in litigation and much of the criticism of the CRASH3 program regards its accuracy. Figure 1.1 shows a plot of the ΔV estimated using CRASH3 versus the actual ΔV of 53 staged collisions reported by Smith and Noga.[13] Statistically, CRASH3 performs

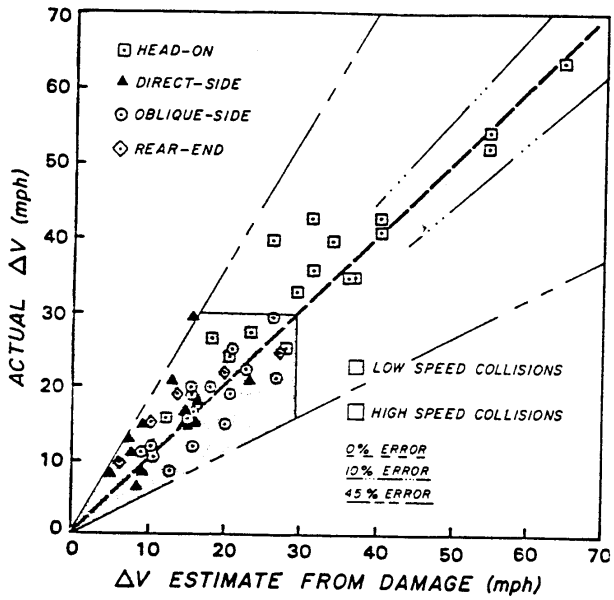

FIGURE 1.1 COMPARISON OF TRUE VERSUS CRASH3 DAMAGE ESTIMATES OF ΔV FOR 53 STAGED COLLISIONS (after Smith and Noga)

well in these cases; a linear regression of the 53 collisions results in the following equation.

$$\Delta V_{true} = -0.7 + 1.1\Delta V_{estimate} \qquad (1.1)$$

On the average, CRASH3 overestimated the change in velocity by about 10 percent as shown by the slope of equation (1.1). If one examines individual cases, however, the error may be as high as 40 percent. Accepting the results of a particular CRASH3 run as absolute truth is plainly unwise. CRASH3 was intended as a statistical tool to identify and isolate problems in motor vehicle safety, not as a simulation program, and should be used accordingly.

Often, accuracy problems are the result of applying the CRASH3 program in situations which violate, to some degree, the fundamental assumptions discussed in this section. Such misapplication will either degrade the accuracy of the solution, or, in the extreme case, may completely invalidate it. Thus, while CRASH3 users need not know the minute details of the analysis procedure, it behooves them to know the major simplifying assumptions so that accident types which violate them may be either avoided, handled with special techniques, or interpreted with proper discretion.

The analytical basis of CRASH3, as presented in Chapter 2, makes use of several important assumptions which limit the use of the program to certain types of accident cases. Cases including vehicles not tracking before impact, active post-impact steering, sideswiping, non-planar terrain, or excessive vehicle yawing or rolling over are not entirely solvable with CRASH3. Each user must make judgments about the applicability of each particular case. Although it is possible and often useful to "trick" the program into solving one of the aforementioned types of cases, it is ultimately the user's responsibility to assure himself that the answers are reasonable. CRASH3 is merely a tool; good engineering judgement must be used to ensure the validity of any results.

1.2.2 Basic CRASH3 Assumptions

The following paragraphs discuss the five major assumptions that are implicit in the CRASH3 program.

° Post-Impact Trajectory

CRASH3 assumes that the vehicles spin out to rest with constant rolling resistances, no active steering, and over a single friction surface, although a secondary friction surface may be

specified in the trajectory simulation. Thus, the trajectory portion of the program cannot handle the case where a driver, after moderate impact, tries to regain control of the vehicle; driver control is assumed to cease at impact. Techniques to handle multiple rolling resistances and friction surfaces will be discussed in Section 1.4.

° Point of Common Velocity During Impact

CRASH3 assumes that at some instant of time during the impact, both vehicles reach a common velocity at an assumed point at the collision interface. There are certain situations, notably sideswipes, when this is not the case and a CRASH3 analysis will not be successful. CRASH3 checks to see if a common velocity is possible; if not, an error message is returned to the user and the run is terminated.

° Flat, Single Friction Surface Traversal

The CRASH3 program is a two-dimensional analysis. Thus, rollovers, curb mountings, and steep inclines are likely to produce large errors in the results of a trajectory analyses. The program assumes that both vehicles travel across the same friction surface. For example, vehicles that traverse over asphalt, then ice, then gravel, violate the single friction surface assumption. A

procedure for calculating an "equivalent" friction coefficient for traversal through several friction zones is given in Section 1.4, and secondary friction surfaces may be specified in the trajectory simulation. Both vehicles, however, must traverse the zones in a similar manner for the procedure to be reasonably precise.

° Quantization of Vehicle Properties

CRASH3 maintains tables of vehicle properties that divide the vehicle population into discrete categories. While the user may improve on some of this tabular data by directly entering the weight of each vehicle, nonetheless, certain vehicle properties such as crush stiffness, vehicle lengths and widths, and rotational inertia are stratified into discreet categories. Naturally, this contributes to some degradation in solution accuracy, but proves more convenient for the average user. The user should always choose the stiffness category very carefully. The vehicle properties in Tables 1.1 and 1.2 are only statistical approximations of the various vehicle classes.

° Uniform Crush Stiffness

CRASH3 assumes uniform individual crush stiffnesses for the side, front, and back of the

vehicle; these three crush zones are defined for 11 vehicle size categories. The crush stiffnesses have been empirically derived from data generated in crash tests at certain speeds. Obviously, the uniformity notion does not account for the fact that a vehicle side is fairly stiff near the axles, but less so near the doors. Again, this is a compromise of complexity, convenience, cost and accuracy.

1.2.3 Nonapplicable Accident Types

The five basic assumptions discussed in the previous section and certain program limitations preclude the use of CRASH3 in the following accident types.

° Rollovers

The CRASH program is not equipped to estimate velocity changes from rollover trajectory or damage. However, if a vehicle strikes another vehicle and then rolls over during the subsequent spinout trajectory, a CRASH damage run could be initiated for the first impact as long as the first impact damage is not disturbed by the rollover.

° Yielding Fixed Objects

Whenever a single vehicle accident with a fixed object occurs, the CRASH user is forced to simulate the off-road collision by defining the second vehicle as an immovable "barrier." This barrier has a weight of one million lb in the CRASH program, requiring a very large force to move it. This massive barrier, which absorbs no energy in the program, has been incorrectly used to simulate guardrails, mailboxes, utility poles, small and large trees, buildings, abutments, ditches; in fact, anything a vehicle might possibly hit has been incorrectly run as a barrier impact.

It may be reasonable to model a very large tree or a concrete abutment with the barrier option, but for most other objects in the off-road environment, this practice is very questionable. For example, if a utility pole did not shear or displace while being struck by a vehicle, the case could be run using the barrier option. If the pole broke or the base was displaced in the ground, however, this option should not be used because the amount of energy absorbed by the pole cannot be estimated. In such a case, energy is dissipated by breaking or moving the barrier. The barrier option for Vehicle 2 should only be used

when the "barrier" did not move or break; such behavior is referred to as unyielding.

° Side-swipes

Sideswiping type accidents are not applicable for two reasons. First, since the majority of the structural components are not engaged, the force developed normal to the vehicle surface is small in comparison with the tangential force and difficult to estimate with the necessary precision. Second, no common velocity is reached between damaged points on the vehicles, thus, violating a basic CRASH assumption.

° Non-Horizontal Forces

During most collisions, the forces that produce the damage are applied nearly parallel to the ground. In situations where they are not, such as those forces resulting from vaulting, ramping or bottoming out, CRASH should not be used, since it cannot account for vertical forces.

° Severe Override/Underride

A measuring protocol has been developed for override/underride accidents. However, when the override/underride is severe, such as that produced by a vehicle contacting an overhanging structure only at hood height, the protocols

cannot compensate. In these cases the crush reported, even after averaging, would not yield an energy representative of that actually involved. Therefore, this type of case should not be run using CRASH.

° Undercarriage Damage

There are no provisions in the CRASH program for analyzing damage to undercarriage components. For example, if a vehicle ran over a low rock and bent a frame crossmember or dented a rim, do not attempt to obtain a ΔV from the CRASH program.

° Collisions with Moving Trains/Large Trucks

Currently, a collision involving structurally stiff and proportionately large objects should not be reconstructed using CRASH. These objects may be simulated using the movable rigid barrier option if other assumptions are reasonable.

° Collisions with Animals/Pedestrians/Cyclists

Collisions involving pedestrians, cyclists, or animals should not be run on CRASH since energy transferred to the pedestrian or animal cannot be estimated.

° Insufficient Data

Hearsay does not constitute acceptable evidence; therefore, when there is insufficient evidence, CRASH3 cannot be used. Damage descriptions from owners, drivers, or collision repairmen are not considered sufficiently accurate. Only actual vehicle and scene damage measurements obtained by a trained investigator are acceptable evidence.

° Multiple Impacts to the Same Area

Often, a vehicle will sustain damage to one area caused by several impacts. For example, after striking another vehicle with its front end, a vehicle may strike a tree with its already damaged front end. Another instance might involve a vehicle striking several parked cars with the same corner. Damage measurements taken based upon final acceptance, when run through CRASH, would produce a higher ΔV than was produced at any one of the individual impacts. CRASH should not be used any time that a crush pattern is altered by another impact.

° More than Two Vehicles

CRASH3 is based on the assumption that only two vehicles interact. In most cases an accident can be separated into several two vehicle collisions.

There are cases, however, where CRASH3 is not applicable. For example, a case where a vehicle is "sandwiched" between two others cannot be analyzed with CRASH3.

1.3 SOLUTION PROCEDURES

1.3.1 Introduction

The purpose of the CRASH3 program is to provide the user with a consistent, rationally derived estimate of the velocity changes, pre-impact speeds, and energy dissipated in motor vehicle impacts. This section provides the user with a general overview of the types of cases which can be solved using CRASH3 and the general solution procedure for several different accident types.

The applicability of the CRASH3 program, and its related programs, POLES and OLDMIS, is restricted by a number of basic assumptions as discussed in Section 1.2. Impacts which are not solvable using CRASH3 are again briefly listed:

- rollovers
- yielding fixed objects such as guardrails and crash cushions
- sideswipes
- non-horizontal forces
- severe overrides/underrides
- undercarriage damage or roof damage

- collisions with pedestrians, animals, cyclists, and other movable items
- insufficient data
- multiple impacts to the same area of the vehicle(s)
- more than two vehicles

1.3.2 Process Flow Diagrams

Using the process flow diagrams shown on the following pages, the user can become acquainted with the different solution procedures used by CRASH3. For example, if the user wishes to analyze a particular accident, Figure 1.2 should first be entered. If more than two vehicles are involved in the accident or if any of the vehicles is not a valid CRASH3 vehicle, CRASH3 cannot be used. If the accident involves only one vehicle, Figure 1.3 should be entered or if two vehicles are involved, Figure 1.4 should be used next. In each of these figures, the user must determine if the Collision Deformation Classification (CDC) is known for each vehicle. If the CDC is not available, no CRASH3 run can be performed. Figures 1.3 and 1.4 then direct the user to the next appropriate figure based on the accident type and the information available.

If, for example, the user wishes to examine a two-vehicle accident, the user should start at Figure 1.2. Assuming that both vehicles are passenger cars, the flow chart instructs the user to go to Figure 1.4. If CDC's are available for both vehicles, this implies, due to the CDC criteria, that the vehicles have been found and some type of inspection has been performed on them. Next, the user must determine if both final rest and impact positions for both vehicles are known. Position information must be such that it can be used in CRASH3 (see Section 1.4 for the correct format). If the positions are known, the user should next go to Figure 1.8. If enough information is obtained on the vehicles during inspection to determine the vehicle size and stiffness categories, CRASH can be run. If during the vehicle inspection vehicle damage dimensions are obtained, they should be entered into the program and the reliability of the results will be greatly enhanced. The example described above would give the best possible results from CRASH since all possible data were obtained.

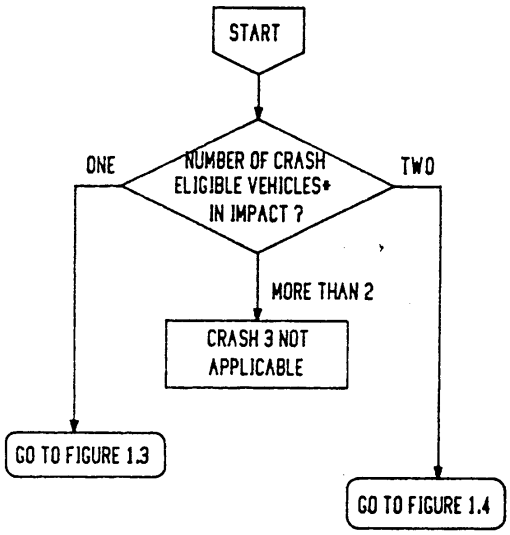

* A description of CRASH eligible vehicles according to collision type is given in Section 1.2.3 of this manual.

FIGURE 1.2 ELIGIBLE CRASH3 VEHICLES

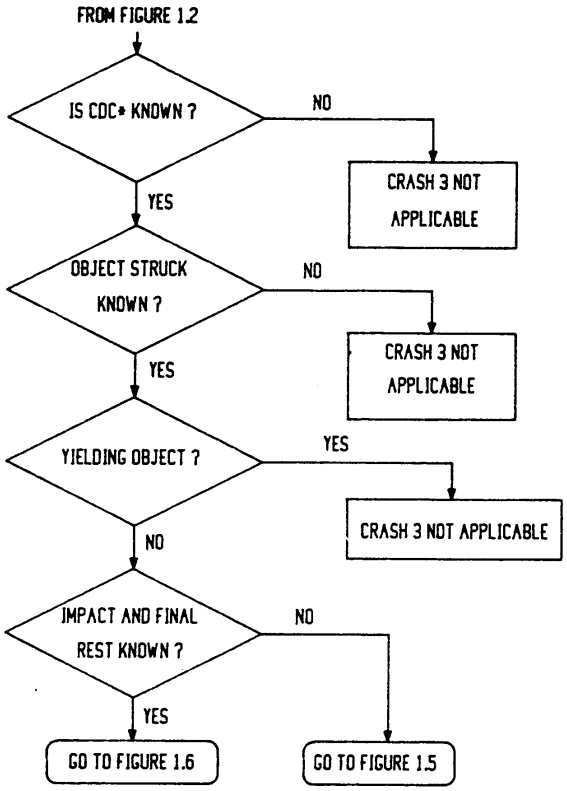

* Collision Deformation Classification.

FIGURE 1.3 SINGLE VEHICLE USE OF CRASH

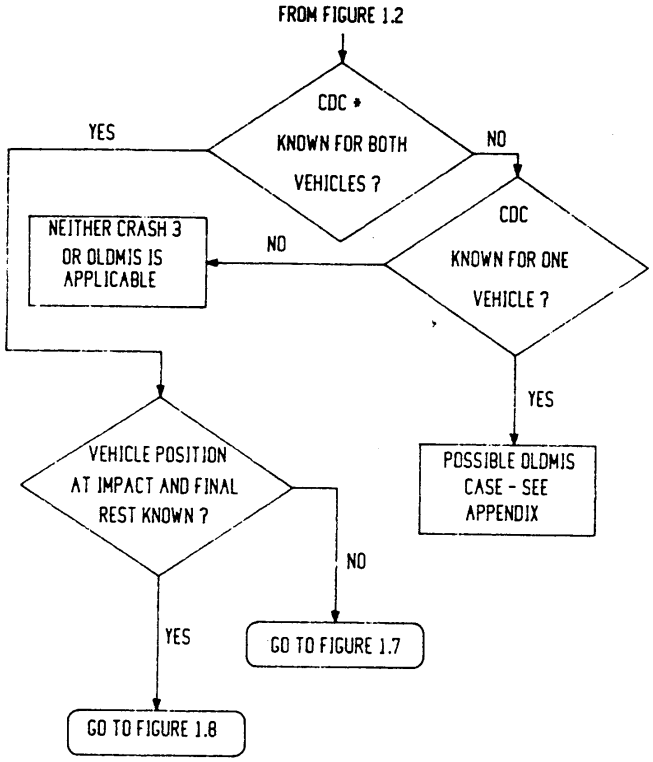

* Collision Deformation Classification.

FIGURE 1.4 TWO VEHICLE USE OF CRASH

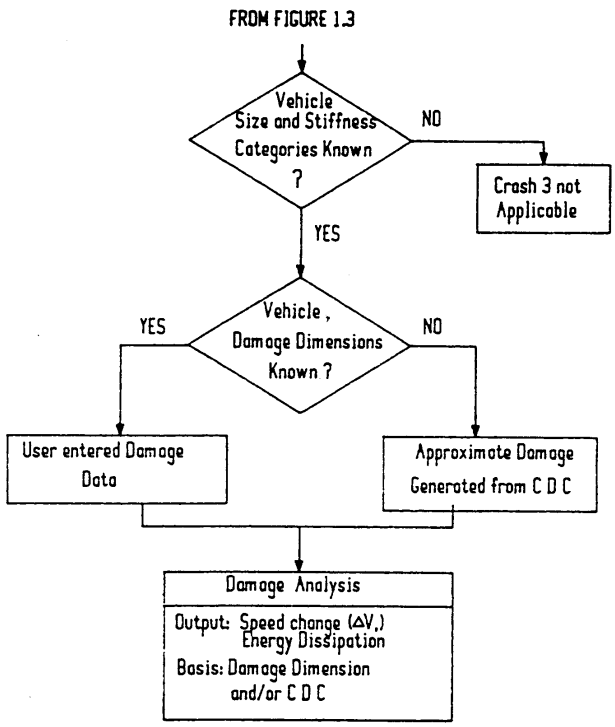

FIGURE 1.5 SINGLE VEHICLE DAMAGE ONLY CRASH RUN

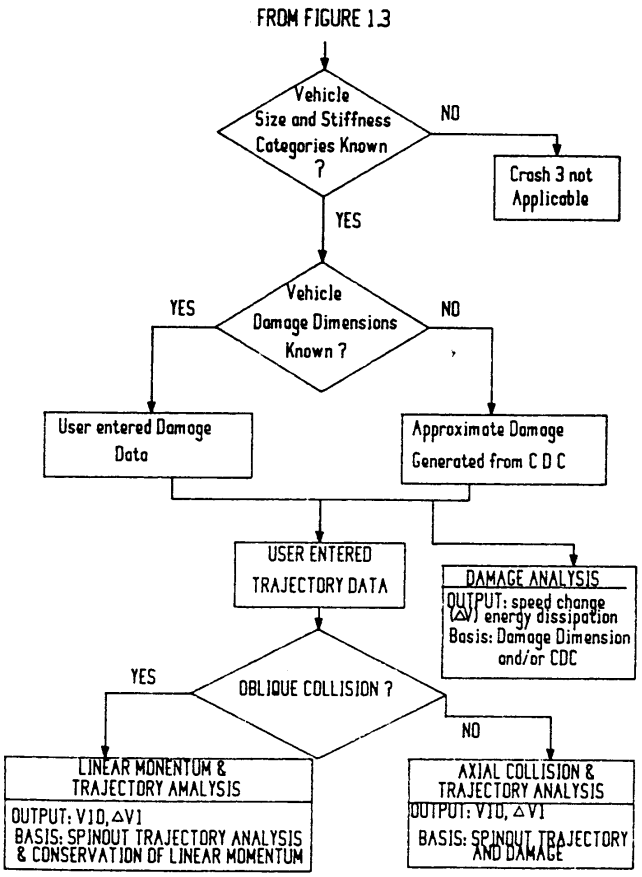

FIGURE 1.6 SINGLE VEHICLE TRAJECTORY CRASH RUN

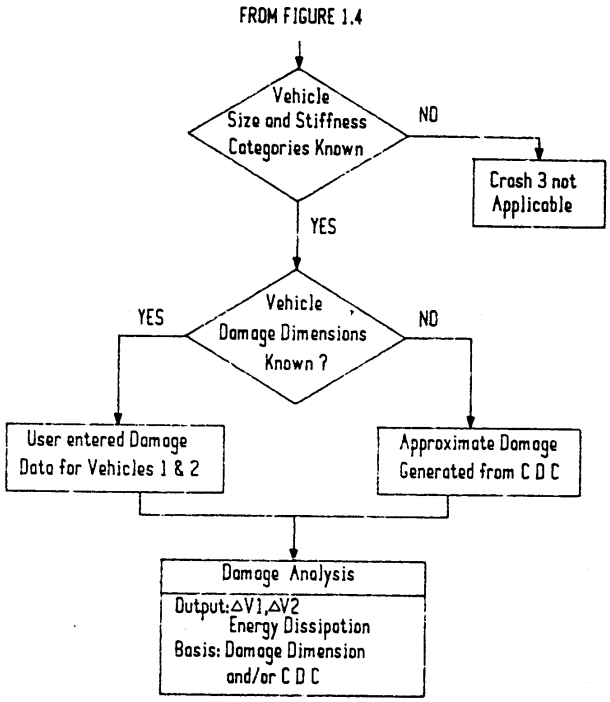

FIGURE 1.7 TWO VEHICLE DAMAGE ONLY CRASH RUN

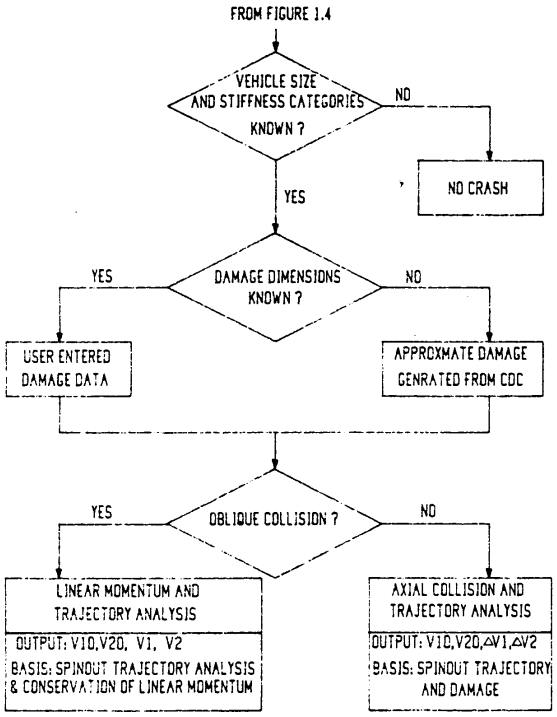

FIGURE 1.8 TWO VEHICLE TRAJECTORY CRASH RUN

1.3.3 Example Solution Procedures

The following paragraphs contain several examples of accident cases; some can and some cannot be solved using CRASH3. These examples should help illustrate the types of cases which can be run and what types of analyses CRASH3 can perform.

EXAMPLE 1

BACKGROUND: A passenger car hits a tree. The vehicle is not available for complete inspection, although the CDC and vehicle make and model are known from another source. Rest and impact positions are not known.

SOLUTION: Run CRASH3 using approximate damage generated from CDC by the CRASH program. Results will be subject to more error than discussed in Section 1.2.1 due to the minimal amount of information provided to the program by the omission of damage measurements. Follow the solution from Figure 1.2 to Figure 1.3 to Figure 1.5.

EXAMPLE 2

BACKGROUND: A pickup truck strikes a wooden fence, penetrates the fence, and subsequently rolls over in a yard. All the damage information on the vehicle as well as impact and final rest positions are obtained.

SOLUTION: None. Neither of the impacts in this accident is eligible for CRASH3. The fence is not eligible since it is a yielding object, and the rollover impact is not since CRASH is a two-dimensional program and rollovers are three-dimensional events.

EXAMPLE 3

BACKGROUND: A new mini-van strikes a passenger car in the left side after the car runs a stop sign. The vehicles are both completely inspected; all data necessary for CRASH is obtained. Skid marks at the scene locate both vehicles at impact and the mini-van at final rest.

SOLUTION: A CRASH run based on vehicle damage data is the only solution available with certainty. The damage data solution follows from Figure 1.2 to Figure 1.4 to Figure 1.7.

EXAMPLE 4

BACKGROUND: A passenger car strikes a pedestrian, goes out of control and hits a large tree. The car is inspected and a CDC is assigned and a complete crush profile is obtained for both impacts. The two impact points and the final rest positions are known.

SOLUTION: Run CRASH on the tree impact using the trajectory data and damage data. CRASH3 cannot be used on the pedestrian impact since it violates a basic CRASH3 assumption; namely, a pedestrian is not an eligible vehicle. The logic for the tree impact can be followed on Figures 1.2, 1.3, and 1.6.

EXAMPLE 5

BACKGROUND: A pickup truck is struck by a station wagon. Both vehicles spin to rest without hitting anything else. Both vehicles are fully inspected and all size and stiffness data are available. Impact positions can be obtained and the final rest positions are known.

SOLUTION: A CRASH run based on trajectory data and vehicle damage is possible. The logic can be followed in Figures 1.2, 1.4, and 1.8.

1.3.4 CRASH Program Summary Form

The CRASH Program Summary Form has evolved over a period of years as a helpful tool for users of the CRASH program. The form provides an easy to use collection point for data obtained from an accident case which the user desires to analyze using CRASH3.

To use the form, obtain the pertinent data from all the available sources as discussed in each of the questions in the next section. If the user is uncertain, he should consult the portion of this manual dealing with the problematic question. Question numbers are identical in the program execution, in this manual, and on the summary form to facilitate quick and easy cross referencing. As much of the form should be filled out as is possible with care being taken to provide the correct units and follow the appropriate sign conventions. Figure 1.9 shows a blank, slightly modified version of the standard form used in the National Accident Sampling System (NASS).

While completing the CRASH Program Summary Form, special care should be taken to ensure that all data inputs are accurately transcribed and consistent with one another. The user should satisfy

CRASH Program Summary

This form presents the CRASH Program summary information for traffic units numbered

	Vehicle No	Make	Model
First Vehicle	____	____	____
Second Vehicle	____	____	____

TITLE: (50 Characters Maximum)

_____

_____

_____

2. VEHICLE CLASS WEIGHT*
   Veh # 1 Class Occupant Cargo Curb _
   Weight ___ ___ ___ ___ ___ ___
   Veh # 2 Class _
   Weight ___ ___ ___ ___ ___ ___
3. Veh # 1 CDC ___ ___ ___ ___ ___
   PDOF ___ ___
4. Veh # 2 CDC ___ ___ ___ ___ ___
   PDOF ___ ___
5. VEHICLE STIFFNESS*
   Veh # 1 _
   Veh # 2 _
6. KNOWLEDGE of REST and IMPACT POSITIONS*
   ___ No – skip to 38 – Damage Dimensions
   ___ Yes
7. REST
   Veh # 1 X ___ ___ ___
   Y ___ ___ ___
   ψ ___ ___ ___
   Veh # 2 X ___ ___ ___
   Y ___ ___ ___
   ψ ___ ___ ___
8. IMPACT
   Veh # 1 X ___ ___ ___
   Y ___ ___ ___
   ψ ___ ___ ___
   Veh # 2 X ___ ___ ___
   Y ___ ___ ___
   ψ ___ ___ ___
9. Slip angles PRIOR to impact*
   ___ No – skip to 11.
   ___ Yes
10. Slip angles
    Veh # 1 ___ ___
    Veh # 2 ___ ___
11. SUSTAINED CONTACT*
    ___ No
    ___ Yes
12. SKIDDING of Vehicle One*
    ___ No – skip to 15.
    ___ Yes
13. Did SKIDDING stop prior to final rest*
    ___ No – skip to 15.
    ___ Yes
14. Location
    X ___ ___ ___
    Y ___ ___ ___
    ψ ___ ___ ___
15. Was Vehicle One's PATH CURVED*
    ___ No – skip to 17.
    ___ Yes
16. Point on Path
    X ___ ___ ___
    Y ___ ___ ___
17. ROTATION DIRECTION of Vehicle One*
    ___ None – skip to 19
    ___ Clockwise
    ___ Counterclockwise
18. More than 360 degrees*
    ___ No
    ___ Yes
19. SKIDDING OF Vehicle Two*
    ___ No – skip to 22.
    ___ Yes
20. Did SKIDDING stop prior to final rest*
    ___ No – skip to 22.
    ___ Yes
21. Location
    X ___ ___ ___
    Y ___ ___ ___
    ψ ___ ___ ___
22. Was Vehicle Two's PATH CURVED*
    ___ No – skip to 24.
    ___ Yes
23. Point on Path
    X ___ ___ ___
    Y ___ ___ ___
24. ROTATION DIRECTION of Vehicle Two*
    ___ None – skip to 26.
    ___ Clockwise
    ___ Counterclockwise
25. More than 360 degrees
    ___ No
    ___ Yes
26. Tire-Ground FRICTION* ___ ___ ___

FIGURE 1.9 CRASH PROGRAM SUMMARY FORM

27. ROLLING RESISTANCE* (Option (1) or (2))

(1) Proportion of Braking Each Wheel

28. ROLLING RESISTANCES for Individual Wheels — Veh # 1 RF ___ LF ___ RR ___ LR ___

29. ROLLING RESISTANCES for Individual Wheels — Veh # 2 RF ___ LF ___ RR ___ LR ___

OR

(2) Longitudinal Deceleration

30. Veh # 1 ___

31. Veh # 2 ___

32. TRAJECTORY SIMULATION*

___ No – skip to 38.
___ Yes Steer angles*

33. STEER ANGLES — Veh # 1 RF ___ LF ___ RR ___ LR ___

34. STEER ANGLES — Veh # 2 RF ___ LF ___ RR ___ LR ___

35. TERRAIN BOUNDARY*

___ No – skip to 38.
___ Yes Boundary Points*

36. BOUNDARY POINTS — XBP1 ___ YBP1 ___ XBP2 ___ YBP2 ___

37. SECONDARY FRICTION COEFFICIENT* ___

38. ARE DAMAGE DIMENSIONS known?

___ No PROGRAM COMPLETED*
___ Yes Dimensions in inches

39. Side damage
42. End damage — Veh # 1 L ___

40. Side damage
43. End damage — C_1 ___ C_2 ___ C_3 ___ C_4 ___ C_5 ___ C_6 ___

41. Side damage
44. End damage — Dz ___

45. Side damage
48. End damage — Veh # 2 L ___

46. Side damage
49. End damage — C_1 ___ C_2 ___ C_3 ___ C_4 ___ C_5 ___ C_6 ___

47. Side damage
50. End damage — Dz ___

FIGURE 1.9 CRASH PROGRAM SUMMARY FORM (Continued)

himself that all the data "make sense" in terms of vehicle damage and trajectories before actually using the program; the summary form is an excellent place to store and review the data required by the CRASH program.

Occasionally, multiple impact accidents will be encountered by the user. For example, Vehicle 1 may strike Vehicle 2 and then veer off and strike Vehicle 3. A single CRASH run cannot reconstruct a multiple impact collision. Each impact of a multiple impact event should be examined as a separate CRASH run. Separate Program Summary Forms for each impact must be filled out and each impact treated as a separate collision.

1.4 MENU RESPONSES

1.4.1 Introduction

CRASH3 obtains information from the user by asking a series of questions. These questions may be grouped in three general categories. Section 3.3 discusses installing the CRASH program on the microcomputer. Once the program has been installed, it can be run by typing the keyword "CRASH3" followed by the <ENTER> key.

Questions 1-5, The Preliminary Questions, ask the user for a title and basic data for each vehicle. These questions are an essential part of every CRASH3 run and cannot be skipped.

Questions 6-31, The Trajectory Description Questions, are designed to gather evidence related to the spinout trajectory of each vehicle in the collision. If rest and impact positions are known for each vehicle, and other conditions such as skidding and rotation can be identified, approximations of the separation conditions will be produced by the CRASH3 spinout model. If the user indicates that trajectory information is not available by a "no" response to Question 5,

Questions 6-31 will be skipped and only damage related input will be solicited.

Question 32, The First Trajectory Simulation Question, offers the option of invoking a time history simulation of the spinout trajectory of each vehicle. The simulation results can be used to confirm or improve the accuracy of the calculated separation conditions. Questions 33-37 provide the detailed input for the trajectory simulations.

The last group of questions, 38-50, are The Vehicle Damage Questions. CRASH3 selects the appropriate group of questions for each vehicle based on information supplied by the CDC entered in response to Question 3 or 4. If the user specifies that damage measurements are not available by a "no" response to Question 38, the remaining damage questions are skipped.

Definitions and discussions of the individual questions are presented in the following sections. Those questions which are numbered in the program will be identified by the same question number in this manual; those questions without numbers will be identified by an asterisk. The "Long Form" of each question is

from the "Complete" run while the "Short Form" is from the "Abbreviated" type of run. There are some slight differences between the mainframe versions and the microcomputer versions of the questions. These differences are discussed in Section 1.6.

1.4.2 Preliminary Questions

A CRASH3 run begins with several questions which must be answered. The first question determines the type of CRASH3 run desired. The first five numbered questions query the user for critical information about vehicle size, weight, and stiffness categories. The user should carefully consider the vehicle size and stiffness categories since they will greatly affect the final answers produced by the program.

QUESTION *: Options

```
* ENTER TYPE OF CRASH RUN?
  (COMPLETE, ABBREVIATED, RERUN, PRINT, SMAC,
  OR END)

  SELECT DESIRED TYPE OF RUN.  FIRST LETTER IS
  SUFFICIENT, I.E., "C" FOR COMPLETE
```

COMPLETE - LONG FORM QUESTIONS AND FULL PRINTOUT

ABBREVIATED - SHORT QUESTIONS AND SHORT SUMMARY PRINTOUT

RERUN - EXECUTE THE CRASH PROGRAM WITH UP TO TWELVE RESPONSES ALTERED BY THE USER. ALL OTHER DATA REMAINS THE SAME AS THE PREVIOUS RUN. QUESTIONS AND PRINTOUT WILL BE ABBREVIATED.

PRINT - COMPLETE PRINTOUT OF PREVIOUS CRASH RUN.

SMAC - PUNCH AN INPUT DECK FOR THE SMAC PROGRAM BASED ON THE PREVIOUS RUN

END - TERMINATE THE CRASH PROGRAM

If "C" (complete) is selected, the following notice will be printed.

```
*****************************************************************************
*                                                                           *
*                                  CRASH                                    *
*                                                                           *
*          CALSPAN RECONSTRUCTION OF ACCIDENT SPEEDS ON THE HIGHWAY         *
*                                                                           *
*  NOTE:     ANSWER ALL QUESTIONS AS DIRECTED.                              *
*            TERMINATE ALL RESPONSES WITH A CARRIAGE RETURN.                *
*            RESPONSES MAY BE PLACED ANYWHERE ON A LINE.                    *
*            SEPARATE RESPONSES BY ONE OR MORE BLANKS.                      *
*            ENTER A ? TO GET THE COMPLETE VERSION OF A QUESTION.           *
*            ENTER A $ TO BACKSPACE TO THE PREVIOUS QUESTION.               *
*            ENTER A BLANK LINE TO GET THE PREDEFINED DEFAULT VALUE.        *
*            IF YOU MAKE A MISTAKE:  (1) BEFORE HITTING CARRIAGE RETURN,    *
*            TYPE SOME GARBAGE THAT YOU KNOW THE COMPUTER WILL REJECT -     *
*            THE COMPUTER WILL COMPLAIN AND RESUBMIT THE QUESTION.          *
*            (2) AFTER HITTING CARRIAGE RETURN YOU'LL HAVE TO USE THE       *
*            BACKSPACE COMMAND ON THE NEXT QUESTION.                        *
*                                                                           *
*            COORDINATE SYSTEM CONVENTIONS:  + Y-AXIS RUNS TO THE RIGHT     *
*            OF THE + X-AXIS.  POSITIVE HEADING ANGLES ROTATE CLOCKWISE.    *
*                                                                           *
*****************************************************************************

? ENTER RETURN TO CONTINUE:
```

As indicated by the question text, there are six types of crash runs. Input to the program should be in capital letters. If lower case letters are used, an error message will be printed and the user will be queried again for input. They are:

- COMPLETE
  The full self-explanatory text of each question is displayed on the screen. This option is essential for novice users and tedious for more experienced users. All previous data are cleared if the complete option is selected.

- ABBREVIATED
  An abbreviated form of the questions is displayed for users who are familiar with the system and do not require full prompting. The analysis and results using the COMPLETE or ABBREVIATED options are identical. The full text for any question can be obtained by entering a "?" at the question prompt.

- RERUN
  The RERUN option is useful for situations where the user desires to change his response to only one or two questions. This option allows the user to selectively change up to twelve responses. If the RERUN option is selected,

the user will be presented with the following prompt:

```
ENTER SOURCE OF INPUT FOR CRASH3 RERUN
  1.  INTERACTIVE (FROM KEYBOARD)
  2.  DISK FILE
  ENTER NUMBER:
```

If the user has just completed an abbreviated or complete CRASH3 run, he should enter a "1". If the user wishes to use a run which was earlier saved on the disk, a "2" should be entered. The following prompt will appear if "2" is selected:

```
ENTER INPUT FILE NAME (CRASH)----
```

If the <ENTER> key is struck, the system looks for a file named CRASH.GRF. If a file name is entered, the system will search for the specified file. See the "SAVE INPUT" question for file naming conventions. In either case, the program next queries the user for the question numbers he wishes to change:

```
QUESTION NUMBERS?
```

The user may enter up to twelve questions for which he may wish to alter the responses.

° PRINT

The PRINT option can be used to send the results of an abbreviated, complete, or rerun CRASH3 session to either a printer or a file. When this option is selected, the following prompt appears:

```
ENTER DESTINATION FOR PRINT OUTPUT:
    1.  PRINTER
    2.  DISK FILE
    ENTER NUMBER:
```

If a "1" is entered, the output will automatically be routed to the printer. If the printer is not connected properly, an error message will be printed. If a "2" is entered, the user is asked for a file name to store the output in:

```
ENTER FILE NAME TO SAVE PRINT FILE - (CRASH):
```

The default name of CRASH will be used if no name is specified. the file will automatically be given a ".PRT" extension.

° SMAC

This option generates an input file for the SMAC program based on the previous CRASH3 run.

- END

  This option causes the program to stop and return to the computer operating system.

QUESTION 1: Title

Long Form: 1. ENTER A DESCRIPTIVE TITLE?
(80 CHAR. MAX.)

Short Form: 1. TITLE?

Users should include the date of the CRASH3 run so that the program version can be identified in the event of future revisions. The backspace entry is not accepted on this question. The default title is simply the letters "CRASH."

QUESTION 2: Vehicle Size Classifications and Weights

Long Form: 2. ENTER CLASSIFICATIONS AND WEIGHTS FOR BOTH VEHICLES. SUGGESTED CLASSIFICATIONS ARE:

```
 1 -  00.0 TO  94.8 INCH WHEELBASE
 2 -  94.8 TO 101.6 INCH WHEELBASE
 3 - 101.6 TO 110.4 INCH WHEELBASE
 4 - 110.4 TO 117.5 INCH WHEELBASE
 5 - 117.5 TO 123.2 INCH WHEELBASE
 6 - 123.2 TO 150.0 INCH WHEELBASE
 7 - VAN - 109 to 130 INCH WHEELBASE
 8 - NOT USED
 9 - NOT USED
10 - MOVABLE BARRIER
11 - IMMOVABLE BARRIER
LEGAL WEIGHTS ARE 1000 TO 50000 LBS.
FORMAT:   CLASS(V1)  WEIGHT(V1)
          CLASS(V2)  WEIGHT(V2)
EXAMPLE:  2  1850.  4  3750.
```

Short Form: 2. CLASS/WEIGHTS?

Vehicles should be classified by the appropriate wheelbase category. The categories serve to define approximate overall vehicle dimensions, radii of gyration, and default weights through a table lookup within the Subroutine DAMAGE. Vehicle parameters for each category are listed in Table 1.1 to aid in the classification procedure.

The entry of vehicle weights is optional, though highly recommended. If less than four entries are made in response to Question 2, the CRASH3 program

TABLE 1.1

VEHICLE SIZE CATEGORIES BY WHEELBASE, AND DEFAULT VALUES FOR REQUIRED PARAMETERS (FOR USE IN ANSWERING QUESTION 2 OF CRASH3)

CATEGORY NO. / DEFAULT PARAMETER	1	2	3	4	5
	Mini-car	Subcompact	Compact	Inter-mediate	Full Size
WHEELBASE (IN)	80.9-94.8	94.8-101.6	101.6-110.4	110.4-117.5	117.5-123.2
TRACK (IN)	51.1	54.6	58.9	61.8	63.7
LENGTH (IN)	159.8	174.9	196.2	212.8	223.7
WIDTH (IN)	60.8	67.2	72.6	77.0	79.8
a (IN)	45.1	46.3	51.3	54.7	58.1
b (IN)	48.1	50.1	55.5	59.2	63.0
X_F (IN)	76.0	83.3	89.8	98.8	101.8
X_R (IN)	-83.8	-91.6	-106.4	-114.0	-121.9
Y_S (IN)	30.4	33.6	36.3	38.5	39.9
RSQ (IN^2)	2006.	2951.	3324.	3741.	4040.
M ($LB\text{-}SEC^2/IN$)	5.70	7.90	9.18	10.99	12.59
CURB WT (LBS)	1902.	2753.	3247.	3947.	4565.

DEFINITIONS:
- a = distance from c.g. to front axle
- b = distance from c.g. to rear axle
- X_F = distance from c.g. to front of vehicle
- X_R = distance from c.g. to rear of vehicle
- Y_S = distance from c.g. to side of vehicle
- RSQ = radius of gyration, squared
- M = vehicle mass (includes 2 passenger loading)

TABLE 1.1 (Continued)

VEHICLE SIZE CATEGORIES BY WHEELBASE, AND
DEFAULT VALUES FOR REQUIRED PARAMETERS
(FOR USE IN ANSWERING QUESTION 2 OF CRASH3)

CATEGORY NO. / DEFAULT PARAMETER	6	7	8	9	10	11
	Luxury	Vans	Pick-ups	Jeeps	Movable Barrier	Immovable Barrier
WHEELBASE (IN)	123.2-150	109"-130"			120.0	--
TRACK (IN)	63.7	67.6"			60.0	--
LENGTH (IN)	229.4	183.6"	NO DATA ARE		180.0	--
WIDTH (IN)	79.8	79."	AVAILABLE FOR		78.0	--
a (IN)	60.1	48.5	CATEGORIES 8 AND 9. DO NOT		54.0	50.
b (IN)	65.1	68.5	USE THESE		66.0	50.
X_F (IN)	104.2	75.6	CATEGORIES.		84.0	50.
X_R (IN)	-125.2	-107."			-96.0	-50.
Y_S (IN)	39.9	39.5"			50.0	50.
RSQ (IN^2)	4229.	3713.			4024.	10^6
M ($LB\text{-}SEC^2/IN$)	13.74	11.2			10.35	10^6
CURB WT (LBS)	5009.	4300.			4000.	

DEFINITIONS: a = distance from c.g. to front axle

b = distance from c.g. to rear axle

X_F = distance from c.g. to front of vehicle

X_R = distance from c.g. to rear of vehicle

Y_S = distance from c.g. to side of vehicle

RSQ = radius of gyration, squared

M = vehicle mass (includes 2 passenger loading)

will distinguish the classification and weight entries by the magnitudes of the entered numbers.

The omission of a vehicle weight entry will result in the use of the curb weight value from Table 1.1 for the specified vehicle classification. Since the accuracy of program results is obviously degraded by the use of such "representative" values, the user should obtain accurate weights whenever possible. In determining vehicle weights, the weight of occupants and cargo should be added to the "curb" weight. Note that the "curb" weight includes coolant, fuel, and oil. The "shipping" or "dry" weight does not include these liquids. The default values for vehicle weights that are stored in CRASH3 include allowances for liquid weight and two occupants.

In responding to Question 2, the user must supply the vehicle classification in the order: Vehicle 1, Vehicle 2. The weight for each vehicle is entered immediately after the classification; the user may omit either or both the weight entries. There is no default vehicle classification; therefore, this question must be answered.

QUESTIONS 3 AND 4: Collision Deformation Classification and Direction of Principal Force

Long Form: 3. ENTER THE VEHICLE DAMAGE INDEX AND THE DIRECTION OF PRINCIPAL FORCE VEHICLE #1.
NOTE: THE CDC IS A 7 CHARACTER CODE, SEE APPENDIX 2 IN THE CRASH3 USER'S GUIDE FOR DETAILS.
THE PDOF ENTRY ALLOWS THE USER TO SPECIFY THE DIRECTION OF PRINCIPAL IMPACT FORCE MORE ACCURATELY THAN THE CDC CLOCK DIRECTIONS ALLOWS. THE PDOF ENTRY IS OPTIONAL.
FORMAT: CDC (7 CHARACTER CODE) PDOF (+ OR -180 DEGREES MAX.)
EXAMPLE: 12RFEW3 17.

4. ENTER THE VEHICLE DAMAGE INDEX AND THE DIRECTION OF PRINCIPAL FORCE VEHICLE #2.
NOTE: THE CDC IS A 7 CHARACTER CODE, SEE APPENDIX 2 IN THE CRASH3 USER'S GUIDE FOR DETAILS.
THE PDOF ENTRY ALLOWS THE USER TO SPECIFY THE DIRECTION OF PRINCIPAL IMPACT FORCE MORE ACCURATELY THAN THE CDC CLOCK DIRECTIONS ALLOWS. THE PDOF ENTRY IS OPTIONAL.
FORMAT: CDC (7 CHARACTER CODE) PDOF (+ OR -180 DEGREES MAX.)
EXAMPLE: 12RFEW3 20.

Short Form: 3. CDC/PDOF #1?

4. CDC/PDOF #2?

Questions 3 and 4 are perhaps the two most important questions asked during a CRASH3 run. The Collision Deformation Classification (CDC) is used to determine what type of collision occurred in the accident; different solution methods and default vehicle properties are used based on what is entered for a CDC. For example, the CDC contains information which indicates, whether the collision is a frontal, a side impact, a rear end collision, or a rollover, and whether the damage is uniform or oblique.

The Collision Deformation Classification (CDC) is a seven-digit code which is completely described in SAE Technical Report No. J224MAR80.[14] It is far beyond the scope of this manual to fully describe the CDC beyond referring the reader to the source document which is reproduced in Appendix B. There are several specific situations where the CRASH3 program will not accept a valid CDC. Most of these situations arise for impact types which should not be analyzed using CRASH because they violate at least one of the simplifying assumptions listed in Section 1.2.2.

- Question 3 will not accept a "00" in the first two columns because this code denotes a roll-over: thus violating a fundamental CRASH3 assumption.

- Since the CRASH3 program assumes that damage is distributed uniformly in the vertical direction, column 5 of the CDC is not used in the program. Column 5 specifies the vertical location of the damage on the vehicle. For example, damage below the beltline is coded as "E". Undercarriage damage is coded as "L". CRASH3 effectively assumes the entire vertical area is uniformly crushed and the code listed in column 5 is superfluous to CRASH3. Another feature of CRASH3's use of the CDC is that only the columns are checked for valid entries. The whole code may be invalid although all the columns contain valid characters. For example, CRASH3 will accept the CDC 09LBEL3 because it is composed of legal CDC characters. The "L" in column 6, however, is not a valid column 6 entry. Entries in column 6 must be one of the following characters: W N S O A E K U. Given the above considerations, the user should always check his CDC values for correctness and validity since the program will accept incorrect values.

Since there is no assigned default CDC, the user must enter a valid CDC for both vehicles. The syntax checking subroutine (VDISCN) verifies that each of the seven digits of the user-entered CDC is a legal character, not including the fifth character, since it is not used by the CRASH3 program.

The clock directions in the CDC's are rounded off to the nearest 15 degrees. In cases where a more accurate definition of the principal direction of force (PDOF) is available, the user should enter this by encoding the PDOF immediately after the associated CDC. These entries are optional but very strongly recommended; the default value is the PDOF specified by the clock direction. If the entered forces are more than 15° away from 180° opposition, the erroneous condition will be intercepted by the CRASH3 program when the user answers the impact position question, Question 7. The program will issue a diagnostic warning and return to the CDC Question 3.

The PDOF is a very important, though difficult to obtain parameter. The user should experiment with variations of the PDOF to observe the effect on the final answers. The user should continue experimenting with different PDOF values until he obtains results which seem the most reasonable in terms of the scene and vehicle evidence. The final results are very sensitive to the PDOF and its importance cannot be overstated.

The PDOF is, by nature, very subjective. The following suggestions may help the user in determining a first trial PDOF.

- The direction of sheet metal crush, frame shift, and scratches can give clues about the PDOF.

- The trajectories before and after impact are good indicators of the PDOF.

- Occupant motion is another useful tool for assessing the PDOF. Often occupant contact points in the interior provide a good record of the occupant's trajectory inside the passenger compartment. Usually the occupant's motion is in the direction of the PDOF although there are many complicating factors which may confuse this evidence. In a full frontal collision, the driver moves forward, perhaps striking the steering wheel; the PDOF is in the direction of the occupant's travel.

Figure 1.10 is composed of a sketch of two vehicles with colinear forces and a diagram illustrating the PDOF on a clock diagram. The PDOF is measured from the vehicle's front (0 degrees) to back (180 degrees) in a clockwise direction. The PDOF must be between ±180° as shown in Figure 1.10.

The forces on both vehicles <u>must</u> be colinear. For example, in Figure 1.10, Vehicle 1 has a PDOF of about -30°, whereas, Vehicle 2 has a PDOF of +60°; the forces are along the same line: they are colinear. Sketching the vehicles with the proper orientations is essential to correctly defining the PDOF. If the example shown in Figure 1.10

(a) Colinear Force Vectors

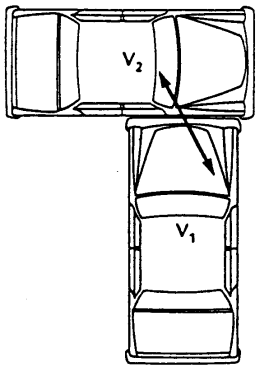

(b) Sign Conventions for PDOF

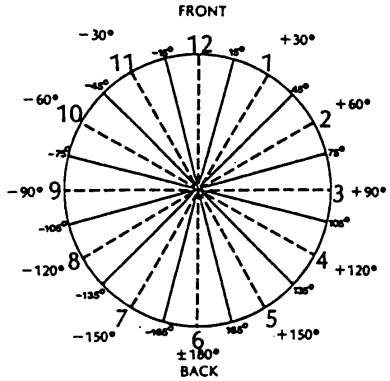

FIGURE 1.10 PRINCIPAL DIRECTION OF FORCE

produced unreasonable final results using CRASH3, the user may then change the PDOF values to -20° for Vehicle 1 and +70° for Vehicle 2; the PDOF for both vehicles must always be colinear.

QUESTION 5: Vehicle Stiffness Categories

Long Form: 5. ENTER THE STIFFNESS CATEGORIES FOR VEHICLE 1 AND VEHICLE 2.
NOTE: THE STIFFNESS CATEGORY IS AN INTEGER CODE (FROM 1 TO 11) FOR THE CRUSH RESISTANCE OF EACH VEHICLE. THE APPROPRIATE VALUE SHOULD BE SELECTED FROM TABLE 1.2 IN SECTION 1.4.2 OF THE CRASH3 USER'S GUIDE. USE 10, 11 AS VALUES FOR MOVING, FIXED BARRIERS.

Short Form: 5. VEHICLE 1 AND VEHICLE 2 STIFFNESS CATEGORIES?
FORMAT: V1 V2
EXAMPLE: 2 3

The selection of a vehicle stiffness category will determine which set of stiffness coefficients will be used by the CRASH3 program to approximate the resistance of each vehicle to the crushing forces which occur in a collision. The categories are entered into the program utilizing the integer codes found in Table 1.2. <u>The stiffness category question must be answered; there are no default values</u>.

The coefficients assigned to each stiffness category are derived from data obtained from a series of staged collisions and laboratory

tests. Obviously, Table 1.2 is not an exhaustive list of vehicles. A few examples of the type and size of vehicles which are in each category are given in the table to provide the user with a basis for categorizing other vehicles. If a vehicle does not appear on the list, the user should attempt to identify a similar vehicle which is listed and use that category. As an example, assume that a Chevrolet Camaro is a case vehicle. This vehicle is not on the list; however, the Pontiac Firebird is listed in category 3. A Camaro and a Firebird are essentially the same vehicle with only cosmetic differences; the basic vehicle structure is similar. Both vehicles are therefore in the same stiffness category.

If a vehicle cannot be matched to a similar vehicle in the table, the user should use the same stiffness category as the size category (see Question 2, Table 1.1) based on the vehicle's wheelbase.

The above does not apply when the vehicle involved is a van, pickup, or front-wheel drive passenger car which was struck in the front or rear. Vans and some four-wheel drive vehicles should be classified as category 7 for front and rear impacts, but if struck in the side, a category

TABLE 1.2

VEHICLE STIFFNESS CATEGORIES

NOTE: Stiffness Category # is required for CRASH3 Question 5.

STIFFNESS[1] CATEGORY		1	2	3	4	5
		Mini-cars	Subcompact	Compact	Inter-mediate	Full Size
2. VEHICLE MODELS		Pinto (FRONT) Accord Honda CVCC Prelude Corolla Chevette Fiesta Bobcat Datsun 210 Datsun 310 Arrow Champ Colt Porsche 924 Mazda GLC Fiat 124 Spider Fiat X1/9 Datsun 280ZX Opel MG Midget Tri. Spitfire VW Rabbit VW Scirocco	Pinto (REAR) Chev. Monza Celica ST Celica GT Corona Spirit Pacer Gremlin VW Dasher Vega Skyhawk Omni Sunbird Starfire Mustang (78-) Horizon Fiat 128 Sedan Capri 280 ZX 2+2 Challenger BMW 320i Audi fox Mazda Cosmo Mazda RX-7 Renault LeCar Saab 900 Saab 99 Subaru	Celica Supra Mustang (-73) AMC Concord Malibu (78-) Monarch Zepoyr Fairmont Granada Firebird Cressida Datsun 810 Monte Carlo (78-) Grand Prix (78-) Cutlass (78-) Regal Aspen Peugot 604L BMW 528i Volvo (all) Audi 5000 LeMans (78-) Volare	Cheveile (-77) MonteCarlo (-77) Grand Prix (-77) Cutlass (-77) LeMans (-77) Phoenix Chev V-8 (-77) LeSabre (77-) Monaco (77-) Magnum Century LeBaron Riviera (77-) Marquis (77-) LTD (77-) Cordoba Nova Eldorado (79-) Delta 88 (77-) Diplomat T-Bird (77-) Seville Ventura Cougar	Chev V-8 (-76) LeSabre (-76) Chev V-8 (-76) Monaco (-76) Marquis (-76) LTD (-76) Delta 88 (-76) T-Bird (-76) St. Regis Newport
(F) FRONT	A	302 lb/in$_2$	259	317	356	325
	B	47 lb/in^2	43	56	34	37
	C	967 lb	778	901	1874	1429
(B) REAR	A	366	391	410	357	297
	B	38	41	44	13	70
	C	1755	1874	1931	4986	628
(R,L) SIDE	A	77	140	173	143	177
	B	37	67	57	50	47
	C	81	148	263	203	331

1. For test modes or vehicle models not listed, use a structurally similar category or choose a category by wheelbase dimension from Table 1.1. (NASS teams should consult their Zone Center if in doubt as to proper stiffness category.)
2. Includes all model years unless otherwise specified.
3. Front and rear crash modes only; for side damage, pick a category (1 to 6) by wheelbase from Table 1.1.
4. Front crash mode only; for side and rear, pick a category (1 to 6) by wheelbase from Table 1.1.

NOTE: THE DATA INCLUDES VEHICLE MODEL YEARS FROM THE 1970'S. LABORATORY COLLISION TEST DATA FOR LATER MODEL VEHICLES IS BEING OBTAINED BY NHTSA AND WILL BE ADDED IN THE NEAR FUTURE.

TABLE 1.2 (Continued)

VEHICLE STIFFNESS CATEGORIES

NOTE: Stiffness Category # is required for CRASH3 Question 5.

STIFFNESS CATEGORY[1]		6	7	8	9	10	11
		Luxury	Vans & 4WD[3]	Pick-up[3]	Front Drive[4]	Movable Barrier	Immovable Barrier
2. VEHICLE MODELS		Riviera (-76) Eldorado (-78) Olds 98 Brghm. DeVille Electra Fleetwood Continental Checker Cab	Ford E150 Dodge B-200 Chev G-20 Ford P-500 GMC G-3500 GMC G-1500 VW Vanagon Datsun 4x4 p/u Honcho 4x4 p/u Wagoneer Scout II Chev. Blazer	Courier Ford F150 Chev LUV Ford F250 Dodge D-100 Ford F1001/2 ton Datsun p/u GMC 1500 Tcy. SR5 long. Ranchero El Camino Sprint	Citation Phoenix Skylark Omega Reliant Aries Escort Lynx		
(F) FRONT	A	325	383	480	373	--	--
	B	37	126	50	38	--	--
	C	1429	580	2315	1849	--	--
(B) REAR	A	297	300	346	SEE	--	--
	B	70	55	25		--	--
	C	628	818	2373	NOTE 4.	--	--
(R,L) SIDE	A	177	SEE	SEE	SEE	--	--
	B	47				--	--
	C	331	NOTE 3.	NOTE 3.	NOTE 4.	--	--

1. For test modes or vehicle models not listed, use a structurally similar category or choose a category by wheelbase dimension from Table 1.1. (NASS teams should consult their Zone Center if in doubt as to proper stiffness category.)
2. Includes all model years unless otherwise specified.
3. Front and rear crash modes only; for side damage, pick a category (1 to 6) by wheelbase from Table 1.1.
4. Front crash mode only; for side and rear, pick a category (1 to 6) by wheelbase from Table 1.1.

NOTE: THE DATA INCLUDES VEHICLE MODEL YEARS FROM THE 1970'S. LABORATORY COLLISION TEST DATA FOR LATER MODEL VEHICLES IS BEING OBTAINED BY NHTSA AND WILL BE ADDED IN THE NEAR FUTURE.

based on the vehicle's wheelbase should be used. The same logic applies to most pickup trucks, which are in category 8.

Category 9 is intended for most front-wheel drive vehicles for frontal impacts only. Notice that the larger front-wheel drive cars, such as the Cadillac El Dorado, are not included in category 9. Category 9 should only be used for frontal impact. If the vehicle is struck in the rear or side, it should be categorized based on its wheelbase.

1.4.3 Trajectory Description Questions

Questions 6-31 present a number of yes-no questions and associated requests for input. These questions are designed to elicit a description of each vehicle's path from separation to rest. Three questions are of primary importance, since, in combination, they describe six different path types that a vehicle might have traced. For each of the six path types, different assumptions and calculations are applied to the CRASH3 model in the determination of separation conditions.

The three important questions asked are whether a vehicle skidded, ceased skidding prior to coming to rest, and/or followed a curved path. If there is no skidding, there cannot be an end of skidding/rotation point; hence, Question 13 is skipped if Question 12 is answered "no" (corresponding questions are 19 and 20 for Vehicle 2). A non-skidding vehicle may follow a curved path, presumably caused by a non-zero steer angle. Thus, non-skidding paths are of two types: curved and non-curved. In each of these cases, the vehicle's separation speed is calculated based on the rolling resistance values supplied by the user.

The skidding referred to by Questions 12 and 19 is defined as rotational or lateral cases in which the front and rear wheels do not follow the same tracks. Cases with locked wheels that do track, or straight-line skidding in a forward direction, should be entered as non-skidding. In these cases, the rolling resistance values will indicate locked wheels.

There are four subdivisions of skidding path types in the CRASH3 model. These four types are determined by answers to Questions 13 and 20 about vehicle skidding ending prior to rest and Questions 15 and 22 which ask if the path was curved. The end of rotation prior to rest situation is described in this manual following Question 12. In a case with rotational or lateral skidding, the skidding path may be curved or straight. Curvature of the skidding path should be reflected by a "yes" answer to Question 15 or 22. In cases with an end of rotation point reached prior to rest, the curved path length is calculated between the impact, and end of rotation to rest is assumed to be straight.

The user is cautioned to review the trajectory description questions thoroughly and answer them carefully, since shifting "yes" and "no" answers

alter significant features of the CRASH3 model assumptions and the calculation methods. Alteration of these responses will lead to altered and possibly erroneous results.

QUESTION 6: Trajectory Data

Long Form: 6. ARE BOTH REST AND IMPACT POSITIONS KNOWN?
NOTE: A NEGATIVE RESPONSE LIMITS PROGRAM RESULTS TO VELOCITY CHANGE APPROXIMATIONS BASED ON DAMAGE DATA ONLY (ANSWER YES OR NO)

Short Form: 6. REST AND IMPACT (Y OR N)

A "no" response to this question will limit the program results to approximations based upon damage evidence only. If a "yes" response is entered, a series of detailed questions related to the spinout trajectories will be presented. In preparation for those questions, the trajectory evidence should be organized on a reference coordinate system as defined in the following paragraphs.

The space-fixed rectangular coordinate system that is used to define measured spinout trajectories for analysis via the CRASH3 program is shown in Figure 1.11. The relationship of the X' and Y' axes reflects the aeronautical convention for three-dimensional coordinates, in which the Z' axis points downward. In the selected planar coordinate system, the Y' axis is directed to the right of the X' axis and the angle ψ is measured

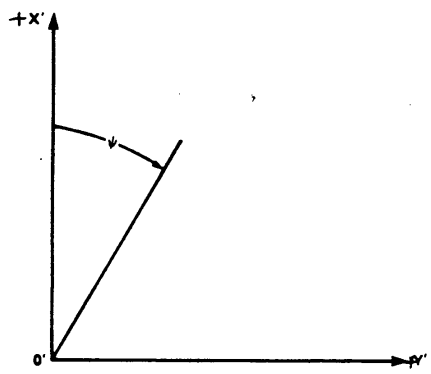

FIGURE 1.11 SPACE-FIXED COORDINATE SYSTEM

in the clockwise direction with respect to the X' axis.

While the position and orientation of the space-fixed reference coordinate system for a given case are arbitrary, it is generally desirable to relate them to permanent reference points at the accident scene such as curb lines and utility poles.

The position data requested in the trajectory questions refer to the location of the vehicle center-of-gravity (c.g.), something that is not readily measurable at the accident scene. The investigator will have to interpret the tire mark evidence to locate the front and rear wheels, and from these data ascertain the c.g. location. As a rule of thumb, the c.g. location in a great number of conventional automobiles is approximately 48% of the wheelbase from the front wheels. Because of the increasing number of front-engine, front-wheel drive, mid-engine rear-wheel drive combinations, a viable alternative to the exact location of the c.g. calculated from percentage of weight on the axle is to use the center of the wheelbase for the longitudinal location of the c.g.

QUESTION 7: Rest Positions

Long Form: 7. ENTER REST POSITIONS AND HEADINGS FOR VEHICLE 1 AND VEHICLE 2.
FORM: XCR1(FT) YCR1(FT) PSIR1(DEG) XCR2(FT) YCR2(FT) PSIR2(DEG).

Short Form: 7. REST COORDINATES?

On the space-fixed coordinate system (Figure 1.11) defined for the scene of a given case, enter the positions and orientations, at final rest, of the two vehicles. The heading angles may be entered as positive or negative quantities. If the vehicles have been moved prior to investigation, the true rest positions and orientations will have to be determined from scene evidence. Figure 1.12 shows the rest and impact positions of a hypothetical example case. There are no default values assigned in this question.

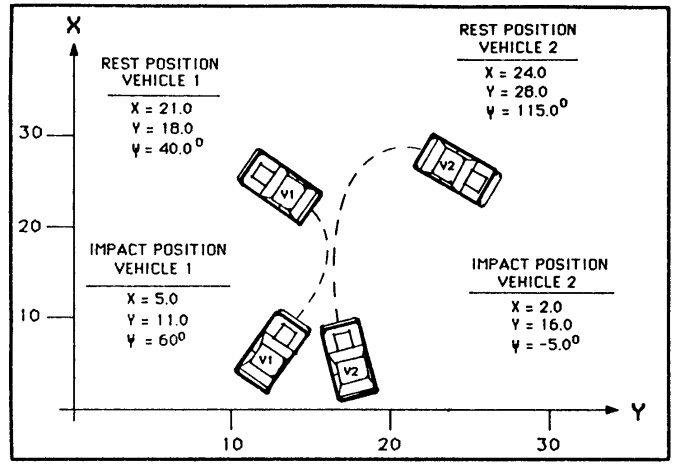

FIGURE 1.12 VEHICLE POSITION EVIDENCE

QUESTION 8: Impact Positions

Long Form: 8. ENTER IMPACT POSITIONS AND HEADINGS FOR VEHICLE 1 AND VEHICLE 2.
FORM: XC10(FT) YC10(FT) PSI10(DEG) XC20(FT) YC20(FT) PSI20(DEG).

Short Form: 8. IMPACT COORDINATES?

In the established space-fixed coordinate system (Figure 1.11), enter the positions and orientations of each vehicle at contact. A dimensional check, using a scaled sketch of the undeformed vehicle outlines, is usually helpful in assuring accurate definition of initial contact. Note that heading angles may be entered as either positive or negative quantities. Refer to the example shown in Figure 1.12 for an illustration of rest and impact coordinate positions. There are no default values assigned as a result of this question.

Subsequent to the response of Question 6, a compatibility check is performed to determine if the directions of principal force (PDOF) are compatible with each other and with the specified heading directions at impact. If a slight discrepancy exists, less than 15° from a 180° spread, a small adjustment of each PDOF is made.

A discrepancy greater than 15° will result in a diagnostic warning and a repeat of Questions 3 and 4, the CDC/PDOF questions.

QUESTIONS 9 AND 10: Pre-Impact Side-Slip Angles

Long Form: 9. DID EITHER OR BOTH VEHICLES HAVE A SIDE-SLIP ANGLE PRIOR TO IMPACT?
NOTE: SIDE-SLIP IS A DIRECTION OF MOTION THAT IS NOT STRAIGHT AHEAD (ANSWER YES OR NO)

Short Form: 9. ANY SLIP ANGLES?

Long Form: 10. ENTER THE SIDE-SLIP ANGLES FOR VEHICLE 1 AND VEHICLE 2.
NOTE: ENTRY IN + OR - DEGREES FROM STRAIGHT AHEAD.
FORMAT: BETA1 BETA2 (DEG.)

Short Form: 10. SLIP ANGLES 1 AND 2?

When pre-collision skidding occurs, the heading direction of the skidding vehicle is generally not aligned with its velocity vector at the point of impact. The angle between the heading direction and the velocity vector of the vehicle is referred to as the side-slip angle, BETA (see Figure 1.13).

If side-slip angles are specified in axial collision, the CRASH3 program will adjust the values entered by the user in response to Question 10 and print the adjusted values as part of the complete printout. The adjusted values are based on a comparison of damage and trajectory-based results for each vehicle which is performed when the linear momentum solution cannot be determined. If

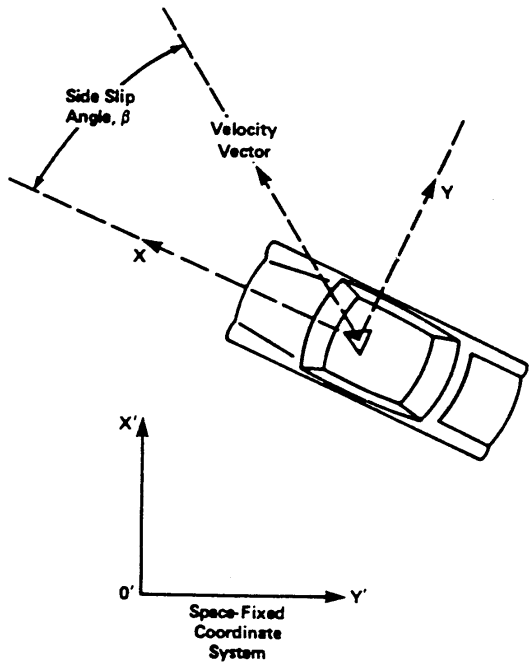

FIGURE 1.13 SIDE-SLIP ANGLE

side-slip angles are not entered, no adjustments will be made.

The introduction of side-slip angles creates an increased variety of impact configurations in which the initial velocity vectors may be nearly parallel, and, also, may deviate substantially from the condition of being colinear (e.g., see Figure 1.14). Therefore, the user should remember when running cases with side-slip or near head-on or rear-end collisions to examine results carefully.

$$350^\circ < |\psi_{10} - \psi_{20} + \beta_1 - \beta_2| < 10^\circ$$

OR

$$170^\circ < |\psi_{10} - \psi_{20} + \beta_1 - \beta_2| < 190^\circ$$

AND $d \neq 0$

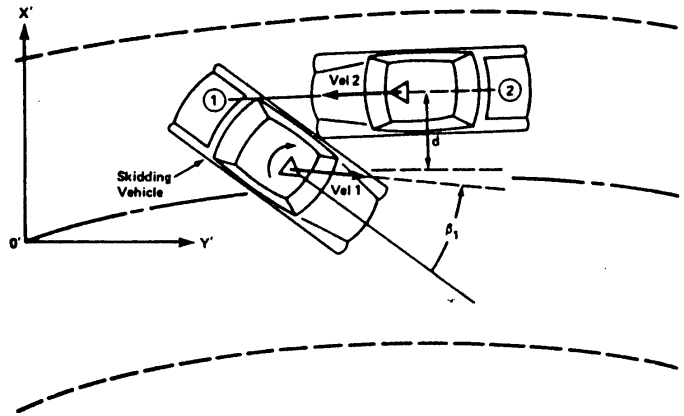

FIGURE 1.14 SAMPLE CASE DEMONSTRATING PRE-CRASH SLIP ANGLES AND PARALLEL VELOCITY VECTORS

QUESTION 11: Sustained Contact

Long Form: 11. WAS CONTACT BETWEEN THE VEHICLES SUSTAINED FROM IMPACT TO REST?
NOTE: A YES ANSWER INDICATES THAT VEHICLE TO VEHICLE CONTACT WAS MAINTAINED FROM IMPACT TO REST ANSWER YES OR NO).

Short Form: 11. SUSTAINED CONTACT? (Y OR N)

The question is designed to alert the CRASH3 program to situations in which the vehicle remained in contact from collision to rest. Under normal conditions, the CRASH3 program assumes that each vehicle moves independently from impact to rest, unhindered by the other vehicle. If this movement does not occur because the vehicles remain in continuing contact, special calculations must be invoked to model the spinout trajectory.

An example of a sustained contact collision is a case in which a parked car is hit broadside by a striking vehicle, and the struck vehicle is pushed laterally by the striking vehicle until they both come to rest. The important feature of sustained contact situations is that the trailing vehicle continues to push the leading vehicle until both vehicles come to rest. If nothing is entered by the user, sustained contact is assumed not to have

occurred. A default answer of "no" is therefore assumed if no answer is given.

If sustained contact did occur, the assumptions necessary to perform a trajectory simulation run are not valid. In sustained contact collisions, then, the spinout results cannot be checked by the optional simulation referred to in Question 32. The CRASH3 program will skip Questions 32-37 if the sustained contact question is answered "yes."

QUESTIONS 12 AND 19: Vehicle Skidding

Long Form: 12. DID ROTATIONAL AND/OR LATERAL SKIDDING OF VEHICLE #1 OCCUR?
NOTE: THIS REFERS TO THAT PORTION OF THE TRAJECTORY DURING WHICH THE FRONT AND REAR WHEELS DO NOT RUN IN THE SAME TRACKS (ANSWER YES OR NO)

19. DID ROTATIONAL AND/OR LATERAL SKIDDING OF VEHICLE #2 OCCUR?
NOTE: THIS REFERS TO THAT PORTION OF THE TRAJECTORY DURING WHICH THE FRONT AND REAR WHEELS DO NOT RUN IN THE SAME TRACKS (ANSWER YES OR NO)

Short Form: 12. SKIDDING OF #1? (Y OR N)

19. SKIDDING OF #2? (Y OR N)

The terms "rotational and/or lateral skidding" are used to refer to the vehicle motions in a portion of the trajectory during which the front and rear wheels do not run in the same tracks. If the vehicle did not track to final rest from impact, answer the question as "yes."

A "no" response to this question will result in the separation velocity of the vehicle being approximated entirely on the basis of the specified rolling resistances of the wheels (or

the longitudinal deceleration), as limited by the specified tire-terrain friction coefficient, and the total distance traveled between separation and rest using the traditional $V^2 = 2as$ relationship. The default response for this question is "no."

A "yes" response to the question causes the trajectory to be analyzed as either a non-rotating angular skid or as a spinning skid. The choice of these two alternatives is determined in the program by the user's response to Question 17 (Vehicle 1) and Question 24 (Vehicle 2) which query the user about the direction of rotation. As noted under the discussion of these questions, a response of "none" to the rotation direction (Q17 or Q24) and a "yes" response to these questions (Q12 or Q19) results in analyzing the trajectory as a non-rotating angular skid.

QUESTIONS 13 AND 20: End of Rotational and/or Lateral Skidding

Long Form: 13. DID ROTATIONAL AND/OR LATERAL SKIDDING OF VEHICLE #1 STOP BEFORE REST POSITION WAS REACHED?
NOTE: IT IS COMMON IN A SKIDDING TRAJECTORY TO HAVE AN ABRUPT CHANGE IN MOTION AS THE WHEELS START TRACKING ONE ANOTHER AND THE VEHICLE MOVES OUT TO REST IN A NON-SKIDDING FASHION. OF COURSE, THE NON-SKID SECTION MAY BE A STRAIGHT LINE OR A CURVED PATH DEPENDING ON THE STEER CONDITIONS (ANSWER YES OR NO)

20. DID ROTATIONAL AND/OR LATERAL SKIDDING OF VEHICLE #2 STOP BEFORE REST POSITION WAS REACHED?
NOTE: IT IS COMMON IN A SKIDDING TRAJECTORY TO HAVE AN ABRUPT CHANGE IN MOTION AS THE WHEELS START TRACKING ONE ANOTHER AND THE VEHICLE MOVES OUT TO REST IN A NON-SKIDDING FASHION. OF COURSE, THE NON-SKID SECTION MAY BE A STRAIGHT LINE OR A CURVED PATH DEPENDING ON THE STEER CONDITIONS (ANSWER YES OR NO)

Short Form: 13. SKIDDING STOP BEFORE REST? (Y OR N)

20. SKIDDING STOP BEFORE REST? (Y OR N)

A relatively common occurrence in the vehicle trajectories subsequent to a collision, in which rotational and/or lateral skidding occurs, is an abrupt change in the direction of vehicle motion as the skidding stops and the longitudinal motion continues (either forward or backward) in a direction determined by the heading direction at the stop of the skidding. Note that damage-locked wheels and/or steered angles can produce a curved path in the final portion of the trajectory, subsequent to the end of rotational and/or lateral skidding.

The response to this question must be based on a detailed review of tire mark and other trajectory evidence. The default answer for this question is "no." Note that the default response may be inappropriate in the case of a small rotation, since it implies that rotational "skidding" was maintained throughout the spinout.

Figure 1.15 illustrates an end-of-rotation occurrence in a typical accident. Observe that Vehicle 1 stops sliding and rolls out to rest in a non-skidding fashion. Note also that the non-skidding trajectory is slightly curved due to the damaged right front wheel. Figure 1.16

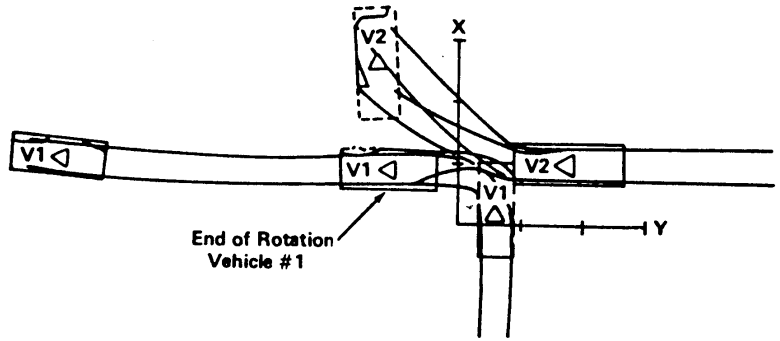

FIGURE 1.15 EXAMPLE END-OF-ROTATION SITUATION

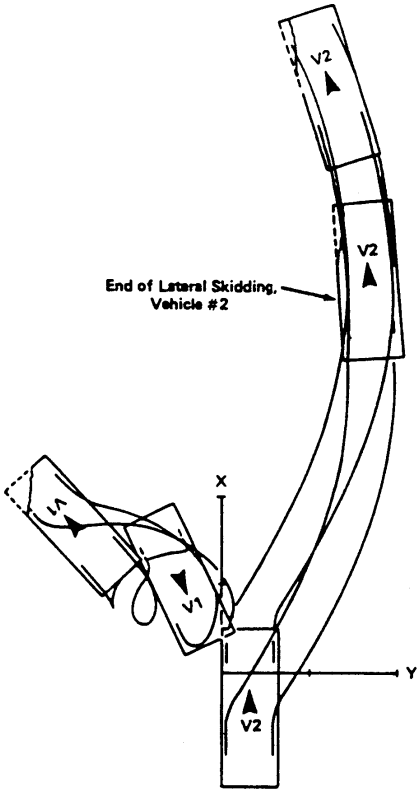

FIGURE 1.16 EXAMPLE END-OF-LATERAL SKIDDING SITUATION

illustrates an end-of-lateral-skidding occurrence in a typical accident. Again, the non-skidding trajectory is slightly curved.

QUESTIONS 14 AND 21: End of Rotational and/or Lateral Skidding Position

Long Form: 14. ENTER POSITION AND HEADING OF VEHICLE #1 AT END OF ROTATIONAL AND/OR LATERAL SKIDDING
NOTE: RESPONSE SHOULD DEFINE THE POSITION AND HEADING OF THE VEHICLE AT THE POINT IN THE TRAJECTORY AT WHICH THE FRONT AND REAR WHEELS RUN IN THE SAME TRACKS
FORM: XC11(FT) YC11(FT) PSI11(DEG)

21. ENTER POSITION AND HEADING OF VEHICLE #2 AT END OF ROTATIONAL AND/OR LATERAL SKIDDING
NOTE: RESPONSE SHOULD DEFINE THE POSITION AND HEADING OF THE VEHICLE AT THE POINT IN THE TRAJECTORY AT WHICH THE FRONT AND REAR WHEELS RUN IN THE SAME TRACKS
FORM: XC12(FT) YC12(FT) PSI12(DEG)

Short Form: 14. END OF SKIDDING COORDINATES?

21. END OF SKIDDING COORDINATES?

If an end of rotational and/or lateral skidding condition is implied by the evidence, enter the space-fixed c.g. position of the point where the front and rear wheels start to run in the same tracks. Refer to Figures 1.15 and 1.16 for examples. The default entry assigned to this question automatically sets the end of rotational

and/or lateral skidding position to equal the rest position.

QUESTIONS 15 AND 22: Presence of a Curved Trajectory

Long Form: 15. WAS THE SPINOUT PATH OF VEHICLE 1 BETWEEN SEPARATION AND REST (OR STOP OF ROTATION) CURVED?
NOTE: TRY TO VISUALIZE THE PATH OF THE VEHICLE C.G. IF A PROMINENT ARC IS PRESENT, ANSWER AFFIRMATIVELY (ANSWER YES OR NO)

22. WAS THE SPINOUT PATH OF VEHICLE 2 BETWEEN SEPARATION AND REST (OR STOP OF ROTATION) CURVED?
NOTE: TRY TO VISUALIZE THE PATH OF THE VEHICLE C.G. IF A PROMINENT ARC IS PRESENT, ANSWER AFFIRMATIVELY (ANSWER YES OR NO)

Short Form: 15. CURVED PATH? (Y OR N)

22. CURVED PATH? (Y OR N)

If a "no" response is entered, the direction of the resultant linear velocity at separation is determined by the rest (or stop of skidding) position and a simple empirical function of the linear speed-change during rotation, the angular speed-change, and the corresponding displacements.[7] The resultant linear velocity at separation is used, in turn, to establish the velocities of the two vehicles at impact by means of conservation of momentum relationships. Thus, a strongly curved trajectory can introduce

significant error in the velocity calculations by producing a rest position that results in an erroneous direction of motion at separation (Figure 1.17). The curved path question is aimed at introducing a correction in the direction of motion subsequent to separation in those cases where clear evidence of a curved trajectory exists. In most cases, a "no" response is appropriate. The default value assigned to this question is "no."

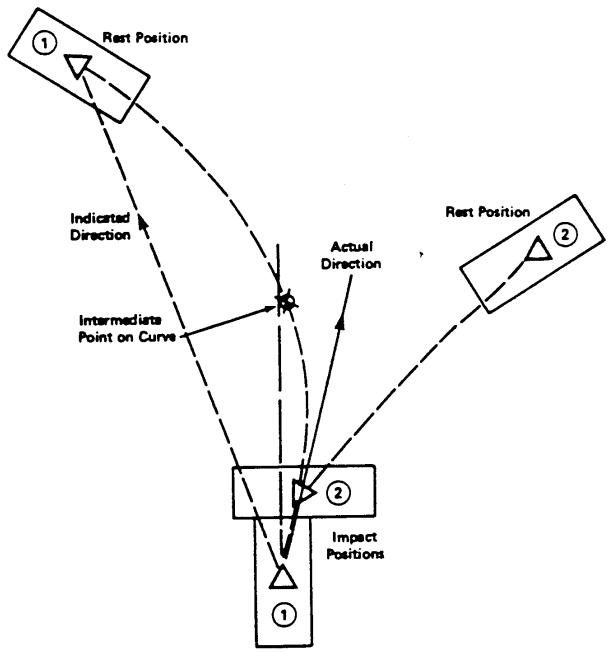

FIGURE 1.17 EFFECTS OF CURVED TRAJECTORY ON INDICATED DIRECTION OF MOTION AT SEPARATION

QUESTIONS 16 AND 23: Intermediate Point on a Curved Trajectory

Long Form: 16. ENTER AN INTERMEDIATE POSITION OF VEHICLE 1 ON THE CURVED PATH BETWEEN SEPARATION AND REST (OR STOP-OF-ROTATION).
FORM: XC21(FT) YC21(FT)

23. ENTER AN INTERMEDIATE POSITION OF VEHICLE 2 ON THE CURVED PATH BETWEEN SEPARATION AND REST (OR STOP-OF-ROTATION).
FORM: XC22(FT) YC22(FT)

Short Form: 16. POINT ON CURVE?

23. POINT ON CURVE?

If a curved path has been noted, enter the X and Y coordinates of an intermediate point on the curve. Refer to Figure 1.17 for an example. If the default option is entered, then the curved path question is reset to "no" and no curved point is stored. The intermediate point should be somewhere near the middle of the arc in order to provide the best estimate of the vehicle's trajectory.

QUESTIONS 17 AND 24: Vehicle Rotation Direction

Long Form: 17. WHICH DIRECTION DID VEHICLE #1 ROTATE?
NOTE: CLOCKWISE ROTATION TURNS FROM THE X-AXIS TOWARDS THE Y-AXIS. FOR THE CASE OF PURELY LATERAL SKIDDING ENTER NONE (RESPOND WITH: CW CCW NONE)

24. WHICH DIRECTION DID VEHICLE #2 ROTATE?
NOTE: CLOCKWISE ROTATION TURNS FROM THE X-AXIS TOWARDS THE Y-AXIS. FOR THE CASE OF PURELY LATERAL SKIDDING ENTER NONE (RESPOND WITH: CW CCW NONE)

Short Form: 17. ROTATION DIRECTION #1?

24. ROTATION DIRECTION #2?

For the case of purely lateral skidding, the proper answer is "none." The user is advised to exercise care in assigning the rotation direction. An erroneous rotation direction can sometimes cause the program to yield outlandish results. The default value assigned to this question is "none." Referring to the example in Figure 1.15, Vehicle 1 rotates counterclockwise (CCW) while Vehicle 2 rotates clockwise (CW).

QUESTIONS 18 AND 25: Greater Than 360 Degree Rotation

Long Form: 18. DID VEHICLE #1 ROTATE MORE THAN 360 DEGREES BETWEEN SEPARATION AND REST
NOTE: THIS IS A RARE OCCURRENCE AND SHOULD BE VERIFIED FROM TIRE MARK DATA (ANSWER YES OR NO)

25. DID VEHICLE #2 ROTATE MORE THAN 360 DEGREES BETWEEN SEPARATION AND REST
NOTE: THIS IS A RARE OCCURRENCE AND SHOULD BE VERIFIED FROM TIRE MARK DATA (ANSWER YES OR NO)

Short Form: 18. MORE THAN 360 DEG? (Y OR N)

25. MORE THAN 360 DEG? (Y OR N)

Rotations of more than 360 degrees are relatively rare. The response to this question clearly should be based on the available scene evidence. The default reply is "no."

QUESTION 26: Nominal Tire-Ground Friction Coefficient

Long Form: 26. ENTER THE NOMINAL TIRE-GROUND FRICTION COEFFICIENT?
NOTE: REFER TO TABLE 2 IN THE CRASH USERS GUIDE FOR TYPICAL TIRE-GROUND VALUES
FORM: MU

Short Form: 26. TIRE-GROUND FRICTION?

The user is referred to texts on accident reconstruction which contain tables of representative ranges of tire-ground friction coefficients on different surfaces.[15] Table 1.3 shows some typical coefficients of friction for several road-surface materials and conditions. Where possible, an attempt should be made to obtain directly measured friction data (e.g., stopping tests, pendulum tests, etc.) in view of the critical importance of this data item to the accuracy of the trajectory analysis.

The trajectory analysis portion of the CRASH3 program is based on a calculation of the energy dissipation through work done against friction forces during the spinout. Therefore, it is possible, in a straightforward manner, to handle a case in which surfaces with different friction coefficients are traversed. An "equivalent"

TABLE 1.3

COEFFICIENTS OF FRICTION OF VARIOUS ROADWAY SURFACES

DESCRIPTION OF ROAD SURFACE	DRY				WET			
	Less than 30 mph		More than 30 mph		Less than 30 mph		More than 30 mph	
	From	To	From	To	From	To	From	To
PORTLAND CEMENT								
New, Sharp	.80	1.20	.70	1.00	.50	.80	.40	.75
Travelled	.60	.80	.60	.75	.45	.70	.45	.65
Traffic Polished	.55	.75	.50	.65	.45	.65	.45	.60
ASPHALT or TAR								
New, Sharp	.80	1.20	.65	1.00	.50	.80	.45	.75
Travelled	.60	.80	.55	.70	.45	.70	.40	.65
Traffic Polished	.55	.75	.45	.65	.45	.65	.40	.60
Excess Tar	.50	.60	.35	.60	.30	.60	.25	.55
GRAVEL								
Packed, Oiled	.55	.85	.50	.80	.40	.80	.40	.60
Loose	.40	.70	.40	.70	.45	.75	.45	.75
CINDERS								
Packed	.50	.70	.50	.70	.65	.75	.65	.75
ROCK								
Crushed	.55	.75	.55	.75	.55	.75	.55	.75
ICE								
Smooth	.10	.25	.07	.20	.05	.10	.05	.10
SNOW								
Packed	.30	.55	.35	.55	.30	.60	.30	.60
Loose	.10	.25	.10	.20	.30	.60	.30	.60

Reproduced from: Baker, J.S., Traffic Accident Investigation Manual, The Traffic Institute, Northwestern University, 1975.

single friction coefficient that will dissipate the same amount of energy can be determined in the following manner:

$$\mu_{eq} = \frac{(\mu_1 S_1 + \mu_2 S_2 + \ldots \mu_n S_n)}{(S_1 + S_2 + \ldots S_n)}$$

where μ_{eq} = "Equivalent" single friction coefficient.

S_i = Distance traveled through region with friction coefficient = μ_i.

μ_i = Friction coefficient for each surface traveled.

When an "equivalent" single friction coefficient does not adequately describe the friction coefficients acting on the vehicle in an accident, it may be necessary to utilize the terrain boundary and second friction coefficient options available in the trajectory simulation subroutine (see Questions 32-37).

QUESTION 27: Rolling Resistance Option

Long Form: 27. ROLLING RESISTANCE MAY BE ENTERED AS:
1 --- THE DECIMAL PORTION OF FULL ROTATIONAL LOCK-UP AT EACH WHEEL
2 --- THE LEVEL OF LONGITUDINAL DECELERATION, IN G UNITS, PRODUCED BY ROTATIONAL RESISTANCE AT THE WHEELS
(ANSWER 1 OR 2)

Short Form: 27. ROLLING RESISTANCE OPTION? (1 OR 2)

A low level of rolling, or rotational, resistance of the wheels of an automobile always exists as the result of tire properties, wheel bearing friction and residual brake drag. However, in most collisions, other sources of rolling resistance predominate during the spinout motions subsequent to the collision.

For example, individual wheels may be completely prevented from rotating by contact with deformed sheet metal and/or vehicle structure. A locked up drive wheel will cause the full drive engine braking resistance to be applied at the other drive wheel through the coupling of the differential gears. Also, tires may be deflated by the direct effects of rim damage and/or cuts in the tires. In addition, brake applications are

sometimes maintained by the driver throughout the collision and spinout motions. Engine/drive line braking at the drive wheels can also make a significant contribution to the effective rolling resistance during the spinout.

Clearly, the entered values of rolling resistance for the two vehicles must be based on a detailed review of damage, tire mark, and other trajectory evidence.

The CRASH3 calculations do not distinguish which of the individual wheels are the sources of longitudinal deceleration. Therefore, the equivalent use of options 1 and 2 will yield identical results from CRASH3. However, the trajectory simulation option and the generation of SMAC inputs (an optional output of CRASH3) require the use of option 1. Also, in the CRASH3 outputs, the use of option 1 will establish a detailed record of the basis for the CRASH3 reconstruction; for example, "LF wheel locked up by damage, engine braking at rear."

In the discussion of Questions 28 through 31, representative rolling resistance values are presented to guide the selection of inputs. Entry values corresponding to each source of rolling

resistance present at a given wheel, short of full lock-up, should be added.

The default option assigned to this question is choice 1, the individual entry of the decimal portion of full lock-up at each wheel.

QUESTIONS 28 AND 29: Rolling Resistance Entry--
Option 1

Long Form: 28. ENTER ROLLING RESISTANCES OF
WHEELS OF VEHICLE #1
NOTE: CAN BE CAUSED BY BRAKING,
DAMAGE, ENGINE BRAKING,
ETC. ENTER VALUE FOR EACH
WHEEL FROM 0.0 TO 1.0
1.0 = FULL WHEEL LOCK-UP
FORM: RF LF RR LR

29. ENTER ROLLING RESISTANCES OF
WHEELS OF VEHICLE #2
NOTE: CAN BE CAUSED BY BRAKING,
DAMAGE, ENGINE BRAKING,
ETC. ENTER VALUE FOR EACH
WHEEL FROM 0.0 TO 1.0
1.0 = FULL WHEEL LOCK-UP
FORM: RF LF RR LR

Short Form: 28. ROLL. RESISTANCES, INDIV. WHEELS
#1

29. ROLL. RESISTANCES, INDIV. WHEELS
#2

To achieve a given longitudinal deceleration level via this form of rolling resistance input, consideration must be given to the entered value for the tire-ground friction coefficient. The decimal quantity, between 0.0 and 1.00, that is entered for each wheel defines the portion of the full available friction force acting at that individual wheel in the longitudinal direction. Since an equal distribution of weight is assumed

in this approximation, the sum of the individual decimal quantities entered for the four wheels may be divided by four and multiplied by the tire terrain friction coefficient to obtain the longitudinal deceleration level in G units.

As previously noted, this option serves to provide a record of the rolling resistances at individual wheels used in the CRASH3 reconstruction (i.e., it defines how the total longitudinal deceleration was produced). It can also serve to generate corresponding inputs for optional trajectory simulation (Question 32) and/or the SMAC program. For these purposes, the entry sequence of RF, LF, RR, LR is important. No default entry is available on this question.

There are many factors which contribute to the rolling resistance. Three of the most important factors are the rolling resistance of the tire-wheel drive train mechanism, the resistance due to engine drag, and resistance due to wheel damage and brake application by the driver. The decimal entry can be calculated as follows for each individual wheel. Since the resultant amount of lock-up is the sum of the contributions from rolling resistance of the wheels, engine braking,

wheel damage, and driver braking, the following equation can be written.

$$1.0 > (N = n_1 + n_2 + n_3 + n_4) > 0.0 \qquad (1.2)$$

where N = The decimal entry of an individual wheel corresponding to the amount of wheel lock-up.

n_1 = Contribution due to tire-wheel-drive train rolling resistance.

n_2 = Contribution due to engine braking.

n_3 = Contribution due to wheel or brake system damage.

n_4 = Contribution due to driver application of brakes.

The tire-wheel-drive train resistance arises from normal frictional forces acting on these components. Equation (1.3) gives an expression for the tire-wheel-drive train resistance assuming that the wheels are undamaged and the vehicle is rolling in neutral gear.

$$n_1 = \begin{cases} 0.010/\mu & \text{For normal tire inflation} \\ 0.013/\mu & \text{For partial tire inflation} \\ 0.017/\mu & \text{For flat tire} \end{cases} \qquad (1.3)$$

where μ = The tire-road surface coefficient of friction entered in Question 26.

Few vehicles collide in neutral, however. The engine braking contribution, n_2, therefore accounts for the increase in resistance due to engine braking as shown in equation (1.4).

$$n_2 = \begin{cases} 0.20/\mu & \text{For high gear} \\ 0.40/\mu & \text{For low gear} \end{cases} \qquad (1.4)$$

Engine braking is, of course, only effective at the drive wheels. In most front or rear wheel drive vehicles, two wheels would experience engine braking effects. Four wheel drive vehicles with the front axle engaged would experience engine braking at all four wheels.

Unfortunately, the contribution of wheel or brake system damage is much more subjective than n_1 and n_2. The amount of damage must be between 0 and 1. A value of 1 would represent a situation where the wheel is completely locked in position as would be the case if it were wedged between crushed portions of the fender. Often the wheel's motion is inhibited, though not fully locked, and in such a case the user must use his judgment in assigning a value for n_3.

$$0.0 \le n_3 \le 1.0 \qquad (1.5)$$

The final contributor to the amount of lock-up is braking by the driver. Again, this is a very

subjective item. If the driver fully locks his brakes, a 1 should be entered; conversely, if the driver does not use the brakes at all, 0 should be used. Of course, partial braking is much more difficult to quantify. The value, however, must be between zero and one as shown in equation (1.6).

$$0.0 \leq n_4 \leq 1.0 \qquad (1.6)$$

Once values have been found for n_1 through n_4, the decimal entry for that wheel can be calculated and entered. The user should ensure the value of N is between zero and one. If a value greater than one is calculated, the user should use the value one.

The following example will help illustrate the process of calculating the amount of wheel lock-up.

EXAMPLE

A value of μ = 0.70 (cement road surface) was entered in Question 26. The left front tire was wedged between the crushed front bumper and the driver's side firewall. Both left tires were completely deflated in the collision. This rear wheel drive vehicle was traveling on an Interstate highway at full speed so it is most likely that the vehicle was in high gear. There is also no

indication the driver applied the brakes. The decimal entries appropriate for answering Questions 28 and 29 are:

	Right Front	Left Front	Right Rear	Left Rear
n_1	0.015	0.024	0.015	0.024
n_2	0.000	0.000	0.286	0.286
n_3	0.000	1.000	0.000	0.000
n_4	0.000	0.000	0.000	0.000
N	0.015	1.000	0.301	0.310

A more complete description of factors influencing rolling resistances can be found in Reference 28.

QUESTIONS 30 AND 31: Rolling Resistance Entry - Option 2

Long Form: 30. ENTER LONGITUDINAL DECELERATION, IN G-UNITS, PRODUCED BY ROTATIONAL RESISTANCE AT THE WHEELS OF VEHICLE #1
NOTE: ENTER A SINGLE DECELERATION LESS THAN FRICTION VALUE
FORM: DECEL.

31. ENTER LONGITUDINAL DECELERATION, IN G-UNITS, PRODUCED BY ROTATIONAL RESISTANCE AT THE WHEELS OF VEHICLE #2
NOTE: ENTER A SINGLE DECELERATION LESS THAN FRICTION VALUE
FORM: DECEL.

Short Form: 30. DECEL. LEVEL #1

31. DECEL. LEVEL #2

For this option, a single entry is required. It should be noted that the entered value must be less than the entered tire-ground friction coefficient (Question 26) or a diagnostic message will result. There is no default value permitted for this question.

Calculating the rolling resistance in G units is similar to the method described in Questions 28 and 29 with the exception that only one value is

entered. The deceleration is a combination of rolling resistance, engine braking and wheel-brake system damage.

$$G = g_1 + g_2 + g_3 + g_4 \tag{1.7}$$

G = Total effective deceleration due to the contributions of g_1 through g_4.

g_1 = Contribution due to rolling resistance of the tire-wheel-drive train mechanism.

g_2 = Contribution due to engine braking.

g_3 = Contribution due to wheel or brake system damage.

g_4 = Contribution due to driver application of the brakes.

The equations describing g_1 through g_4 are shown below.

$$g_1 = \begin{cases} 0.010 & \text{Normal tire inflation} \\ 0.013 & \text{Partial tire inflation} \\ 0.017 & \text{Flat tire} \end{cases} \tag{1.8}$$

$$g_2 = \begin{cases} 0.10 & \text{Transmission in high gear} \\ 0.20 & \text{Transmission in low gear} \end{cases} \tag{1.9}$$

$$g_3 = \frac{1}{4} n_3 \mu \tag{1.10}$$

$$g_4 = \frac{1}{4} n_4 \mu \tag{1.11}$$

where n_3 = Percent of lock-up due to damage.

n_4 = Percent of lock-up due to braking.

μ = Coefficient of friction from Question 26.

EXAMPLE

The sample example will be used to illustrate the calculation of the rolling resistance in g units as was used to illustrate the rolling resistance as a percent. The coefficient of friction was determined to be 0.70; both left tires were deflated and the left-front tire was locked in place. No braking was indicated and the transmission was presumed to be in high gear. The rolling resistance in G units is therefore

$g_1 = (0.01 + 0.01 + 0.017 + 0.017)/4 = 0.0135$

$g_2 = 0.10$

$g_3 = 0.25\ (0.7)\ (0.0 + 1.0 + 0.0 + 0.0) = 0.175$

$g_4 = 0$

$G = 0.0135 + 0.1 + 0.175 = 0.29$ g's

It should be noticed that the rolling resistance in g units corresponds to the rolling resistance as a percentage. The sum of the N values for the four wheels in the example of Question 28 is

$1.63 = 0.015 + 1.0 + 0.301 + 0.310$

If all four wheels were fully locked, the sum of the four N values would have been 4. The percent of lock-up for the total vehicle is therefore 1.63/4.0 = 0.41. If this is multiplied by 0.70, the coefficient of friction, the rolling

resistance in g units is calculated to be 0.29 g's, which is identical to the above formulation.

1.4.4 Trajectory Simulation Questions

In this optional test, the CRASH3-calculated separation velocities (i.e., linear and angular) are tested via application of a time-history simulation routine to the "spinout trajectory" of each vehicle. The simulation calculates a spinout time-history that is compared with the entered physical evidence entered in Questions 6-25. If the first trajectory iteration result agrees within acceptable limits with the measured evidence, the CRASH3 separation velocities are used unaltered to calculate impact speeds and speed changes. If a disagreement exists, the trajectory routine will automatically adjust the CRASH3 approximations of separation velocities in a sequence of up to five attempts to achieve an acceptable level of agreement. The results from the five runs that have the best agreement with the measured evidence are used in place of the CRASH3 results to calculate impact speeds and speed changes. This iterative technique will usually provide a modest improvement in the CRASH3 results or at least give some measure of confidence in the original results. The trajectory calculations, consisting of repetitive, step-by-step time-history computations, can increase the

run time of CRASH to as much as four (4) hours. The simulation routine that is applied in this test is based on the trajectory portion of the Simulation Model of Automobile Collisions (SMAC) computer program using the mainframe version.[16] A trajectory simulation using the microcomputer version of CRASH3 is not recommended since the simulation will require even more time. A similar, almost as accurate, option to the trajectory simulation is available in the Graphics Program (CRGRAF) when the microcomputer version of CRASH3 is being used. The CRGRAF utilizes the field observations on vehicle skidding behavior starting at its separation position and running to its rest position to produce a justified estimate of the linear and angular velocity to match trajectory evidence. The assigned default answer for this question is "NO."

It is possible for a predominantly longitudinal spinout motion with low values for the rolling resistance inputs (Questions 28 and 29) and/or the tire-ground friction coefficient (Question 26) to fail to stop completely within the allotted time interval of the trajectory simulation. In such cases, the printout will indicate that the trajectory "timed out." In this event, the

trajectory runs are cancelled and the CRASH3-generated separation velocities are retained for subsequent calculations.

QUESTION 32: Trajectory Simulation

Long Form: 32. DO YOU WANT THE RESULTS CHECKED BY A TRAJECTORY SIMULATION?
NOTE: THE SEPARATION VELOCITIES NORMALLY CALCULATED BY CRASH ARE USED BY A TRAJECTORY SIMULATION TO DETERMINE IF THE ENTERED EVIDENCE MATCHES THE CALCULATED SPEEDS. IF NOT, APPROPRIATE SPEED ADJUSTMENTS ARE MADE TO OBTAIN AGREEMENT WITH EVIDENCE.
*** WARNING *** THIS OPTION WILL RESULT IN VERY LENGTHY RUNNING TIMES ON THE MICROCOMPUTER. YOU CAN OBTAIN A TRAJECTORY WHICH IS ALMOST AS ACCURATE BY RUNNING THE GRAPHICS PROGRAM CRGRAF AFTER ENDING THIS PROGRAM.
(ANSWER YES OR NO).

Short Form: 32. TRAJ. SIMULATION? (*** THIS WILL TAKE A LONG TIME IF SELECTED ***) (Y OR N)

Microcomputer users are encouraged to utilize the trajectory simulation routine in the CRGRAF graphics program instead of selecting this option. Answering this question with a YES response will greatly increase the run time while not significantly improving the results. It is therefore recommended that a NO response be entered for this question.

QUESTIONS 33 AND 34: Steer Angles

Long Form: 33. ENTER THE STEER ANGLES FOR EACH WHEEL OF VEHICLE #1?
NOTE: LIMIT ANGLES TO PLUS OR MINUS 90 DEGREES FROM STRAIGHT AHEAD
FORM: RF LF RR LR
(DEG.)

34. ENTER THE STEER ANGLES FOR EACH WHEEL OF VEHICLE #2?
NOTE: LIMIT ANGLES TO PLUS OR MINUS 90 DEGREES FROM STRAIGHT AHEAD
FORM: RF LF RR LR
(DEG.)

Short Form: 33. STEER ANGLES #1?

34. STEER ANGLES #2?

The trajectory simulation requires specification of the wheel steer angles for all four wheels to account for steer and/or damage effects, although steer angles play no part in the normal CRASH3 calculations. Enter the angles for each wheel in degrees, ranging between plus and minus ninety degrees from straight ahead. Users should remember that a full right (+) or left (-) steer in most vehicles is less than 25 degrees of steered angle in either direction at the front wheels. The default answer assigned for this question is zero degrees for all wheels.

QUESTION 35: Terrain Boundary

Long Form: 35. IS THERE A TERRAIN BOUNDARY?
(ANSWER YES OR NO)

Short Form: 35. TERRAIN BOUNDARY? (Y OR N)

The optional trajectory simulation includes provision for input of a straight-line boundary between terrain zones with different friction properties. For example, the surface of the shoulder of a highway may have friction properties that are significantly different from those of the pavement. In such cases, this feature of the trajectory simulation provides a detailed transition across the boundary by using the friction properties at the locations of the individual wheels for each solution point in the time-history.

QUESTION 36: Boundary Points

Long Form: 36. ENTER A TWO POINT FRICTION
BOUNDARY DEFINITION
NOTE: KEY IN THE X AND Y VALUES
OF THE ENDPOINTS
FORM: XBP(1) YBP(1)
XBP(2) YBP(2)
(FEET)

Short Form: 36. BOUNDARY POINTS?

For use in the trajectory simulation check, two zones, separated by a straight line, may be defined. The zone which contains the origin has the friction coefficient entered in Question 26. The non-origin side of the terrain boundary line has a friction coefficient that is defined in the following Question 37. Therefore, the response to this question should be the X and Y coordinates, in feet, of two points that define a line separating the two areas of interest. The default values for these questions are the points (-600., 600.) and (600., 600.). The terrain boundary option is discussed further in McHenry.[16]

QUESTION 37: Secondary Friction Coefficient

Long Form: 37. ENTER THE FRICTION COEFFICIENT OF THE NON-ORIGIN SIDE OF THE FRICTION BOUNDARY
NOTE: COEFFICIENT OF ORIGIN SIDE HAS ALREADY BEEN ENTERED
FORM: MU2

Short Form: 37. SECONDARY FRICTION COEF.?

This question is self-explanatory. There is no default assigned, so the question must be answered. Allowable values are from 0.0 to 1.0 as defined in Question 26.

1.4.5 Vehicle Damage Questions

It is highly desirable, for the purpose of achieving accurate results, to enter actual measured damage dimensions whenever possible. The CRASH3 program is set up to accept and apply incomplete damage dimensions for either or both vehicles. For the case of partial but incomplete damage dimensions, a "yes" response should be entered for Question 38 and the default values should then be chosen by striking the <ENTER> key when a value is not known in Questions 39 through 50. In this manner, a case with partial or complete damage dimensions for one vehicle and a CDC only for the other vehicle can be run. The user should be cautioned, however, that results obtained by using the default damage dimensions should be treated with a great deal of suspicion.

The required dimensions for a complete definition of the damage are (1) the width of the crushed region, Question 39; (2) the extent of the damage at several positions within the damaged region, Question 40; and (3) the location of the midpoint of the damaged region with respect to the center of mass of the vehicle, Question 41. The required dimensions are depicted in Figure 1.18. Also shown in Figure 1.18 are body-fixed coordinate

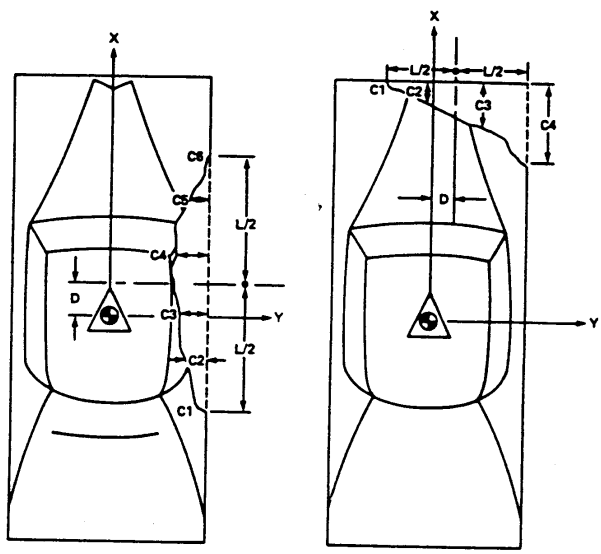

FIGURE 1.18 DAMAGE DIMENSIONS

systems with origins at the centers of mass of the vehicles and the same sign convention as the space-fixed reference system defined in the discussion of Question 6.

Although vehicle damage dimensions are very important for accurate CRASH3 results, the methodologies developed to gather these measurements are beyond the scope of this guide. It is strongly suggested that users study relevant references to become familiar with the vehicle measurement techniques necessary to obtain valid and accurate data for use in the CRASH3 program.

The dimension D to the midpoint of the damaged region must be entered with an algebraic sign corresponding to that of the Y (end impact) or X (side impact) coordinate of the damage midpoint, in the body-fixed coordinate system. This dimension, in combination with the direction of the resultant force, is used to determine the effective mass of the subject vehicle at the point that achieves a common velocity with the corresponding point on the other vehicle in the collision.

In the absence of actual damage dimensions, the CRASH3 program generates approximations of the

required dimensions on the basis of the entered CDC (Collision Deformation Classification, see Appendix B). Note that a D category in Column 4 of the Collision Deformation Classification does not distinguish between uniform and angled crush profiles. Therefore, a two-point definition of the damage extent at the edges of the damaged area is necessary in such cases to avoid the default assumption that the damage extent profile is uniform.

The simplified analytical treatment of vehicle structures that is currently implemented by the CRASH3 program is based on an assumption of linear relationships between impact speed-change (ΔV) and residual crush at the front, sides, and rear. While the specific, corresponding load-deflection relationships are different at the front, sides, and rear, they are each assumed to apply uniformly along the width or length of the given portion of the vehicle structure.

In documenting the crush or deformation to a motor vehicle, accident investigators recognize and record the direct and the induced damage. Direct damage is that deformation associated with displacement of sheet metal/ structure under the direct contact of collision forces. Indirect

damage is that deformation not associated directly with collision forces but occurs as a result of direct damage. Examples of induced damage are shown in Figures 1.19a and 1.19b. Experience indicates that the inclusion or exclusion of the induced damage in a side impact such as Figure 1.19a does not significantly influence the result because the amount of induced damage is generally relatively small in comparison with the direct damage. On the other hand, in narrow object impacts or in cases for which the collision forces are confined to a narrow area, as in Figure 1.19b, experience indicates that the exclusion of the induced damage results in a substantial underestimation of the energy of deformation. For this reason, a general rule has evolved that specifies the inclusion of induced and direct damage in the profile of damage for CRASH computation.

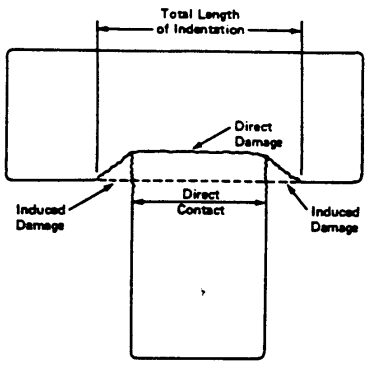

FIGURE 1.19(a)

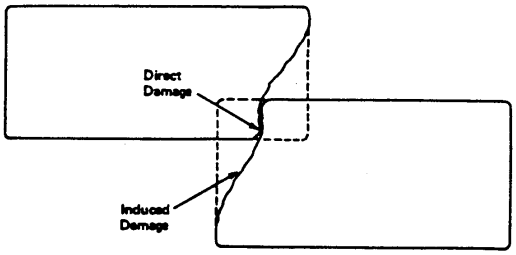

FIGURE 1.19(b)

FIGURE 1.19 EXAMPLES OF INDUCED DAMAGE

QUESTION 38: Damage Data

Long Form: 38. ARE ANY ACTUAL DAMAGE DIMENSIONS KNOWN?
NOTE: A NEGATIVE RESPONSE WILL PRODUCE DAMAGE DATA BASED ON THE SUBMITTED CDC. OBVIOUSLY, PROVIDING DAMAGE MEASUREMENTS WILL ENHANCE RESULTS (ANSWER YES OR NO)

Short Form: 38. DAMAGE DIMENSIONS (Y OR N)

If damage dimensions are known, this question should be answered "yes." If only partial information is available, a "yes" response should also be given.

QUESTIONS 39 AND 45: Side Damage Width

Long Form: 39. ENTER WIDTH OF DAMAGED AREA ALONG SIDE OF VEHICLE #1
NOTE: NASS INVESTIGATORS SHOULD REMEMBER THE PROTOCOL FOR INCLUDING INDUCED DAMAGE. THESE RULES REQUIRE THE INCLUSION OF BOTH DIRECT CONTACT AND INDUCED DAMAGE IN THE WIDTH (L) ENTERED INTO THE CRASH3 PROGRAM
FORM: L1 (INCHES)

45. ENTER WIDTH OF DAMAGED AREA ALONG SIDE OF VEHICLE #2
NOTE: NASS INVESTIGATORS SHOULD REMEMBER THE PROTOCOL FOR INCLUDING INDUCED DAMAGE. THESE RULES REQUIRE THE INCLUSION OF BOTH DIRECT CONTACT AND INDUCED DAMAGE IN THE WIDTH (L) ENTERED INTO THE CRASH3 PROGRAM
FORM: L2 (INCHES)

Short Form: 39. SIDE DAMAGE WIDTH #1

45. SIDE DAMAGE WIDTH #2

Enter the width, in inches, of the crush region. The default entry is a value assigned by the vehicle damage index code. Figure 1.18 shows a typical application, the damaged area width is the dimension L.

QUESTIONS 40 AND 46: Side Damage Depth Profile

Long Form: 40. ENTER A PROFILE OF THE EXTENT OF DAMAGE FOR VEHICLE #1
NOTE: AT TWO, FOUR, OR SIX POINTS ALONG THE WIDTH OF THE DENT MEASURE THE DEPTH OF THE DAMAGE FROM THE ORIGINAL SIDE DIMENSIONS (ENTRY SEQUENCE IS FROM REAR TO FRONT OF VEHICLE)
FORM: C1 C2 C3 C4 C5 C6 (INCHES)

46. ENTER A PROFILE OF THE EXTENT OF DAMAGE FOR VEHICLE #2
NOTE: AT TWO, FOUR, OR SIX POINTS ALONG THE WIDTH OF THE DENT MEASURE THE DEPTH OF THE DAMAGE FROM THE ORIGINAL SIDE DIMENSIONS (ENTRY SEQUENCE IS FROM REAR TO FRONT OF VEHICLE)
FORM: C1 C2 C3 C4 C5 C6 (INCHES)

Short Form: 40. SIDE DAMAGE DEPTH #1

46. SIDE DAMAGE DEPTH #2

Enter either a two, four, or six-point depth profile. Each entered depth point should be equally spaced along the width of the damaged area. Negative crush depths are not accepted. The desired measurement is the deflection, in inches, toward the vehicle interior from the original, undeformed vehicle surface. The default

value assigned for this question is a profile generated from the entered vehicle damage index. Figure 1.18 shows a typical application; the depth profile measurements in this example are the dimensions C1, C2, C3, C4, C5, and C6.

QUESTIONS 41 AND 47: Side Reference Point

Long Form: 41. ENTER DISTANCE ALONG VEHICLE #1 AXIS BETWEEN THE C.G. AND THE MIDDLE OF THE DAMAGED REGION
NOTE: IF THIS DISTANCE RUNS OFF TO THE REAR OF THE VEHICLE ENTER IT AS A NEGATIVE NUMBER
FORM: D1 (INCHES)

47. ENTER DISTANCE ALONG VEHICLE #2 AXIS BETWEEN THE C.G. AND THE MIDDLE OF THE DAMAGED REGION
NOTE: IF THIS DISTANCE RUNS OFF TO THE REAR OF THE VEHICLE ENTER IT AS A NEGATIVE NUMBER
FORM: D2 (INCHES)

Short Form: 41. SIDE DAMAGE MIDPOINT OFFSET #1

47. SIDE DAMAGE MIDPOINT OFFSET #2

Enter the distance from the center of the damaged region to the vehicle c.g., measured in inches along the long axis of the vehicle (as opposed to attempting to measure the direct distance from the damage width midpoint to the c.g., which is incorrect). If the center of the side damaged region is forward of the c.g., enter the distance as a positive quantity. If the center is aft of the c.g., enter the distance as a negative quantity. Figure 1.18 shows a typical application; the damage midpoint-to-c.g. distance is the

dimension D. The default value for this question is a distance generated on the basis of the collision deformation classification.

Calculations within the CRASH3 program shift the reference point to coincide with the centroid of damage. This adjustment is reflected in the printout value of D'. The user-entered value (D) is also printed out.

QUESTIONS 42 AND 48: End Damage Width

Long Form: 42. ENTER WIDTH OF DAMAGED AREA ALONG END OF VEHICLE #1
NOTE: INVESTIGATOR SHOULD REMEMBER THE PROTOCOL FOR INCLUSION OF BOTH DIRECT CONTACT AND INDUCED DAMAGE IN THE WIDTH (L) ENTERED INTO THE CRASH3 PROGRAM
FORM: L1 (INCHES)

48. ENTER WIDTH OF DAMAGED AREA ALONG END OF VEHICLE #2
NOTE: INVESTIGATOR SHOULD REMEMBER THE PROTOCOL FOR INCLUSION OF'BOTH DIRECT CONTACT AND INDUCED DAMAGE IN THE WIDTH (L) ENTERED INTO THE CRASH3 PROGRAM
FORM: L2 (INCHES)

Short Form: 42. END DAMAGE WIDTH #1

48. END DAMAGE WIDTH #2

Enter the width in inches of the crushed area. The default entry is a value assigned by the previously entered CDC. Figure 1.18 shows a typical application; the damaged area width is the dimension L.

QUESTIONS 43 AND 49: End Damage Depth Profile

Long Form: 43. ENTER A PROFILE ON THE EXTENT OF DAMAGE FOR VEHICLE #1
NOTE: AT TWO, FOUR, OR SIX POINTS ALONG THE WIDTH OF THE DENT MEASURE THE DEPTH OF THE DAMAGE FROM THE ORIGINAL END DIMENSIONS (ENTRY SEQUENCE IS FROM DRIVER TO PASSENGER SIDE)
FORM: C1 C2 C3 C4 C5 C6 (INCHES)

49. ENTER A PROFILE ON THE EXTENT OF DAMAGE FOR VEHICLE #2
NOTE: AT TWO, FOUR, OR SIX POINTS ALONG THE WIDTH OF THE DENT MEASURE THE DEPTH OF THE DAMAGE FROM THE ORIGINAL END DIMENSIONS (ENTRY SEQUENCE IS FROM DRIVER TO PASSENGER SIDE)
FORM: C1 C2 C3 C4 C5 C6 (INCHES)

Short Form: 43. END DAMAGE WIDTH #1

49. END DAMAGE WIDTH #2

Enter either a two, four, or six-point depth profile. Each entered depth point should be equally spaced along the width of the damaged area. Negative crush depths are not accepted. The desired measurement is the deflection, in inches, toward the vehicle interior from the original, undeformed vehicle surface. The default

value assigned for this question is a profile generated from the entered vehicle damage index. Figure 1.18 shows a typical application; the depth profile measurements in this example are the dimensions C1, C2, C3, C4, C5, and C6.

QUESTIONS 44 AND 50: End Reference Point

Long Form: 44. ENTER DISTANCE ALONG VEHICLE #1
AXIS BETWEEN THE C.G. AND THE
MIDDLE OF THE DAMAGED REGION
NOTE: IF THIS DISTANCE RUNS OFF
TOWARDS THE DRIVER SIDE
ENTER IT AS A NEGATIVE
NUMBER
FORM: D2 (INCHES)

50. ENTER DISTANCE ALONG VEHICLE #2
AXIS BETWEEN THE C.G. AND THE
MIDDLE OF THE DAMAGED REGION
NOTE: IF THIS DISTANCE RUNS OFF
TOWARDS THE DRIVER SIDE
ENTER IT AS A NEGATIVE
NUMBER
FORM: D2 (INCHES)

Short Form: 44. END DAMAGE MIDPOINT OFFSET #1

50. END DAMAGE MIDPOINT OFFSET #2

Enter the distance from the center of the damaged region to the vehicle c.g., measured in inches along the right-to-left axis of the vehicle. Do not measure a direct distance from the damage midpoint straight to the vehicle c.g.; this is incorrect. If the center of the end damaged region is on the passenger side of the long axis, enter the measurement as positive. If the center of the end damaged region is on the driver side, enter the measurement as negative. The default value is generated on the basis of the previously

entered vehicle damage index. Figure 1.18 shows a typical application: the damage midpoint-to-c.g. measurement in the dimension D.

Calculations within the CRASH3 program shift the reference point to coincide with the centroid of the damage. This adjustment is reflected in the printout value of D'. The user-entered value (D) is also printed out.

QUESTION *: Save Input

```
* DO YOU WANT TO SAVE INPUT---
  (FOR A RERUN OR FOR RUNNING THE GRAPHICS
  PROGRAM)

  ANSWER (Y OR N):
  ENTER FILE NAME FOR SAVING INPUT DATA (CRASH)---
  XXXXXXXX
```

If the user wishes to rerun a particular case again or the user intends to use the Graphics Program (CRGRAF), the user must save the input in a disk file. The file name can be up to eight characters long (no special characters), and an optional drive letter (with a colon after the drive letter) can precede the name. The extension is always .GRF. An example could be SWRI5290.GRF: the ".GRF" is added automatically and all eight characters need not be used. After entering the file name, the program will return to the first CRASH3 menu screen.

NOTICE

THE CRASH GRAPHICS PROGRAM (CRGRAF) IS BEING VALIDATED. ITS DISTRIBUTION HAS BEEN DELAYED UNTIL THE IN-HOUSE VALIDATION HAS BEEN COMPLETED

1.5 CRASH GRAPHICS PROGRAM

1.5.1 Introduction

In addition to the portability and convenience offered by the use of the microcomputer version of the CRASH3 program, it also supports a useful graphics program called CRGRAF. The CRGRAF graphics program utilizes Marquard's method of estimating the post impact trajectory using scene data. This method provides a faster means of estimating the post impact trajectory than is available using the trajectory analysis portion of the CRASH program itself. Microcomputer users should always use the CRGRAF program in lieu of the CRASH3 trajectory analysis.

When running the microcomputer version of CRASH3, the user has the option of saving his input data for later use, this data file is also used as the input file for the CRGRAF program. The user is presumed to have a basic knowledge of using DOS type microcomputers therefore the details on installing the graphics program have been relegated to Section 3.3.3 in the Programmer's Guide.

Like most graphics programs, the CRGRAF program is highly constrained by the available computer hardware. At this time CRGRAF can only be used with graphics boards which are compatible with an IBM color-graphics board and a suitable graphics monitor. Other hardware options will certainly become available in the near future. Users must satisfy themselves that the hardware configuration operating at their site is compatible with their version of CRGRAF. A graphics hardware problem will typically manifest itself by printing a blank screen when the program switches into the graphics mode and attempts to plot the trajectory.

The details of Marquard's method will not be discussed in this manual. The user is referred to other references for the analytical details of the method.

The user should also note that the graphics program CRGRAF cannot be used for damage only CRASH runs. The user must have entered scene data (Questions 6 through 31) in the CRASH3 program to use the graphics program.

1.5.2 Starting the Program

The CRASH3 program must be run before the CRGRAF graphics program and the user must save the input data by responding with a YES to the final question in CRASH3. File handling is different on the several microcomputer versions of the CRASH3 and CRGRAF programs. For those using the NASS version of the program, the input data is automatically stored in a file named CRASH.GRF when the user responds YES to the save input question. The CRGRAF program then will automatically read the CRASH.GRF file when the graphics program is started. Care should be taken to ensure that files are not overwritten since only one default name is used.

For users not using the NASS version, the CRASH3 program will prompt the user for a file name. For example if the user instructs the program to save the data in a file with the name TEST, CRASH3 will write the data to a file named TEST.GRF. Note that the extension ".GRF" is added automatically to the user entered name. When running the CRGRAF program the user then must enter this same name, without the ".GRF" extension, in order to view the vehicle trajectories.

Starting the program is accomplished simply by typing the keyword CRGRAF at the DOS system prompt. When the prompt

ENTER RETURN TO CONTINUE (? FOR MORE INFO)---

appears, the user may either view an information screen by entering a <?> or continue by striking the <ENTER> key.

Next, the program will request file information. If the non-NASS version is being used, the message,

ENTER GRAPHIC INPUT FILE NAME (CRASH) ----------

will appear on the terminal screen. The user should respond with the file name without the .GRF extension. For example, if the user had saved their input in the file TEST.GRF, they would respond to this question by typing "TEST". The program will automatically choose the file CRASH.GRF for NASS version users.

1.5.3 Trajectory Calculations

Once the input file has been read, the program will begin its trajectory calculations. The Marquard method is iterative in nature; the results will usually improve each time the trajectory calculations are performed. Example 1 from the next section will be used to illustrate the use of CRGRAF.

Figures 1.20 and 1.21 show the initial trajectory calculations for Vehicles 1 and 2, respectively, for Example 1. The program calculates the position and velocity for a number of intermediate points on the vehicle's path. The results of the first iteration are not very good as shown at the bottoms of Figures 1.20 and 1.21. Vehicle 1 in Figure 1.20 should have come to rest at X = 21.5 feet, Y = 16.5 feet with a heading angle of 39 degrees. The first iteration, however, calculated a final rest position of X = 23.2, Y = 16.2 and a heading angle of 10.3 degrees. At this time the user should elect to perform another trajectory calculation in order to improve the quality of the trajectory estimate by responding with a Y for yes, to the following prompt:

```
+-----------------------------------------+
: THE MARQUARD ESTIMATES OF THE INITIAL   :
: VELOCITIES FROM THE SCENE DATA FOR      :
: VEHICLE #  1                            :
+-----------------------------------------+

 FORWARD VEL. =       11.39 M.P.H.
 LATERAL VEL. =       18.14 M.P.H.
 RESULTANT V. =       21.42 M.P.H.
 ANGULAR VEL. =         .11 REV./SEC

ENTER RETURN TO CONTINUE---

 TRAJECTORY CALCULATIONS HAVE STARTED

      TRAJECTORY TABLE
      ----------------
```

X (FT)	Y (FT)	HD (DEG)	VEL F/S	VEL REV/S
.000	3.000	.000	31.412	.107
1.072	4.664	2.398	29.484	.098
2.117	6.195	4.580	27.569	.089
3.140	7.591	6.543	25.695	.079
4.142	8.852	8.289	23.891	.070
5.129	9.977	9.820	22.177	.061
6.105	10.965	11.134	20.570	.052
7.071	11.817	12.232	19.095	.042
8.031	12.531	13.113	17.776	.033
8.987	13.109	13.778	16.646	.024
9.941	13.550	14.225	15.741	.014
10.891	13.864	14.376	15.086	-.001
11.824	14.102	14.246	14.545	-.009
12.727	14.313	14.017	14.010	-.011
13.599	14.507	13.755	13.475	-.012
14.439	14.687	13.481	12.938	-.012
15.245	14.855	13.209	12.402	-.012
16.018	15.012	12.943	11.865	-.011
16.757	15.158	12.685	11.328	-.011
17.463	15.294	12.438	10.791	-.010
18.135	15.420	12.201	10.254	-.010
18.774	15.537	11.974	9.717	-.009
19.378	15.646	11.759	9.180	-.009
19.949	15.745	11.555	8.642	-.008
20.486	15.837	11.363	8.105	-.008
20.988	15.921	11.182	7.567	-.007
21.456	15.998	11.013	7.029	-.007
21.890	16.068	10.856	6.491	-.006
22.289	16.131	10.711	5.953	-.006
22.654	16.187	10.580	5.415	-.006
22.985	16.236	10.475	4.875	-.007
23.282	16.278	10.394	4.337	-.005

```
GOALS  X,Y,P        21.500       16.500       39.000
FOUND  X,Y,P        23.200       16.200       10.300

ENTER RETURN TO CONTINUE---
 THE INITIAL VALUES USED IN THIS TRAJECTORY WERE:
     200.400      319.200         .670

DO YOU WANT TO REPEAT TRAJECTORY CALCULATION (Y/N)? Y

 THE INITIAL VALUES FOR U, V, PSID FOR THE NEXT RUN ARE:
     181.710      318.630         .880

ENTER RETURN TO CONTINUE---
```

FIGURE 1.20 FIRST ITERATION TRAJECTORY TABLE, VEHICLE 1

```
+-----------------------------------------+
: THE MARQUARD ESTIMATES OF THE INITIAL   :
: VELOCITIES FROM THE SCENE DATA FOR      :
: VEHICLE #  2                            :
+-----------------------------------------+

 FORWARD VEL. =      -18.42 M.P.H.
 LATERAL VEL. =        8.79 M.P.H.
 RESULTANT V. =       20.41 M.P.H.
 ANGULAR VEL. =        -.19 REV./SEC

ENTER RETURN TO CONTINUE---
 TRAJECTORY CALCULATIONS HAVE STARTED
```

TRAJECTORY TABLE

X (FT)	Y (FT)	HD (DEG)	VEL F/S	VEL REV/S
10.000	.000	90.000	29.933	-.194
9.169	-1.728	85.971	29.076	-.150
8.353	-3.402	82.973	28.215	-.106
7.554	-5.022	81.015	27.349	-.061
6.774	-6.588	80.095	26.479	-.017
6.016	-8.101	80.193	25.607	.026
5.282	-9.563	81.276	24.731	.067
4.575	-10.975	83.299	23.852	.106
3.898	-12.338	86.204	22.966	.142
3.256	-13.653	89.920'	22.069	.175
2.650	-14.921	94.369	21.153	.205
2.087	-16.141	99.467	20.209	.231
1.568	-17.313	105.128	19.224	.253
1.096	-18.434	111.266	18.189	.271
.675	-19.501	117.798	17.093	.286
.305	-20.509	124.642	15.928	.298
-.013	-21.452	131.726	14.687	.307
-.281	-22.324	138.979	13.367	.313
-.502	-23.118	146.339	11.966	.316
-.679	-23.826	153.751	10.480	.317
-.817	-24.441	161.166	8.924	.316
-.930	-24.972	168.364	8.029	.290
-1.032	-25.446	174.910	7.130	.261
-1.124	-25.862	180.736	6.224	.229
-1.211	-26.221	185.780	5.322	.195
-1.292	-26.532	189.862	4.349	.161
-1.371	-26.778	193.116	3.383	.125
-1.448	-26.957	195.503	2.420	.087
-1.521	-27.068	196.951	1.507	.045
-1.581	-27.101	197.455	.779	.010

```
GOALS  X,Y,P       32.000      10.500      20.000
FOUND  X,Y,P       -1.500     -27.100     197.400

ENTER RETURN TO CONTINUE---
 THE INITIAL VALUES USED IN THIS TRAJECTORY WERE:
    -324.100      154.700       -1.210

DO YOU WANT TO REPEAT TRAJECTORY CALCULATION (Y/N)? Y

 THE INITIAL VALUES FOR U, V, PSID FOR THE NEXT RUN ARE:
     128.340     -300.340       -2.270

ENTER RETURN TO CONTINUE---
```

FIGURE 1.21 FIRST ITERATION TRAJECTORY TABLE, VEHICLE 2

DO YOU WANT TO REPEAT TRAJECTORY CALCULATION
(Y/N)?

CRGRAF will then display the new initial conditions and will begin a new set of trajectory calculations when the user is ready.

It is vitally important for the user to continue iterating until a fairly good match between the FOUND and GOAL rows in the trajectory table is obtained. If the information is plotted after only one or two iterations, it will very likely be completely false! Unfortunately, obtaining a good trajectory match may take a large number of iterations. For Vehicle 1 in Example 1, twelve trajectory iterations were required to obtain a good match between the GOAL and FOUND rows. Typically the X and Y positions will converge to the correct values within three or four iterations. The heading angle, however, converges much more slowly. In Example 1 the X-Y position converged in three iterations but the heading angle required another nine iterations as shown by the trajectory table in Figure 1.22. Figure 1.23 shows the amount of error for the X and Y positions and the heading angle of Vehicle 1 as a function of the number of iterations performed.

TRAJECTORY CALCULATIONS HAVE STARTED

TRAJECTORY TABLE

X (FT)	Y (FT)	HD (DEG)	VEL F/S	VEL REV/S
.000	3.000	.000	21.706	.444
1.142	3.791	9.742	21.049	.388
2.256	4.548	18.147	20.398	.330
3.345	5.268	25.200	19.785	.272
4.415	5.948	30.899	19.216	.215
5.469	6.585	35.244	18.694	.157
6.509	7.181	38.258	18.187	.104
7.517	7.762	40.281	17.573	.072
8.468	8.355	41.686	16.917	.048
9.358	8.964	42.559	16.270	.026
10.185	9.590	42.924	15.655	.005
10.956	10.225	42.871	15.085	-.008
11.687	10.851	42.613	14.541	-.012
12.391	11.456	42.310	14.003	-.013
13.069	12.036	42.008	13.466	-.013
13.724	12.591	41.716	12.930	-.012
14.354	13.119	41.435	12.393	-.012
14.961	13.623	41.166	11.856	-.011
15.543	14.101	40.907	11.320	-.011
16.100	14.554	40.659	10.783	-.010
16.633	14.983	40.422	10.245	-.010
17.139	15.387	40.196	9.708	-.009
17.620	15.768	39.981	9.171	-.009
18.075	16.126	39.778	8.633	-.008
18.504	16.460	39.585	8.096	-.008
18.907	16.771	39.405	7.558	-.007
19.282	17.060	39.236	7.020	-.007
19.631	17.326	39.079	6.482	-.006
19.953	17.570	38.934	5.944	-.006
20.247	17.792	38.804	5.406	-.006
20.515	17.992	38.699	4.867	-.007
20.757	18.168	38.619	4.328	-.005

GOALS	X,Y,P	21.500	16.500	39.000
FOUND	X,Y,P	20.700	18.100	38.600

ENTER RETURN TO CONTINUE---
THE INITIAL VALUES USED IN THIS TRAJECTORY WERE:
213.400 149.200 2.770

DO YOU WANT TO REPEAT TRAJECTORY CALCULATION (Y/N)?

FIGURE 1.22 TWELFTH ITERATION TRAJECTORY TABLE, VEHICLE 1

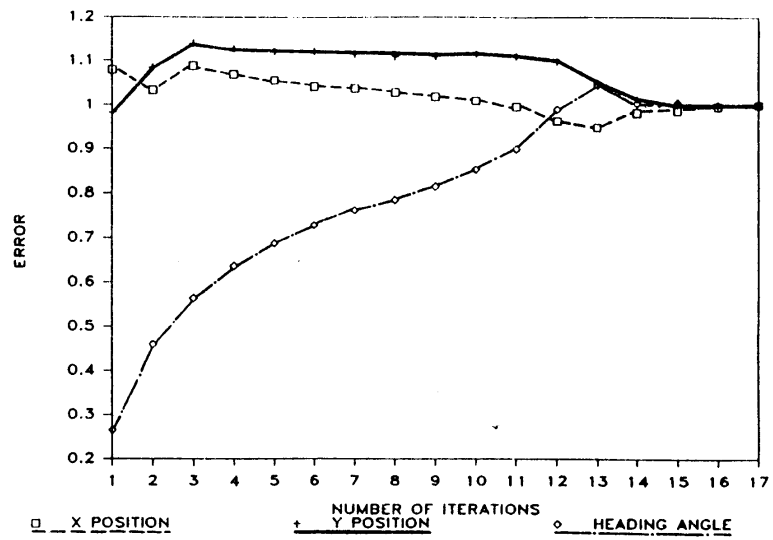

FIGURE 1.23 CONVERGENCE OF MARQUARD TRAJECTORY ESTIMATES, VEHICLE 1, EXAMPLE 1

In most cases the Marquard method will converge to the correct values if a sufficient number of iterations are performed. Figure 1.24 shows an example of a case where even after thirteen iterations the calculated heading angle is still much different from the goal heading angle. In this particular case, the author performed four additional iterations, seventeen in total, which did not improve the heading angle at all. The Marquard method, though convergent, may converge very very slowly in particular cases such as this example.

When the user determines that the results of the trajectory calculations match sufficiently well, he may continue by answering NO to the question,

DO YOU WANT TO REPEAT TRAJECTORY CALCULATION (Y/N)?

A table containing the final results of the trajectory calculations will then be printed for Vehicle 1. The final trajectory table for Vehicle 1 in Example 1 is shown in Figure 1.25. After the final table is displayed the user may have the final trajectory table sent to the printer or he may continue without printing the data. The program will then perform the same sequence of

TRAJECTORY TABLE

X (FT)	Y (FT)	HD (DEG)	VEL F/S	VEL REV/S
10.000	.000	90.000	24.992	.000
11.271	.954	89.764	23.897	-.020
12.478	1.873	89.059	22.806	-.040
13.623	2.759	87.881	21.724	-.060
14.705	3.611	86.224	20.657	-.081
15.725	4.430	84.074	19.608	-.103
16.684	5.219	81.412	18.582	-.125
17.581	5.977	78.215	17.583	-.148
18.419	6.707	74.458	16.614	-.173
19.198	7.410	70.108	15.680	-.199
19.924	8.086	65.211	14.914	-.215
20.635	8.720	60.203	14.409	-.210
21.356	9.295	55.418	13.956	-.199
22.087	9.805	50.906	13.497	-.187
22.826	10.249	46.658	13.026	-.176
23.566	10.626	42.645	12.542	-.167
24.302	10.938	38.834	12.046	-.159
25.027	11.188	35.191	11.541	-.152
25.735	11.378	31.691	11.030	-.147
26.422	11.514	28.313	10.515	-.142
27.083	11.598	25.044	9.998	-.138
27.715	11.636	21.873	9.481	-.133
28.314	11.631	18.797	8.965	-.129
28.879	11.589	15.813	8.449	-.126
29.406	11.515	12.923	7.935	-.122
29.894	11.414	10.129	7.423	-.117
30.343	11.290	7.436	6.911	-.113
30.752	11.148	4.852	6.399	-.108
31.121	10.994	2.384	5.883	-.103
31.449	10.831	.052	5.350	-.100
31.739	10.665	-2.135	4.838	-.093
31.990	10.500	-4.171	4.327	-.087

GOALS	X,Y,P	32.000	10.500	20.000
FOUND	X,Y,P	31.900	10.400	-4.100

ENTER RETURN TO CONTINUE---
THE INITIAL VALUES USED IN THIS TRAJECTORY WERE:
179.300 -240.300 .000

DO YOU WANT TO REPEAT TRAJECTORY CALCULATION (Y/N)?
THE INITIAL VALUES USED IN THIS TRAJECTORY WERE:
179.200 -240.300 .000

FIGURE 1.24 THIRTEENTH ITERATION TRAJECTORY TABLE, VEHICLE 2

FINAL TRAJECTORY TABLE FOR VEHICLE # 1

X (FT)	Y (FT)	YAW (DEG)
.00	3.00	.00
1.14	3.79	9.74
2.26	4.55	18.15
3.35	5.27	25.20
4.42	5.95	30.90
5.47	6.59	35.24
6.51	7.18	38.26
7.52	7.76	40.28
8.47	8.35	41.69
9.36	8.96	42.56
10.18	9.59	42.92
10.96	10.22	42.87
11.69	10.85	42.61
12.39	11.46	42.31
13.07	12.04	42.01
13.72	12.59	41.72
14.35	13.12	41.44
14.96	13.62	41.17
15.54	14.10	40.91
16.10	14.55	40.66
16.63	14.98	40.42
17.14	15.39	40.20
17.62	15.77	39.98
18.08	16.13	39.78
18.50	16.46	39.59
18.91	16.77	39.40
19.28	17.06	39.24
19.63	17.33	39.08
19.95	17.57	38.93
20.25	17.79	38.80
20.52	17.99	38.70
20.76	18.17	38.62

ACTUAL REST POSITION:

21.50	16.50	39.00

ENTER RETURN TO CONTINUE---

FIGURE 1.25 FINAL TRAJECTORY TABLE, VEHICLE 1

steps for Vehicle 2. The final trajectory table for Vehicle 2 is shown in Figure 1.26.

1.5.4 Graphics Options

After completing the trajectory calculations, the program will display the following menu:

```
1. UNINTERRUPTED SEQUENCE ( YES)
2. VEHICLE MAGNIFIED      (  NO)
3. MULTIPLE EXPOSURE      (  NO)
4. SHOW TRAJECTORY        ( YES)
5. SHOW DAMAGE            (  NO)

6. BEGIN DISPLAY

ENTER OPTION NUMBER---
```

The above settings are the default settings set by the CRGRAF program. If the user desires a different combination of options, he may change these settings by entering the number of the option that he would like changed. For example, if the user wants to see the damage patterns, he would enter the numeral 5. The menu would then appear as follows:

FORWARD VELOCITY = 10.18 MPH
LATERAL VELOCITY = -13.65 MPH
RESULTANT VEL. = 17.03 MPH
ANGULAR VELOCITY = .00 REV/SEC

FINAL TRAJECTORY TABLE:

X (FT.)	Y (FT.)	P (DEG.)
10.00	.00	90.00
11.27	.95	89.76
12.48	1.87	89.06
13.62	2.76	87.88
14.71	3.61	86.23
15.73	4.43	84.08
16.68	5.22	81.42
17.58	5.97	78.22
18.42	6.70	74.47
19.20	7.41	70.12
19.92	8.08	65.22
20.63	8.71	60.22
21.35	9.29	55.43
22.09	9.80	50.92
22.82	10.24	46.67
23.56	10.62	42.66
24.30	10.93	38.85
25.02	11.18	35.21
25.73	11.37	31.71
26.42	11.51	28.33
27.08	11.59	25.06
27.71	11.63	21.89
28.31	11.62	18.81
28.87	11.58	15.83
29.40	11.51	12.94
29.89	11.41	10.15
30.34	11.28	7.46
30.74	11.14	4.87
31.11	10.99	2.41
31.44	10.83	.08
31.73	10.66	-2.11
31.98	10.49	-4.14

FIGURE 1.26 FINAL TRAJECTORY TABLE, VEHICLE 2

```
1. UNINTERRUPTED SEQUENCE ( YES)
2. VEHICLE MAGNIFIED      (  NO)
3. MULTIPLE EXPOSURE      (  NO)
4. SHOW TRAJECTORY        ( YES)
5. SHOW DAMAGE            ( YES)

6. BEGIN DISPLAY
```

Each of the available options will be discussed in the following paragraphs.

When a picture is displayed, the user can press the ENTER <RETURN> key to proceed to the next display or press <P> to get a copy of the graphics on the printer.

Uninterrupted sequence

The default option of YES will produce the sequence of pictures with no interruptions along the trajectory. If NO is chosen, the user will be asked for the number of intermediate points along the trajectory he wishes to view. The user can go to the next picture by striking the <ENTER> key. Figure 1.27 shows the graphical representation of the trajectory of the vehicles in Example 1.

Magnified Vehicles

Selecting YES for this option will cause the vehicles to be plotted at twice their normal

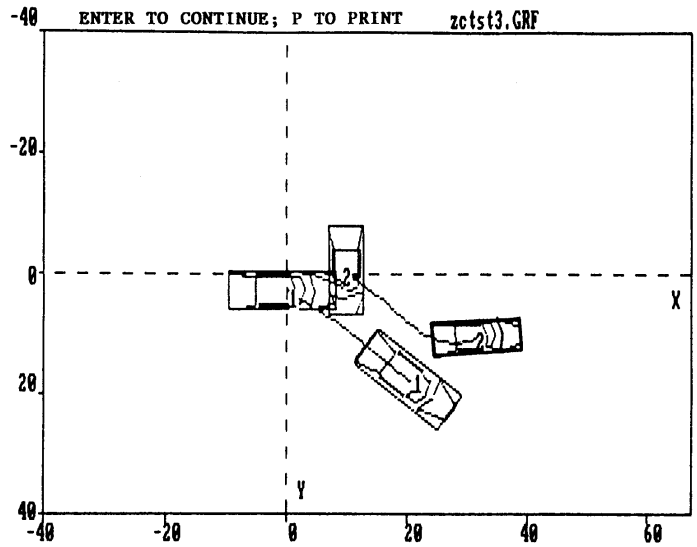

FIGURE 1.27 TRAJECTORY OPTION (OPTION 4 = YES)

size. This option is useful for some situations where the vehicles traverse large distances. In most situations, however, using enlarged vehicles will only clutter the plot and obscure the vehicle trajectories. For this reason the default setting is NO.

Multiple Exposure

The default setting for this option is also NO because using it tends to clutter the screen and obscure the vehicle trajectories. It is useful, however, to view this option on the terminal screen since the vehicles are printed in psuedo-real time on the screen allowing the user to effectively watch the collision as it occurs. Insight into the behavior of the vehicles and the likelihood of an impact resulting in such a path can be gained by selecting this option for viewing on the terminal screen. Figure 1.28 shows the multiple exposure plot of Example 1.

Show Trajectory

In the unlikely event that the user does not desire to view the trajectory he may select NO for this option. The default setting is YES.

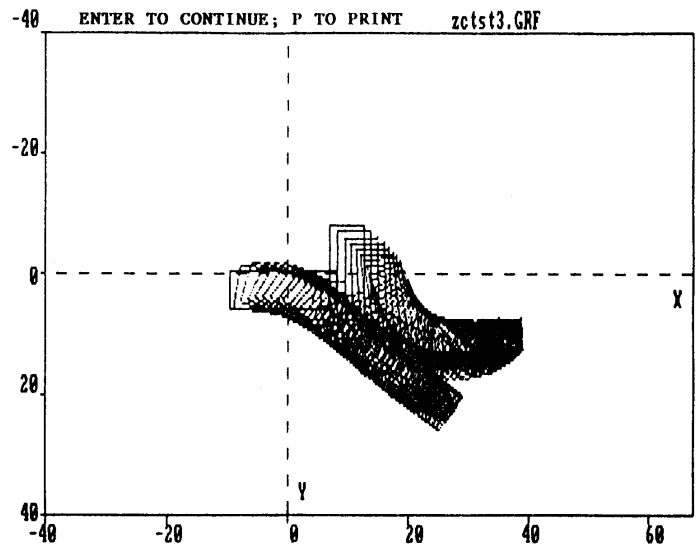

FIGURE 1.28 MULTIPLE EXPOSURE OPTION, (OPTION 3 = YES)

Show Damage

Selecting YES will cause the CRGRAF program to show a pictorial representation of the damage based on the damage dimensions entered in the CRASH program. Figure 1.29 shows the damage plot for the vehicles of Example 1. The default is NO. This option cannot be used if there is no trajectory data; CRGRAF cannot plot information from damage only CRASH runs.

End Options

When option 6 is selected the computer will begin to plot the various figures which the user has specified in the option menu.

After all the plots have been displayed the user is presented with the following prompt:

DO YOU WANT TO RUN GRAPHICS AGAIN (Y/N)?

If yes is selected, the user is asked:

READ NEW INPUT FILE (Y/N)?

and he may start the program again.

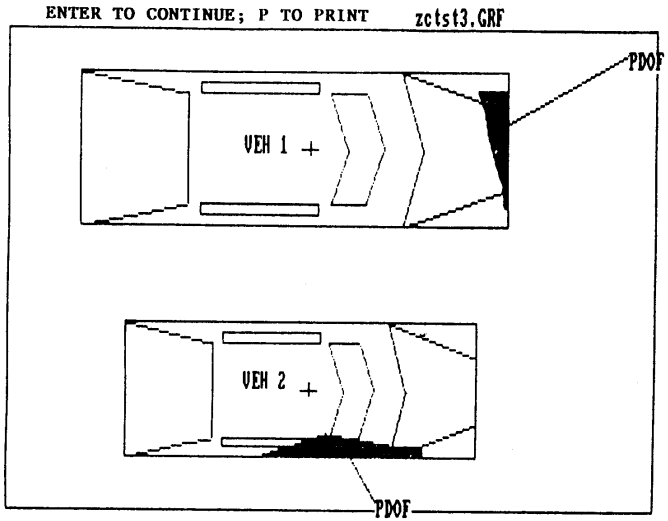

FIGURE 1.29 ILLUSTRATION OF DAMAGE OPTION, (OPTION 5 = YES)

1.6 DIFFERENCES WITH THE MAINFRAME VERSION

There are very few differences between the mainframe and micro versions of the CRASH3 program. Different methods of handling input and output data account for most of the differences between the two versions; the actual methods used to analyze accident data are identical. In fact, the microversion was developed by transferring the mainframe computer source code to the microcomputer, making some small changes to account for the different file handling methods, and then recompiling the code on the microcomputer; the bulk of the program was never altered.

The following sections discuss only the questions where the user will notice differences between the mainframe and the microcomputer versions. The format will be similar to the one used in Section 1.4. Users who will only use the microcomputer version should not be concerned with the material in this section and may skip directly to the sample program runs in Section 1.7.

QUESTION *: Options

* ENTER TYPE OF CRASH RUN?
(COMPLETE, ABBREVIATED, RERUN, PRINT, SMAC, OR END)

SELECT DESIRED TYPE OF RUN. FIRST LETTER IS SUFFICIENT, I.E., "C" FOR COMPLETE

COMPLETE	- LONG FORM QUESTIONS AND FULL PRINTOUT
ABBREVIATED	- SHORT QUESTIONS AND SHORT SUMMARY PRINTOUT
RERUN	- EXECUTE THE CRASH PROGRAM WITH UP TO TWELVE RESPONSES ALTERED BY THE USER. ALL OTHER DATA REMAINS THE SAME AS THE PREVIOUS RUN. QUESTIONS AND PRINTOUT WILL BE ABBREVIATED.
PRINT	- COMPLETE PRINTOUT OF PREVIOUS CRASH RUN.
SMAC	- PUNCH AN INPUT DECK FOR THE SMAC PROGRAM BASED ON THE PREVIOUS RUN
END	- TERMINATE THE CRASH PROGRAM

If "C" (complete) is selected, the following notice will be printed.

```
*****************************************************************************
*                                                                           *
*                                  CRASH                                    *
*                                                                           *
*          CALSPAN RECONSTRUCTION OF ACCIDENT SPEEDS ON THE HIGHWAY         *
*                                                                           *
*  NOTE:     ANSWER ALL QUESTIONS AS DIRECTED.                              *
*            TERMINATE ALL RESPONSES WITH A CARRIAGE RETURN.                *
*            RESPONSES MAY BE PLACED ANYWHERE ON A LINE.                    *
*            SEPARATE RESPONSES BY ONE OR MORE BLANKS.                      *
*            ENTER A ? TO GET THE COMPLETE VERSION OF A QUESTION.           *
*            ENTER A $ TO BACKSPACE TO THE PREVIOUS QUESTION.               *
*            ENTER A BLANK LINE TO GET THE PREDEFINED DEFAULT VALUE.        *
*            IF YOU MAKE A MISTAKE:  (1) BEFORE HITTING CARRIAGE RETURN,    *
*            TYPE SOME GARBAGE THAT YOU KNOW THE COMPUTER WILL REJECT -     *
*            THE COMPUTER WILL COMPLAIN AND RESUBMIT THE QUESTION.          *
*            (2) AFTER HITTING CARRIAGE RETURN YOU'LL HAVE TO USE THE       *
*            BACKSPACE COMMAND ON THE NEXT QUESTION.                        *
*                                                                           *
*            COORDINATE SYSTEM CONVENTIONS:  + Y-AXIS RUNS TO THE RIGHT     *
*            OF THE + X-AXIS.  POSITIVE HEADING ANGLES ROTATE CLOCKWISE.    *
*                                                                           *
*****************************************************************************

? ENTER RETURN TO CONTINUE:
```

As in the microcomputer version, all input elements should be entered in capital letters. The mainframe version has the same six options as the microcomputer version but the meaning attached to each option is somewhat different. The six options are described below.

- COMPLETE

  Using the COMPLETE option will clear all data from the previous run and present all the questions with their full text. The full text questions are long and self-explanatory to aid those who are novices or infrequent users of the CRASH3 program. All users who are unfamiliar with the program should use the COMPLETE option.

- ABBREVIATED

  As a user becomes more familiar with the CRASH3 program, he will begin to find the COMPLETE option a little too time consuming. The ABBREVIATED option is functionally identical to the COMPLETE option with the exception that instead of using the long full text form of the questions, a short or abbreviated question is used. The short form of the question is intended to "jog" the memory of users more familiar with the questions CRASH3 asks. If a

user becomes confused while using the ABBREVIATED form he can always print the full long text form of the question by entering a "?" in response to any question.

° RERUN

Often a user will wish to make a series of runs on the same accident case changing only a few question responses items each time. In such a situation, it is tedious to reanswer all the questions in order to explore the effects of changing one response. 'The RERUN feature was included to simplify this procedure. Each CRASH3 question has a unique question number identified with it. The question numbers used in this manual and on the summary form shown in Section 1.3.4 all correspond to the question numbers used in the CRASH3 program itself. This question number is printed with both the long and short form of the question. When the RERUN option is selected, question responses from the previous run are saved and the user may select up to twelve questions to modify. When the RERUN option is selected the following prompt will appear:

QUESTION NUMBERS?

The user should then specify the questions for which he wishes to alter his response and terminate with a carriage return.

° PRINT

Since the RERUN and ABBREVIATED options only print a short summary of the CRASH3 output, the PRINT option can be used to print the complete output results to the terminal screen.

° SMAC

The results of a CRASH3 run may be used to generate a fourteen card input file for the SMAC program (Simulation Model of Automobile Collisions) using this option. The intention in providing this feature is to provide a convenience for SMAC users.

° END

This option terminates the CRASH3 program. It is good user etiquette to always use this option to exit the program rather than "crashing" or "hanging up" the mainframe.

QUESTIONS 15 AND 22: Presence of a Curved Trajectory

The long form of Question 15 has two different forms on the mainframe, depending on the point at which the vehicle stopped rotating. Question 13 asks the user if skidding ceased before the vehicle came to rest. If the user replied "YES" to question 13, Question 15 would be shown as follows.

Long Form:

15. WAS THE SPINOUT PATH OF VEHICLE 1 BETWEEN SEPARATION AND STOP OF ROTATION CURVED?
NOTE: TRY TO VISUALIZE THE PATH OF THE VEHICLE C.G. IF A PROMINENT ARC IS PRESENT, ANSWER AFFIRMATIVELY. (ANSWER YES OR NO)

If the vehicle came to rest before ceasing its skidding motion and the user had answered Question 13 as "NO", Question 15 would appear as follows:

Long Form:

```
15. WAS THE SPINOUT PATH OF VEHICLE 1
    BETWEEN SEPARATION AND REST
    CURVED?
    NOTE:  TRY TO VISUALIZE THE PATH
           OF THE VEHICLE C.G.
           IF A PROMINENT ARC IS
           PRESENT, ANSWER
           AFFIRMATIVELY.
           (ANSWER YES OR NO)
```

The microcomputer version combines these two forms as shown in the previous section. There is no change in the way the program handles the data: this was merely a change of question text.

The last question shown in Section 1.4.5 is not used in the mainframe version at all. On the mainframe, the user cannot save his output in an external file or recall for use at a later date. For this reason, the "Save Input" question does not appear on the mainframe.

1.7 SAMPLE RUNS

1.7.1 Introduction

The following section contains several sample runs to illustrate the proper use of the CRASH3 program. Each example is preceded by a short description of the accident and a summary sketch of the scene. The computer output is shown next to the CRASH3 summary form introduced in Section 1.3.4. In this way, the user can see where the information required to answer each question comes from.

The following examples use output from the microcomputer version of the CRASH3 program. Users of the mainframe version should notice only minor, mostly cosmetic differences between mainframe and micro CRASH runs.

Example 1 shows the effect of using less and less data. A complete run with full damage and trajectory information is shown first, followed by several runs with decreasing amounts of data, until the final run where all the available default values are used. Table 1.4 contains a summary of these five different runs.

1.7.2 Sample Run 1:

Title: ZCTST3

Description: This accident occurred at a 90° intersection and involved a collision between a 1985 Oldsmobile 98 (Vehicle 1) and a 1985 Oldsmobile Firenza (Vehicle 2). Vehicle 1 was northbound and Vehicle 2 was eastbound when the vehicles collided. The front of the Olds 98 struck the right front side of the Firenza. The vehicles rotated to final rest northeast of the point of impact, as shown in Figure 1.30. The computer output and summary form are shown in Figure 1.31, the CRGRAF final trajectory tables are shown in Figure 1.32, and the CRGRAF plots of the vehicle trajectory and damage are shown in Figure 1.33 and 1.34.

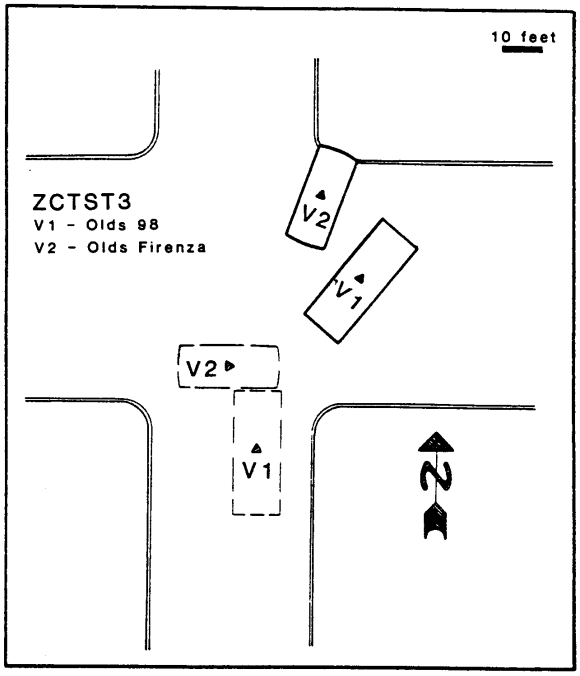

FIGURE 1.30 SCENE SKETCH, EXAMPLE 1

CRASH Program Summary

This form presents the CRASH Program summary information for traffic units numbered:

	Vehicle No.	Make	Model
First Vehicle	1	OLDS	98
Second Vehicle	2	OLDS	FIRENZA

TITLE: (80 Characters Maximum)

ZCTST3 85 OLDS 98/85 OLDS FIRENZA

12/17/85

2. VEHICLE CLASS WEIGHT?
   - Veh # 1 Class Weight: Compact 122 Cargo 0 Curb 2167 — 3 3 0 0 (4)
   - Veh # 2 Class Weight: 148 0 2412 — 2 5 6 0 (4)
3. Veh # 1 CDC PDOF 50 — 1 1 F D E W 2 / 0 2 0
4. Veh # 2 CDC PDOF 70 — 0 2 R Y E W 3 / 0 2 0 — 70
5. VEHICLE STIFFNESS?
   - Veh # 1 — 9
   - Veh # 2 — 4
6. KNOWLEDGE of REST and IMPACT POSITIONS?
   - ___ No – skip to 38. – Damage Dimensions
   - ✓ Yes:
7. REST
   - Veh # 1 X 2 1 . 5
     - Y 1 6 . 5
     - ψ 3 9 . _
   - Veh # 2 X 3 2 . _
     - Y 1 0 . 5
     - ψ 2 0 . _
8. IMPACT
   - Veh # 1 X 0 . _
     - Y 3 . _
     - ψ 0 . _
   - Veh # 2 X 1 0 . _
     - Y 0 . _
     - ψ 9 0 . _
9. Slip angles PRIOR to impact?
   - ✓ No – skip to 11.
   - ___ Yes
10. Slip angles
    - Veh # 1 — ___
    - Veh # 2 — ___
11. SUSTAINED CONTACT?
    - ✓ No
    - ___ Yes
12. SKIDDING of Vehicle One?
    - ___ No – skip to 15.
    - ✓ Yes:
13. Did SKIDDING stop prior to final rest?
    - ✓ No – skip to 15.
    - ___ Yes:
14. Location
    - X ___
    - Y ___
    - ψ ___
15. Was Vehicle One's PATH CURVED?
    - ✓ No – skip to 17.
    - ___ Yes:
16. Point on Path
    - X ___
    - Y ___
17. ROTATION DIRECTION of Vehicle One?
    - ___ None – skip to 19.
    - ✓ Clockwise: ?
    - ___ Counterclockwise:
18. More than 360 degrees?
    - ✓ No
    - ___ Yes
19. SKIDDING OF Vehicle Two?
    - ___ No – skip to 22.
    - ✓ Yes:
20. Did SKIDDING stop prior to final rest?
    - ✓ No – skip to 22.
    - ___ Yes:
21. Location
    - X ___
    - Y ___
    - ψ ___
22. Was Vehicle Two's PATH CURVED?
    - ✓ No – skip to 24.
    - ___ Yes:
23. Point on Path
    - X ___
    - Y ___
24. ROTATION DIRECTION of Vehicle Two?
    - ___ None – skip to 26.
    - ___ Clockwise:
    - ✓ Counterclockwise:
25. More than 360 degrees
    - ✓ No
    - ___ Yes
26. Tire-Ground FRICTION? 8

FIGURE 1.31 CRASH SUMMARY FORM, EXAMPLE 1

27. ROLLING RESISTANCE* [Option (1) or (2)]

(1) Proportion of Braking Each Wheel

28. ROLLING RESISTANCES for Individual Wheels — Veh # 1: RF .5; LF .5; RR .07; LR .07

29. ROLLING RESISTANCES for Individual Wheels — Veh # 2: RF 1.; LF 1.; RR .07; LR .07

OR

(2) Longitudinal Deceleration

30. Veh # 1 ___

31. Veh # 2 ___

32. TRAJECTORY SIMULATION*

✓ No – skip to 38.

___ Yes: Steer angles*

33. STEER ANGLES — Veh # 1: RF ___; LF ___; RR ___; LR ___

34. STEER ANGLES — Veh # 2: RF ___; LF ___; RR ___; LR ___

35. TERRAIN BOUNDARY*

___ No – skip to 38.

___ Yes: Boundary Points*

36. BOUNDARY POINTS — XBP1 ___; YBP1 ___; XBP2 ___; YBP2 ___

37. SECONDARY FRICTION COEFFICIENT* ___

38. ARE DAMAGE DIMENSIONS Known*

✓ No – PROGRAM COMPLETED*

___ Yes: Dimensions in Inches

39. Side damage
42. End damage — Veh # 1 L 70

40. Side damage
43. End damage — C_1 15; C_2 12; C_3 10; C_4 7; C_5 3; C_6 2

41. Side damage
44. End damage — Dt 0

45. Side damage
46. End damage — Veh # 2 L 95

46. Side damage
49. End damage — C_1 0; C_2 3; C_3 10; C_4 7; C_5 5; C_6 3

47. Side damage
50. End damage — 1 6 75

FIGURE 1.31 CRASH SUMMARY FORM, EXAMPLE 1
(Continued)

FINAL TRAJECTORY TABLE FOR VEHICLE # 1

X (FT)	Y (FT)	YAW (DEG)
.00	3.00	.00
1.26	3.62	9.20
2.49	4.20	17.25
3.69	4.75	23.85
4.88	5.26	29.09
6.04	5.73	32.99
7.17	6.18	35.91
8.25	6.65	38.25
9.26	7.15	40.08
10.21	7.67	41.45
11.08	8.22	42.37
11.90	8.78	42.83
12.65	9.37	42.85
13.34	9.95	42.60
14.01	10.52	42.30
14.65	11.07	42.00
15.27	11.59	41.72
15.86	12.08	41.45
16.43	12.55	41.19
16.97	13.00	40.95
17.48	13.42	40.72
17.98	13.81	40.50
18.44	14.19	40.29
18.88	14.53	40.09
19.30	14.86	39.90
19.68	15.16	39.73
20.04	15.44	39.57
20.38	15.70	39.41
20.68	15.94	39.28
20.96	16.15	39.16
21.22	16.34	39.07
21.45	16.51	39.00

ACTUAL REST POSITION:

21.50	16.50	39.00

FINAL TRAJECTORY TABLE FOR VEHICLE # 2

X (FT)	Y (FT)	YAW (DEG)
10.00	.00	90.00
11.27	.95	89.76
12.48	1.87	89.06
13.62	2.76	87.88
14.70	3.61	86.22
15.72	4.43	84.07
16.68	5.22	81.41
17.58	5.98	78.21
18.42	6.71	74.45
19.19	7.41	70.10
19.92	8.09	65.20
20.63	8.72	60.19
21.35	9.30	55.41
22.08	9.81	50.90
22.82	10.25	46.65
23.56	10.63	42.64
24.30	10.94	38.83
25.02	11.19	35.19
25.73	11.38	31.69
26.42	11.52	28.31
27.08	11.60	25.04
27.71	11.64	21.87
28.31	11.63	18.79
28.87	11.59	15.81
29.40	11.52	12.92
29.89	11.41	10.13
30.34	11.29	7.43
30.75	11.15	4.85
31.12	11.00	2.38
31.44	10.83	.05
31.73	10.67	-2.14
31.99	10.50	-4.17

ACTUAL REST POSITION:

32.00	10.50	20.00

FIGURE 1.32 FINAL CRGRAF TRAJECTORY TABLES, EXAMPLE 1

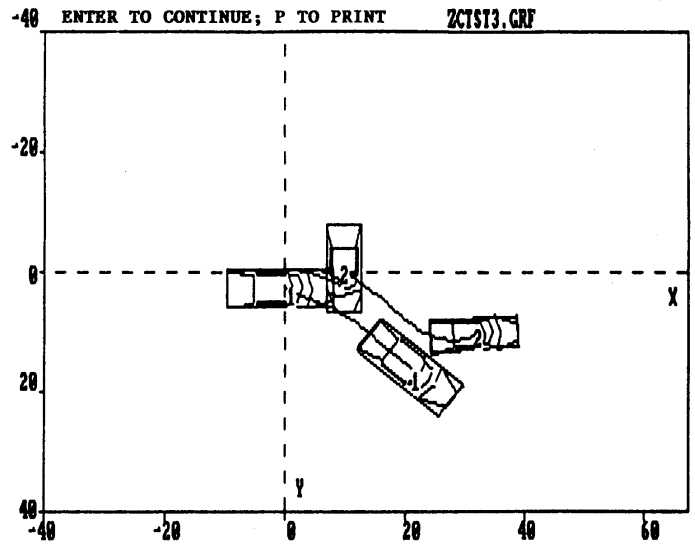

FIGURE 1.33 CRGRAF TRAJECTORY PLOT, EXAMPLE 1

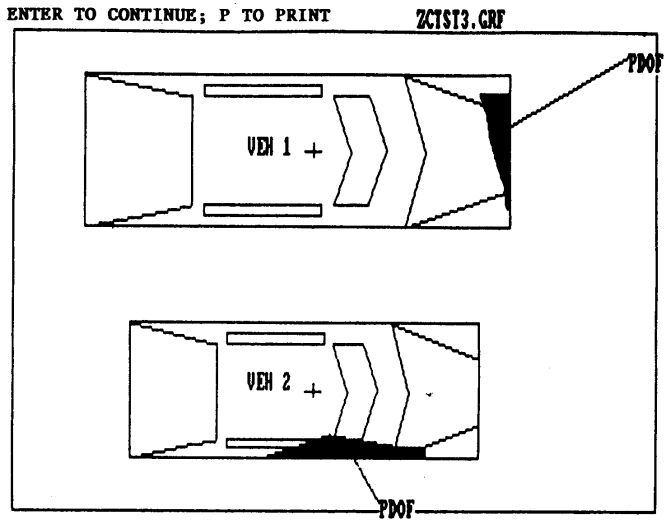

FIGURE 1.34 CRGRAF DAMAGE PLOT, EXAMPLE 1

```
          ------------------------------------------------
          *                                              *
          *                  CRASH3                      *
          *                                              *
          *        MICROCOMPUTER VERSION  1.0            *
          *                                              *
          ************************************************

ENTER RETURN TO CONTINUE:


ENTER TYPE OF CRASH RUN?
(COMPLETE,ABBREVIATED,RERUN,PRINT,SMAC,OR END)  C
    ***********************************************************************
    *                                                                     *
    *                        C R A S H                                    *
    *                                                                     *
    *      CALSPAN RECONTRUCTION OF ACCIDENT SPEEDS ON THE HIGHWAY        *
    *                                                                     *
    *   NOTE: ANSWER ALL QUESTIONS AS DIRECTED.                           *
    *         TERMINATE ALL RESPONSES WITH A CARRIAGE RETURN.             *
    *         RESPONSES MAY BE PLACED ANYWHERE ON A LINE.                 *
    *         SEPARATE RESPONSES BY ONE OR MORE BLANKS.                   *
    *         ENTER A ? TO GET THE COMPLETE VERSION OF A QUESTION.        *
    *         ENTER A $ TO BACKSPACE TO THE PREVIOUS QUESTION.            *
    *         ENTER A BLANK LINE TO GET THE PREDEFINED DEFAULT VALUE.     *
    *         IF YOU MAKE A MISTAKE: (1) BEFORE HITTING CARRIAGE RETURN,  *
    *         TYPE SOME GARBAGE THAT YOU KNOW THE COMPUTER WILL REJECT -  *
    *         THE COMPUTER WILL COMPLAIN AND RESUBMIT THE QUESTION.       *
    *         (2) AFTER HITTING CARRIAGE RETURN YOU'LL HAVE TO USE THE    *
    *         BACKSPACE COMMAND ON THE NEXT QUESTION.                     *
    *                                                                     *
    *         COORDINATE SYSTEM CONVENTIONS: + Y-AXIS RUNS TO THE RIGHT   *
    *         OF THE + X-AXIS. POSITIVE HEADING ANGLES ROTATE CLOCKWISE   *
    *                                                                     *
    ***********************************************************************
?  ENTER RETURN TO CONTINUE:

 1. ENTER A DESCRIPTIVE TITLE?   (80 CHAR. MAX.)
? ZCTST3  85 OLDS 98  VS. 85 OLDS FIRENZA                    12/30/85

 2. ENTER CLASSIFICATIONS AND WEIGHTS FOR BOTH VEHICLES.
        SUGGESTED CLASSIFICATIONS ARE:
          1 -  80.0 TO  94.8 INCH WHEELBASE
          2 -  94.8 TO 101.6 INCH WHEELBASE
          3 - 101.6 TO 110.4 INCH WHEELBASE
          4 - 110.4 TO 117.5 INCH WHEELBASE
          5 - 117.5 TO 123.2 INCH WHEELBASE
          6 - 123.2 TO 150.0 INCH WHEELBASE
          7 - VAN - 109 TO 130 INCH WHEELBASE
          8 - NOT USED
          9 - NOT USED
         10 - MOVABLE BARRIER
         11 - IMMOVABLE BARRIER
        LEGAL WEIGHTS ARE 1000 TO 50000 LBS.
        FORMAT: CLASS(V1) WEIGHT(V1) CLASS(V2) WEIGHT(V2)
        EXAMPLE: 2  1850.  4  3750.
? 4 3300 2 2560

 3. ENTER THE VEHICLE DAMAGE INDEX AND THE DIRECTION OF PRINCIPAL FORCE
        VEHICLE # 1.
        NOTE: THE CDC IS A 7 CHARACTER CODE. SEE APPENDIX 2 IN THE CRASH3
              USER'S GUIDE FOR DETAILS.
              THE PDOF ENTRY ALLOWS THE USER TO SPECIFY THE DIRECTION OF
              PRINCIPAL IMPACT FORCE MORE ACCURATELY THAN THE CDC CLOCK
              DIRECTIONS ALLOWS. THE PDOF ENTRY IS OPTIONAL.
              FORMAT:  CDC(7 CHARACTER CODE )   PDOF(+ OR - 180 DEGREES MAX.)
              EXAMPLE:   12RFEW3   17.
? 11FDEW2 -40
```

FIGURE 1.35 SAMPLE CRASH3 RUN,EXAMPLE 1

```
 4. ENTER THE VEHICLE DAMAGE INDEX AND THE DIRECTION OF PRINCIPAL FORCE
        VEHICLE # 2.
        NOTE: THE CDC IS A 7 CHARACTER CODE. SEE APPENDIX 2 IN THE CRASH3
              USER'S GUIDE FOR DETAILS.
              THE PDOF ENTRY ALLOWS THE USER TO SPECIFY THE DIRECTION OF
              PRINCIPAL IMPACT FORCE MORE ACCURATELY THAN THE CDC CLOCK
              DIRECTIONS ALLOWS. THE PDOF ENTRY IS OPTIONAL.
              FORMAT:  CDC(7 CHARACTER CODE )   PDOF(+ OR - 180 DEGREES MAX.)
              EXAMPLE:   12RFEW3   17.
? 02RYEW3 50

 5. ENTER THE STIFFNESS CATEGORIES FOR VEHICLE 1 AND VEHICLE 2.
        NOTE: THE STIFFNESS CATEGORY IS AN INTEGER CODE
              ( FROM 1 TO 11) FOR THE CRUSH RESISTANCE OF EACH
              VEHICLE. THE APPROPRIATE VALUE SHOULD BE SELECTED
              FROM TABLE 8 - 2 IN SECTION 8 OF THE CRASH3 USER'S GUIDE.
              USE 10,11 AS VALUES FOR MOVING,FIXED BARRIERS.
? 9 2

 6. ARE BOTH REST AND IMPACT POSITIONS KNOWN?
        NOTE: A NEGATIVE RESPONSE LIMITS PROGRAM RESULTS TO VELOCITY CHANGE
              APPROXIMATIONS BASED ON DAMAGE DATA ONLY (ANSWER YES OR NO).
? Y

 7. ENTER REST POSITIONS AND HEADINGS FOR VEHICLE 1 AND VEHICLE 2.
        FORM: XCR1(FT)  YCR1(FT)  PSIR1(DEG)  XCR2(FT)  YCR2(FT)  PSIR2(DEG).
? 21.5 16.5 39 32 10.5 20

 8. ENTER IMPACT POSITIONS AND HEADINGS FOR VEHICLE 1 AND VEHICLE 2.
        FORM: XC10(FT)  YC10(FT)   PSI10(DEG)  XC20(FT)  YC20(FT)  PSI20(DEG).
? 0 3 0 10 0 90

 9. DID EITHER OR BOTH VEHICLES HAVE A SIDE SLIP ANGLE PRIOR TO IMPACT?
        NOTE: SIDE SLIP IS A DIRECTION OF MOTION THAT IS NOT STRAIGHT AHEAD.
              (ANSWER YES OR NO).
? N

11. WAS CONTACT BETWEEN THE VEHICLES SUSTAINED FROM IMPACT TO REST?
        NOTE: A YES ANSWER INDICATES THAT VEHICLE TO VEHICLE
              CONTACT WAS MAINTAINED FROM IMPACT TO REST (ANSWER YES OR NO).
? N

12. DID ROTATIONAL AND/OR LATERAL SKIDDING OF VEHICLE 1 OCCUR?
        NOTE: THIS REFERS TO THAT PORTION OF THE TRAJECTORY DURING WHICH
              THE FRONT AND REAR WHEELS DO NOT RUN THE SAME TRACKS.
              (ANSWER YES OR NO).
? Y

13. DID ROTATIONAL AND/OR LATERAL SKIDDING OF VEHICLE 1 STOP BEFORE
        REST POSITION WAS REACHED?
        NOTE: IT IS COMMON IN A SKIDDING TRAJECTORY TO HAVE AN ABRUPT
              CHANGE IN MOTION AS THE WHEELS START TRACKING ONE ANOTHER
              AND THE VEHICLE MOVES OUT TO REST IN A NON-SKIDDING FASHION
              OF COURSE, THE NON-SKID SECTION MAY BE A STRAIGHT LINE OR
              A CURVED PATH DEPENDING ON THE STEER CONDITIONS (ANSWER YES OR NO
? N
```

FIGURE 1.35 SAMPLE CRASH3 RUN, EXAMPLE 1
(Continued)

```
15. WAS THE SPINOUT PATH OF VEHICLE 1 BETWEEN
    SEPARATION AND REST (OR STOP OF ROTATION) CURVED?
        NOTE: TRY TO VISUALIZE THE PATH OF THE VEHICLE C.G.
              IF A PROMINENT ARC IS PRESENT, ANSWER AFFIRMATIVELY.
              (ANSWER YES OR NO).
? N

17. WHICH DIRECTION DID VEHICLE 1 ROTATE?
        NOTE: CLOCKWISE ROTATION TURNS FROM THE X-AXIS TOWARDS THE Y-AXIS
              FOR THE CASE OF PURELY LATERAL SKIDDING ENTER NONE.
              (RESPOND WITH: CW  CCW  NONE).
? CCW

18. DID VEHICLE 1 ROTATE MORE THAN 360 DEGREES BETWEEN SEPARATION AND REST?
        NOTE: THIS IS RARE OCCURANCE AND SHOULD BE VERIFIED FROM TIRE MARK DATA
              (ANSWER YES OR NO).
? $

17. WHICH DIRECTION DID VEHICLE 1 ROTATE?
        NOTE: CLOCKWISE ROTATION TURNS FROM THE X-AXIS TOWARDS THE Y-AXIS
              FOR THE CASE OF PURELY LATERAL SKIDDING ENTER NONE.
              (RESPOND WITH: CW  CCW  NONE).
? CW

18. DID VEHICLE 1 ROTATE MORE THAN 360 DEGREES BETWEEN SEPARATION AND REST?
        NOTE: THIS IS RARE OCCURANCE AND SHOULD BE VERIFIED FROM TIRE MARK DATA
              (ANSWER YES OR NO).
? N

19. DID ROTATIONAL AND/OR LATERAL SKIDDING OF VEHICLE 2 OCCUR?
        NOTE: THIS REFERS TO THAT PORTION OF THE TRAJECTORY DURING WHICH
              THE FRONT AND REAR WHEELS DO NOT RUN IN THE SAME TRACKS.
              (ANSWER YES OR NO).
? Y

20. DID ROTATIONAL AND/OR LATERAL SKIDDING OF VEHICLE 2 STOP BEFORE
        REST POSITION WAS REACHED?
        NOTE: IT IS COMMON IN A SKIDDING TRAJECTORY TO HAVE AN ABRUPT
              CHANGE IN MOTION AS THE WHEELS START TRACKING ONE ANOTHER
              AND THE VEHICLE MOVES OUT TO REST IN A NON-SKIDDING FASHION
              OF COURSE, THE NON-SKID SECTION MAY BE A STRAIGHT LINE OR
              A CURVED PATH DEPENDING ON THE STEER CONDITIONS (ANSWER YES OR NO
? N

22. WAS THE SPINOUT PATH OF VEHICLE 2 BETWEEN
    SEPARATION AND REST (OR STOP OF ROTATION) CURVED?
        NOTE: TRY TO VISUALIZE THE PATH OF THE VEHICLE C.G.
              IF A PROMINENT ARC IS PRESENT, ANSWER AFFIRMATIVELY.
              (ANSWER YES OR NO).
? N

24. WHICH DIRECTION DID VEHICLE 2 ROTATE?
        NOTE: CLOCKWISE ROTATION TURNS FROM THE X-AXIS TOWARDS THE Y-AXIS
              FOR THE CASE OF PURELY LATERAL SKIDDING ENTER NONE.
              (RESPOND WITH: CW  CCW  NONE).
? CCW
```

FIGURE 1.35 SAMPLE CRASH3 RUN, EXAMPLE 1
(Continued)

```
25. DID VEHICLE 2 ROTATE MORE THAN 360 DEGREES BETWEEN SEPARATION AND REST?
        NOTE: THIS IS RARE OCCURANCE AND SHOULD BE VERIFIED FROM TIRE MARK DATA
              (ANSWER YES OR NO).
? N

26. ENTER THE NOMINAL TIRE-GROUND FRICTION COEFFICIENT?
        NOTE: REFER TO TABLE 2 IN THE CRASH USERS GUIDE FOR TYPICAL
              TIRE-GROUND VALUES.
              FORM:  MU
? .8

27. ROLLING RESISTANCE MAY BE ENTERED AS:
        ---- THE DECIMAL PORTION OF FULL ROTATIONAL LOCKUP AT EACH WHEEL.
        ---- THE LEVEL OF LONGTITUDINAL DECELERATION, IN G UNITS PRODUCED BY
             ROTATIONAL AT THE WHEELS.  (ANSWER 1 OR 2).
? 1

28. ENTER ROLLING RESISTANCES OF WHEELS OF VEHICLE 1.
        NOTE: CAN BE CAUSED BY BRAKING, DAMAGE, ENGINE BRAKING, ETC.
              ENTER VALUE FOR EACH WHEEL FROM 0.0 TO 1.0 (1.0 = FULL WHEEL LOCK
              FORM:  RF  LF  RR  LR.
? .6 .6 .02 .02

29. ENTER ROLLING RESISTANCES OF WHEELS OF VEHICLE 2.
        NOTE: CAN BE CAUSED BY BRAKING, DAMAGE, ENGINE BRAKING, ETC.
              ENTER VALUE FOR EACH WHEEL FROM 0.0 TO 1.0 (1.0 = FULL WHEEL LOCK
              FORM:  RF  LF  RR  LR.
? 1 1 .02 .02

32. DO YOU WANT THE RESULTS CHECKED BY A TRAJECTORY SIMULATION?
        NOTE: THE SEPARATION VELOCITIES NORMALLY CALCULATED BY CRASH
              ARE USED BY A TRAJECTORY SIMULATION TO DETERMINE IF THE ENTERED
              EVIDENCE MATCHES THE CALCULATED SPEEDS. IF NOT, APPROPRIATE
              SPEED ADJUSTMENTS ARE MADE TO OBTAIN AGREEMENT WITH EVIDENCE.
    ***  WARNING  ****  THIS OPTION WILL RESULT IN VERY LENGTHY RUNNING
                        TIMES ON THE MICROCOMPUTER. YOU CAN OBTAIN A TRAJECTORY
                        WHICH IS ALMOST AS ACCURATE BY RUNNING THE GRAPHICS
                        PROGRAM CRGRAF AFTER ENDING THIS PROGRAM
              (ANSWER YES OR NO).
? N

38. ARE ANY ACTUAL DAMAGE DIMENSIONS KNOWN?
        NOTE: A NEGATIVE RESPONSE WILL PRODUCE DAMAGE DATA BASED ON THE
              SUBMITTED CDC OBVIOUSLY, PROVIDING DAMAGE MEASUREMENTS WILL
              ENHANCE RESULTS (ANSWER YES OR NO).
? Y

42. ENTER WIDTH OF DAMAGED AREA ALONG END OF VEHICLE 1.
        NOTE: NASS INVESTIGATORS SHOULD REMEMBER THE PROTOCOL FOR
              INCLUSION OF BOTH DIRECT CONTACT AND INDUCED DAMAGE
              IN THE WIDTH (L) ENTERED INTO THE CRASH3 PROGRAM.
              FORM:  L1  (INCHES).
? 70

43. ENTER A PROFILE OF THE EXTENT OF DAMAGE FOR VEHICLE 1.
        NOTE: AT TWO, FOUR, OR SIX POINTS ALONG THE WIDTH OF THE DENT
              MEASURE THE DEPTH OF THE DAMAGE FROM THE ORIGINAL END DIMENSIONS
              (ENTRY SEQUENCE IS FROM DRIVER TO PASSENGER SIDE).
              FORM:  C1  C2  C3  C4  C5  C6  (INCHES).
? 15 12 10 7 3 2
```

FIGURE 1.35 SAMPLE CRASH3 RUN, EXAMPLE 1
(Continued)

```
44. ENTER DISTANCE ALONG VEHICLE 1 AXIS BETWEEN THE C.G. AND THE MIDDLE
        OF DAMAGED REGION.
        NOTE: IF THIS DISTANCE RUNS OFF TOWARDS THE DRIVER SIDE
              ENTER IT AS A NEGATIVE NUMBER.
              FORM:  D1  (INCHES).
? 0

45. ENTER WIDTH OF DAMAGED AREA ALONG SIDE OF VEHICLE 2.
        NOTE: NASS INVESTIGATORS SHOULD REMINDER THE PROTOCOL FOR INCLUDING
              INDUCED DAMAGE.  THESE RULES REQUIRE THE INCLUSION OF BOTH
              DIRECT CONTACT AND INDUCED DAMAGE IN THE WIDTH (L)
              ENTERED INTO CRASH3 PROGRAM.
              FORM:  L2  (INCHES).
? 95

46. ENTER A PROFILE OF THE EXTENT OF DAMAGE FOR VEHICLE 2.
        NOTE: AT TWO, FOUR, OR SIX POINTS ALONG THE WIDTH OF THE DENT
              MEASURE THE DEPTH OF THE DAMAGE FROM THE ORIGINAL SIDE DIMENSIONS
              (ENTRY SEQUENCE IS FROM REAR TO FRONT OF VEHICLE)
              FORM:  C1  C2  C3  C4  C5  C6  (INCHES).
? 0 5 10 7 5 3

47. ENTER DISTANCE ALONG VEHICLE 1 AXIS BETWEEN THE C.G. AND THE MIDDLE OF
        DAMAGED REGION.
        NOTE: IF THIS DISTANCE RUNS OFF TO THE REAR OF THE VEHICLE
              ENTER IT AS A NEGATIVE NUMBER.
              FORM:  D2  (INCHES).
? 16.75

                    CRASH INPUT COMPLETED
                    THANK YOU VERY MUCH

DO YOU WANT TO SAVE INPUT---
(FOR A RERUN OR FOR RUNNING THE GRAPHICS PROGRAM)

ANSWER (Y OR N) : Y
ENTER FILE NAME FOR SAVING INPUT DATA (CRASH)---ZCTST3

FILE WITH THIS NAME EXISTS---
DO YOU WANT TO OVERWRITE IT (Y/N)? Y
```

FIGURE 1.35 SAMPLE CRASH3 RUN, EXAMPLE 1
(Continued)

S U M M A R Y O F C R A S H 3 R E S U L T S

DIRECTION OF ANGULAR VELOCITY CHANGE OF VEHICLE
2 IS NOT COMPATIBLE WITH MOMENT ARM OF PRINCIPLE FORCE,
ACCORDING TO DAMAGE BASED CALCULATIONS. REVIEW DAMAGE
DATA IF RESULTS ARE QUESTIONABLE.

ZCTST3 85 OLDS 98 VS. 85 OLDS FIRENZA 12/30/85

VEHICLE # 1

IMPACT SPEED MPH		SPEED CHANGE MPH			BASIS OF RESULTS
FWD	LAT	TOTAL	LONG.	LATERAL	
33.0	.0	17.5	-13.1	11.6	SPINOUT TRAJECTORIES AND CONSERVATION OF LINEAR MOMENTUM
					SPINOUT TRAJECTORIES AND DAMAGE
		16.7	-12.8	10.8	DAMAGE DATA ONLY

FIGURE 1.35 SAMPLE CRASH3 RUN, EXAMPLE 1
(Continued)

VEHICLE # 2

IMPACT SPEED MPH		SPEED CHANGE MPH			BASIS OF RESULTS
FWD	LAT	TOTAL	LONG.	LATERAL	
23.7	.0	22.6	-15.0	-17.0	SPINOUT TRAJECTORIES AND CONSERVATION OF LINEAR MOMENTUM
					SPINOUT TRAJECTORIES AND DAMAGE
		21.6	-13.9	-16.5	DAMAGE DATA ONLY

SCENE INFORMATION

	VEHICLE # 1		VEHICLE # 2	
IMPACT X-POSITION	.00	FT.	10.00	FT.
IMPACT Y-POSITION	3.00	FT.	.00	FT.
IMPACT HEADING ANGLE	.00	DEG.	89.99	DEG.
REST X-POSITION	21.50	FT.	32.00	FT.
REST Y-POSITION	16.50	FT.	10.50	FT.
REST HEADING ANGLE	39.00	DEG.	20.00	DEG.
DIRECTION OF ROTATION	CW		CCW	
AMOUNT OF ROTATION	<360		<360	

FIGURE 1.35 SAMPLE CRASH3 RUN, EXAMPLE 1
(Continued)

```
                    COLLISION CONDITIONS

     VEHICLE # 1                          VEHICLE # 2

XC10'    =      .0 FT.                  XC20'    =    10.0 FT.
YC10'    =     3.0 FT.                  YC20'    =      .0 FT.
PSI10    =      .0 DEGREES              PSI20    =    90.0 DEGREES
PSI1D0   =      .0 DEG/SEC              PSI2D0   =      .0 DEG/SEC
BETA1    =      .0 DEGREES              BETA2    =      .0 DEGREES

                    SEPARATION CONDITIONS

XCS1'    =      .0 FT.                  XCS2'    =    10.0 FT.
YCS1'    =     3.0 FT.                  YCS2'    =      .0 FT.
PSIS1    =      .0 DEG                  PSIS2    =    90.0 DEG
US1      =    19.9 MPH                  US2      =     8.8 MPH
VS1      =    11.6 MPH                  VS2      =   -17.0 MPH
PSISD1   =    38.5 DEG/SEC              PSISD2   =   -69.3 DEG/SEC

                    SUMMARY OF RESULTS

    IMPACT SPEED (TRAJECTORY AND CONSERVATION OF LINEAR MOMENTUM)
        FORWARD        LATERAL
VEH#1   33.0 MPH        .0 MPH
VEH#2   23.7 MPH        .0 MPH

    SPEED CHANGE (DAMAGE)
          TOTAL        LONG.        LAT.          ANG.
VEH#1   16.7 MPH    -12.8 MPH     10.8 MPH    -40.0 DEG.
VEH#2   21.6 MPH    -13.9 MPH    -16.5 MPH     50.0 DEG.

    SPEED CHANGE (LINEAR MOMENTUM)
          TOTAL        LONG.        LAT.          ANG.
VEH#1   17.5 MPH    -13.1 MPH     11.6 MPH    -41.4 DEG.
VEH#2   22.6 MPH    -15.0 MPH    -17.0 MPH     48.5 DEG.

ENERGY DISSIPATED BY DAMAGE  VEH#1  63792.5 FT-LB  VEH#2  30100.4 FT-LB

                    RELATIVE VELOCITY DATA

SPEED ALONG LINE THRU CGS (LINEAR MOMENTUM)
   VEH#1      31.6 MPH
   VEH#2       6.8 MPH
SPEED ORTHOG. TO CG LINE (LINEAR MOMENTUM)
   VEH#1       9.5 MPH
   VEH#2     -22.7 MPH
CLOSING VELOCITY (LINEAR MOMENTUM)
             38.4 MPH
```

FIGURE 1.35 SAMPLE CRASH3 RUN, EXAMPLE 1
(Continued)

```
SUMMARY OF DAMAGE DATA                    (* INDICATES DEFAULT VALUE)

            VEHICLE # 1                              VEHICLE # 2

TYPE--------CATEGORY 4                     TYPE--------CATEGORY 2
WEIGHT------   3300.0 LBS.                 WEIGHT------   2560.0 LBS.
CDC---------11FDEW2                       CDC---------02RYEW3
L----------    70.0 IN.                   L----------    95.0 IN.
C1----------   15.0 IN.                   C1----------     .0 IN.
C2----------   12.0 IN.                   C2----------    5.0 IN.
C3----------   10.0 IN.                   C3----------   10.0 IN.
C4----------    7.0 IN.                   C4----------    7.0 IN.
C5----------    3.0 IN.                   C5----------    5.0 IN.
C6----------    2.0 IN.                   C6----------    3.0 IN.
D----------      .0                       D----------   16.8
RHO---------   1.00        *              RHO---------   1.00        *
ANG---------  -40.0 DEG.                  ANG---------   50.0 DEG.
D'----------  -10.1 IN.                   D'----------   17.9 IN.

                    DIMENSIONS AND INERTIAL PROPERTIES

A1      =    54.7     INCHES        A2      =    46.3     INCHES
B1      =    59.2     INCHES        B2      =    50.1     INCHES
TR1     =    61.8     INCHES        TR2     =    54.6     INCHES
I1      =    31949.5  LB-SEC**2-IN  I2      =    19551.1  LB-SEC**2-IN
M1      =   8.540     LB-SEC**2/IN  M2      =   6.625     LB-SEC**2/IN
XF1     =    98.8     INCHES        XF2     =    83.3     INCHES
XR1     =  -114.0     INCHES        XR2     =   -91.6     INCHES
YS1     =    38.5     INCHES        YS2     =    33.6     INCHES

                    ROLLING RESISTANCE

   VEHICLE # 1                              VEHICLE # 2

RF----------     .60                       RF----------    1.00
LF----------     .60                       LF----------    1.00
RR----------     .02                       RR----------     .02
LR----------     .02                       LR----------     .02


MU----------     .80


ENTER TYPE OF CRASH RUN?
(COMPLETE,ABBREVIATED,RERUN,PRINT,SMAC,OR END)  E


                    CRASH PROGRAM COMPLETED.
Stop - Program terminated.

Press any key to continue...
```

FIGURE 1.35 SAMPLE CRASH3 RUN, EXAMPLE 1
(Continued)

```
*********************************************
*                                           *
*                  CRASH3                   *
*                                           *
*        MICROCOMPUTER VERSION  1.0         *
*                                           *
*********************************************

ENTER RETURN TO CONTINUE:

ENTER TYPE OF CRASH RUN?
(COMPLETE,ABBREVIATED,RERUN,PRINT,SMAC,OR END)  A

 1. TITLE?
? ZCTST3 -- MINIMUM TEST DATA

 2. CLASS/WEIGHTS?
? 4 2

 3. CDC/PDOF # 1?
? 11FDEW2

 4. CDC/PDOF # 2?
? 02RYEW3

 5. VEHICLE 1 AND VEHICLE 2 STIFFNESS?
? 9 2

 6. REST & IMPACT? (Y OR N)
? N

38. DAMAGE DIMENSIONS? (Y OR N)
? N

                    CRASH INPUT COMPLETED
                    THANK YOU VERY MUCH


DO YOU WANT TO SAVE INPUT---
(FOR A RERUN OR FOR RUNNING THE GRAPHICS PROGRAM)

ANSWER (Y OR N) : Y
ENTER FILE NAME FOR SAVING INPUT DATA (CRASH)---MINZTST3


          S U M M A R Y   O F   C R A S H 3   R E S U L T S

ZCTST3 -- MINIMUM TEST DATA


    SPEED CHANGE (DAMAGE)
          TOTAL        LONG.        LAT.          ANG.
VEH#1   18.0 MPH    -15.6 MPH     9.0 MPH     -30.0 DEG.
VEH#2   25.1 MPH    -12.5 MPH   -21.7 MPH      60.0 DEG.

ENERGY DISSIPATED BY DAMAGE  VEH#1 130394.0 FT-LB  VEH#2  24786.2 FT-LB
```

FIGURE 1.36 SAMPLE CRASH3 RUN WITH MINIMUM DATA, EXAMPLE 1

The importance of using the most complete data set possible is illustrated by Table 1.4. The best possible results are based on trajectory and damage run results. As data are removed from the input, the results begin to deviate from the results obtained in the trajectory and damage run. In the worst case, Minimum Data, the results are based completely upon the CDC generated damage measurements.

TABLE 1.4

COMPARISON OF RESULTS USING COMPLETE TO MINIMAL AMOUNTS OF DATA

		Total ΔV (mph)	Long. ΔV (mph)	Lat. ΔV (mph)	Energy Dissipated (ft-lb)	Impact Speed (mph)
TRAJ & DAMAGE						
DAMAGE	V1	16.7	-12.8	10.8	63792.5	--
	V2	21.6	-13.9	-16.5	30100.4	--
LINEAR MOMENTUM						
	V1	17.5	-13.1	11.6	63792.5	33.0
	V2	22.6	-15.0	-17.0	30100.4	23.7
AVERAGE	V1	17.1	-12.95	11.2	63792.5	33.0
	V2	22.1	-14.45	-16.75	30100.4	23.7
DAMAGE ONLY						
	V1	16.7	-12.8	10.8	63792.5	--
	V2	21.6	-13.9	-16.5	30100.4	--
V1 L&D ONLY(1) V2 ALL DAMAGE						
	V1	22.7	-17.4	14.6	151275.8	--
	V2	29.3	-18.8	-22.4	30100.4	--
V1 & V2 CDC ONLY(2)						
	V1	23.1	-17.7	14.8	166403.3	--
	V2	29.8	-19.1	-22.8	31678.3	--
MINIMUM DATA(3)						
	V1	18.0	-15.6	9.0	130394.0	--
	V2	25.1	-12.5	-21.7	24786.2	--

(1) V1 has all damage data except crush.
(2) No damage measurements for either vehicle.
(3) No damage measurements, no improved force, no weights.

Sample Run 2:

Title: ZCTST2

Description: A 1980 Triumph Spitfire ran off the road, striking first a curb and then a tree. The tree impact is the subject of this run. The curb impact damage, being non-horizontal, is not within the scope of the CRASH3 program. The vehicle struck the tree head-on with the initial point of impact in the left headlight area. The vehicle rotated counterclockwise to rest next to the tree as shown in Figure 1.37. The computer run is shown in Figure 1.38, the final CRGRAF trajectory table is shown in Figure 1.39, and the CRGRAF trajectory and damage plots are shown in Figures 1.40 and 1.41.

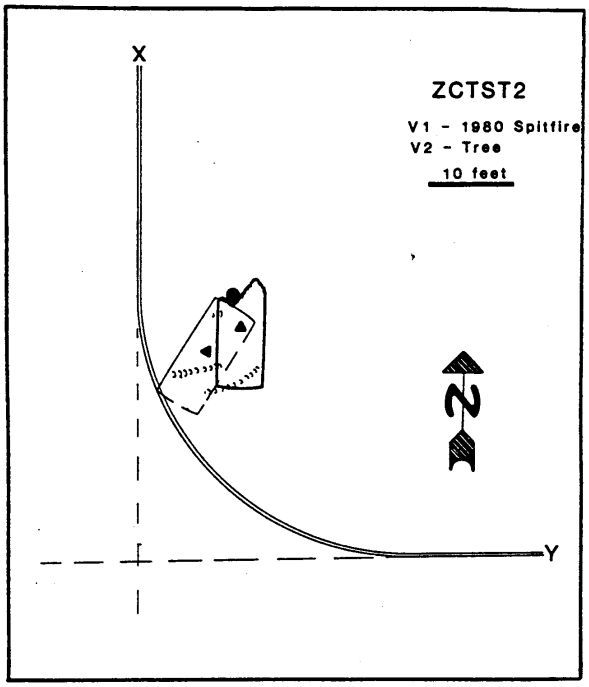

FIGURE 1.37 SCENE SKETCH, EXAMPLE 2

```
*********************************************
*                                           *
*                  CRASH3                   *
*                                           *
*         MICROCOMPUTER VERSION  1.0        *
*                                           *
*********************************************

ENTER RETURN TO CONTINUE:

ENTER TYPE OF CRASH RUN?
(COMPLETE,ABBREVIATED,RERUN,PRINT,SMAC,OR END)  A

 1. TITLE?
? ZCTST2    TRIUMPH HITS TREE           IMPACT 2

 2. CLASS/WEIGHTS?
? 1 2067 11

 3. CDC/PDOF # 1?
? 12FLEN3

 5. VEHICLE 1 AND VEHICLE 2 STIFFNESS?
? 1 11

 6. REST & IMPACT? (Y OR N)
? Y

 7. REST COORDINATES?
? 26 11.5 3434 14 0

    *** YOU MUST ANSWER THIS QUESTION ***

 7. REST COORDINATES?
? 26 11.5 3 34 14 0

 8. IMPACT COORDINATES?
? 23.3 7.9 32 34 14 0

 9. ANY SLIP ANGLES? (Y OR N)
? N

11. SUSTAINED CONTACT? (Y OR N)
? N

12. SKIDDING OF # 1? (Y OR N)
? Y

13. SKIDDING STOP BEFORE REST? (Y OR N)
? N

15. CURVED PATH? (Y OR N)
? N
```

FIGURE 1.38 SAMPLE CRASH3 RUN, EXAMPLE 2

```
17. ROTATION DIRECTION # 1?
? ?

17. WHICH DIRECTION DID VEHICLE 1 ROTATE?
        NOTE: CLOCKWISE ROTATION TURNS FROM THE X-AXIS TOWARDS THE Y-AXIS
              FOR THE CASE OF PURELY LATERAL SKIDDING ENTER NONE.
              (RESPOND WITH: CW  CCW  NONE).
? CCW

18. MORE THAN 360 DEG? (Y OR N)
? N

26. TIRE-GROUND FRICTION?
? .4

27. ROLLING RESISTANCE OPTION? (1 OR 2)
? 1

28. ROLL. RESISTANCES, INDIV. WHEELS # 1?
? .4 1 .5 .5

32. TRAJ. SIMULATION? (*** THIS WILL TAKE A LONG TIME IF SELECTED ***)(Y OR N)
? N

38. DAMAGE DIMENSIONS? (Y OR N)
? Y

42. END DAMAGE WIDTH # 1?
? 50

43. END DAMAGE DEPTH # 1?
? 24 38 28 14 7 3

44. END DAMAGE MIDPOINT OFFSET # 1?
? 0


                    CRASH INPUT COMPLETED
                    THANK YOU VERY MUCH


DO YOU WANT TO SAVE INPUT---
(FOR A RERUN OR FOR RUNNING THE GRAPHICS PROGRAM)

ANSWER (Y OR N) : Y
ENTER FILE NAME FOR SAVING INPUT DATA (CRASH)---ZCTST2

FILE WITH THIS NAME EXISTS---
DO YOU WANT TO OVERWRITE IT (Y/N)? Y

***WARNING***   SEPARATION VELOCITIES ALONG DOPF ARE
          NOT COMPATIBLE, ACCORDING TO ASSUMPTION OF A
          COMMON VELOCITY AT THE DAMAGE AREA CENTROIDS.
```

FIGURE 1.38 SAMPLE CRASH3 RUN, EXAMPLE 2
(Continued)

```
          S U M M A R Y   O F   C R A S H 3   R E S U L T S

ZCTST2    TRIUMPH HITS TREE          IMPACT 2

    IMPACT SPEED (TRAJECTORY AND DAMAGE)
        FORWARD        LATERAL
VEH#1   39.4 MPH        .0 MPH
VEH#2     .1 MPH        .0 MPH


    SPEED CHANGE (DAMAGE)
          TOTAL         LONG.         LAT.          ANG.
VEH#1   33.9 MPH    -33.9 MPH       .0 MPH        .0 DEG.
VEH#2     .1 MPH      -.1 MPH       .0 MPH        .0 DEG.

ENERGY DISSIPATED BY DAMAGE  VEH#1  61618.4 FT-LB  VEH#2       .0 FT-LB


ENTER TYPE OF CRASH RUN?
(COMPLETE,ABBREVIATED,RERUN,PRINT,SMAC,OR END)  P

ENTER DESTINATION FOR PRINT OUTPUT:

     1. PRINTER
     2. DISK FILE

     ENTER NUMBER: 1

MAKE SURE PRINTER IS CONNECTED--
```

FIGURE 1.38 SAMPLE CRASH3 RUN, EXAMPLE 2
(Continued)

S U M M A R Y O F C R A S H 3 R E S U L T S

VEHICLE # 1

IMPACT SPEED MPH		SPEED CHANGE MPH			BASIS OF RESULTS
FWD	LAT	TOTAL	LONG.	LATERAL	
					SPINOUT TRAJECTORIES AND CONSERVATION OF LINEAR MOMENTUM
39.4	.0	33.9	-33.9	2.2	SPINOUT TRAJECTORIES AND DAMAGE
		33.9	-33.9	.0	DAMAGE DATA ONLY

VEHICLE # 2

IMPACT SPEED MPH		SPEED CHANGE MPH			BASIS OF RESULTS
FWD	LAT	TOTAL	LONG.	LATERAL	
					SPINOUT TRAJECTORIES AND CONSERVATION OF LINEAR MOMENTUM
.1	.0	.1	-.1	.0	SPINOUT TRAJECTORIES AND DAMAGE
		.1	-.1	.0	DAMAGE DATA ONLY

FIGURE 1.38 SAMPLE CRASH3 RUN, EXAMPLE 2
(Continued)

SCENE INFORMATION

	VEHICLE # 1	VEHICLE # 2
IMPACT X-POSITION	23.30 FT.	34.00 FT.
IMPACT Y-POSITION	7.90 FT.	14.00 FT.
IMPACT HEADING ANGLE	32.00 DEG.	.00 DEG.
REST X-POSITION	26.00 FT.	34.00 FT.
REST Y-POSITION	11.50 FT.	14.00 FT.
REST HEADING ANGLE	3.00 DEG.	.00 DEG.
END-OF-ROTATION X-POSITION		34.00 FT.
END-OF-ROTATION Y-POSITION		14.00 FT.
END-OF-ROTATION HEADING ANGLE		.00 DEG.
DIRECTION OF ROTATION	CCW	NONE
AMOUNT OF ROTATION	<360	<360

COLLISION CONDITIONS

VEHICLE # 1			VEHICLE # 2		
XC10'	=	23.3 FT.	XC20'	=	34.0 FT.
YC10'	=	7.9 FT.	YC20'	=	14.0 FT.
PSI10	=	32.0 DEGREES	PSI20	=	.0 DEGREES
PSI1DO	=	.0 DEG/SEC	PSI2DO	=	.0 DEG/SEC
BETA1	=	.0 DEGREES	BETA2	=	.0 DEGREES

SEPARATION CONDITIONS

XCS1'	=	23.3 FT.	XCS2'	=	34.0 FT.
YCS1'	=	7.9 FT.	YCS2'	=	14.0 FT.
PSIS1	=	32.0 DEG	PSIS2	=	.0 DEG
US1	=	5.6 MPH	US2	=	.0 MPH
VS1	=	2.2 MPH	VS2	=	.0 MPH
PSISD1	=	-51.5 DEG/SEC	PSISD2	=	.0 DEG/SEC

SUMMARY OF RESULTS

IMPACT SPEED (TRAJECTORY AND DAMAGE)

	FORWARD	LATERAL
VEH#1	39.4 MPH	.0 MPH
VEH#2	.1 MPH	.0 MPH

SPEED CHANGE (DAMAGE)

	TOTAL	LONG.	LAT.	ANG.
VEH#1	33.9 MPH	-33.9 MPH	.0 MPH	.0 DEG.
VEH#2	.1 MPH	-.1 MPH	.0 MPH	.0 DEG.

ENERGY DISSIPATED BY DAMAGE VEH#1 81618.4 FT-LB VEH#2 .0 FT-LB

FIGURE 1.38 SAMPLE CRASH3 RUN, EXAMPLE 2
(Continued)

```
SUMMARY OF DAMAGE DATA                    (* INDICATES DEFAULT VALUE)

            VEHICLE # 1                              VEHICLE # 2

TYPE--------CATEGORY 1                    TYPE--------CATEGORY *
WEIGHT------   2067.0 LBS.                WEIGHT------1000000.0 LBS. *
CDC---------12FLEN3                       CDC---------BARRIER
L----------    50.0 IN.                   L----------       .0 IN.    *
C1----------   24.0 IN.                   C1----------      .0 IN.    *
C2----------   38.0 IN.                   C2----------      .0 IN.    *
C3----------   28.0 IN.                   C3----------      .0 IN.    *
C4----------   14.0 IN.                   C4----------      .0 IN.    *
C5----------    7.0 IN.                   C5----------      .0 IN.    *
C6----------    3.0 IN.                   C6----------      .0 IN.    *
D----------      .0                       D----------       .0        *
RHO---------   1.00        *              RHO---------    1.00        *
ANG---------    -.1 DEG.   *              ANG---------      .0 DEG.   *
D'----------   -7.6 IN.                   D'----------      .0 IN.

                    DIMENSIONS AND INERTIAL PROPERTIES

A1      =    45.1      INCHES          A2      =    50.0      INCHES
B1      =    48.1      INCHES          B2      =    50.0      INCHES
TR1     =    51.1      INCHES          TR2     =    50.0      INCHES
I1      =   10730.9    LB-SEC**2-IN    I2      =2587992000.0  LB-SEC**2-IN
M1      =   5.349      LB-SEC**2/IN    M2      =2587.992      LB-SEC**2/IN
XF1     =    78.0      INCHES          XF2     =    50.0      INCHES
XR1     =   -83.8      INCHES          XR2     =   -50.0      INCHES
YS1     =    30.4      INCHES          YS2     =    50.0      INCHES

                    ROLLING RESISTANCE

   VEHICLE # 1                              VEHICLE # 2

RF----------     .40                       RF----------     .00
LF----------    1.00                       LF----------     .00
RR----------     .50                       RR----------     .00
LR----------     .50                       LR----------     .00

MU----------     .40

ENTER TYPE OF CRASH RUN?
(COMPLETE,ABBREVIATED,RERUN,PRINT,SMAC,OR END)  E

                    CRASH PROGRAM COMPLETED.

Stop - Program terminated.

Press any key to continue...
```

FIGURE 1.38 SAMPLE CRASH3 RUN, EXAMPLE 2
(Continued)

FINAL TRAJECTORY TABLE FOR VEHICLE # 1

X (FT)	Y (FT)	YAW (DEG)
23.30	7.90	32.00
23.60	8.58	29.05
23.91	9.17	26.05
24.22	9.69	23.02
24.53	10.13	19.95
24.84	10.49	16.86
25.13	10.78	13.84
25.40	11.01	11.10
25.65	11.19	8.75
25.87	11.33	6.82
26.07	11.42	5.35
26.23	11.46	4.34
26.37	11.47	3.81
26.48	11.45	3.59
26.55	11.43	3.33
26.60	11.42	3.10

ACTUAL REST POSITION:

26.00	11.50	3.00

FIGURE 1.39 FINAL CRGRAF TRAJECTORY TABLE, EXAMPLE 2

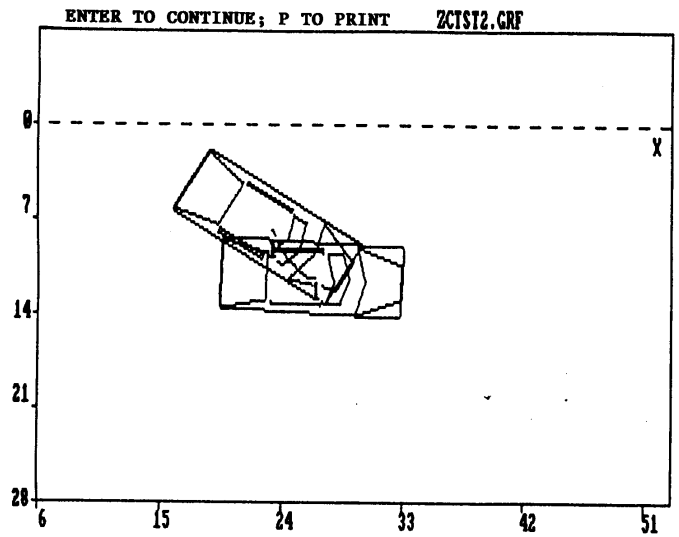

FIGURE 1.40 CRGRAF TRAJECTORY PLOT, EXAMPLE 2

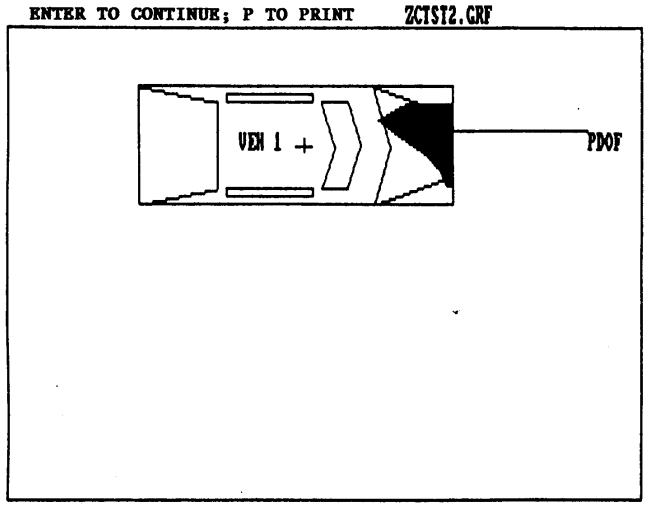

FIGURE 1.41 CRGRAF DAMAGE PLOT, EXAMPLE 2

Sample Run 3:

Title: ZCTST1

Description: A 1985 Oldsmobile 98 (Vehicle 1) struck a parked and occupied 1985 Oldsmobile Firenza (Vehicle 2) in the rear. Both vehicles rotated slightly counterclockwise to a stop as shown in Figure 1.42. The computer output is shown in Figure 1.43, the CRGRAF trajectory table in Figure 1.44, and the CRGRAF trajectory and damage plots in Figures 1.45 and 1.46.

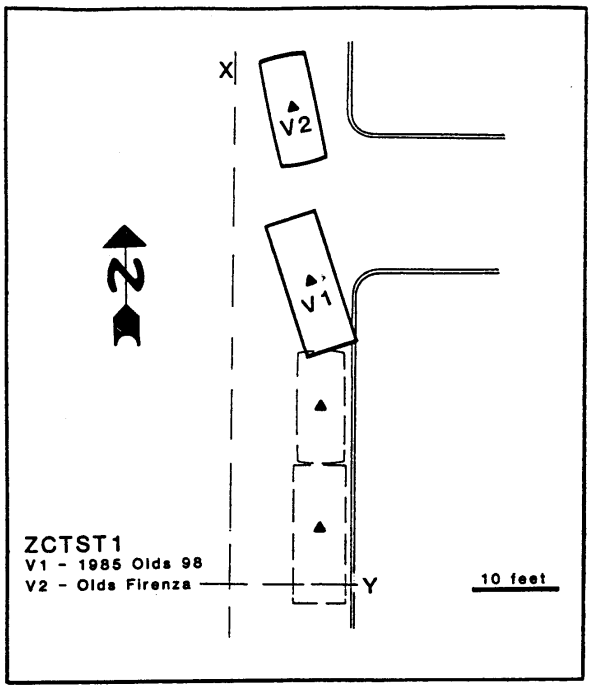

FIGURE 1.42 SCENE SKETCH, EXAMPLE 3

```
*********************************************
*                                           *
*                  CRASH3                   *
*                                           *
*        MICROCOMPUTER VERSION  1.0         *
*                                           *
*********************************************

ENTER RETURN TO CONTINUE:


ENTER TYPE OF CRASH RUN?
(COMPLETE.ABBREVIATED.RERUN.PRINT.SMAC.OR END)  A

 1. TITLE?
? ZCTST1   85 OLDS 98 VS. 85 OLDS FIRENZA     REAR-END IMPACT

 2. CLASS/WEIGHTS?
? 4 3300 2 2560

 3. CDC/PDOF # 1?
? 12FDEW1

 4. CDC/PDOF # 2?
? 06BDEW3

 5. VEHICLE 1 AND VEHICLE 2 STIFFNESS?
? 9 2

 6. REST & IMPACT? (Y OR N)
? Y

 7. REST COORDINATES?
? 34 9 -17.5 60 7 349

 8. IMPACT COORDINATES?
? 6 10 0 20 10 0

 9. ANY SLIP ANGLES? (Y OR N)
? N

11. SUSTAINED CONTACT? (Y OR N)
? N

12. SKIDDING OF # 1? (Y OR N)
? Y

13. SKIDDING STOP BEFORE REST? (Y OR N)
? N

15. CURVED PATH? (Y OR N)
? CCW

    *** SYNTAX ERROR ***

15. CURVED PATH? (Y OR N)
? N

17. ROTATION DIRECTION # 1?
? CCW

18. MORE THAN 360 DEG? (Y OR N)
? N
```

FIGURE 1.43 SAMPLE CRASH3 RUN, EXAMPLE 3

```
19. SKIDDING OF # 2? (Y OR N)
? Y

20. SKIDDING STOP BEFORE REST? (Y OR N)
? N

22. CURVED PATH? (Y OR N)
? N

24. ROTATION DIRECTION # 2?
? CCW

25. MORE THAN 360 DEG? (Y OR N)
? N

26. TIRE-GROUND FRICTION?
? .8

27. ROLLING RESISTANCE OPTION? (1 OR 2)
? 1

28. ROLL. RESISTANCES. INDIV. WHEELS # 1?
? 1 1 .02 .02

29. ROLL. RESISTANCES. INDIV. WHEELS # 2?
? 1 1 .02 .02

32. TRAJ. SIMULATION? (*** THIS WILL TAKE A LONG TIME IF SELECTED ***)(Y OR N)
? N

38. DAMAGE DIMENSIONS? (Y OR N)
? Y

42. END DAMAGE WIDTH # 1?
? 70

43. END DAMAGE DEPTH # 1?
? 6 8 10 10 8 6

44. END DAMAGE MIDPOINT OFFSET # 1?
? 0

48. END DAMAGE WIDTH # 2?
? 60

49. END DAMAGE DEPTH # 2?
? 8 12 14 15 11 8

50. END DAMAGE MIDPOINT OFFSET # 2?
? 0


                    CRASH INPUT COMPLETED
                    THANK YOU VERY MUCH


DO YOU WANT TO SAVE INPUT---
(FOR A RERUN OR FOR RUNNING THE GRAPHICS PROGRAM)

ANSWER (Y OR N) : Y
ENTER FILE NAME FOR SAVING INPUT DATA (CRASH)---ZCTST1

FILE WITH THIS NAME EXISTS---
DO YOU WANT TO OVERWRITE IT (Y/N)? Y
```

FIGURE 1.43 SAMPLE CRASH3 RUN, EXAMPLE 3
(Continued)

```
S U M M A R Y   O F   C R A S H 3   R E S U L T S


DIRECTION OF ANGULAR VELOCITY CHANGE OF VEHICLE
1 IS NOT COMPATIBLE WITH MOMENT ARM OF PRINCIPLE FORCE.
ACCORDING TO DAMAGE BASED CALCULATIONS.  REVIEW DAMAGE
DATA IF RESULTS ARE QUESTIONABLE.

DIRECTION OF ANGULAR VELOCITY CHANGE OF VEHICLE
2 IS NOT COMPATIBLE WITH MOMENT ARM OF PRINCIPLE FORCE.
ACCORDING TO DAMAGE BASED CALCULATIONS.  REVIEW DAMAGE
DATA IF RESULTS ARE QUESTIONABLE.


ZCTST1   85 OLDS 98 VS. 85 OLDS FIRENZA     REAR-END IMPACT

    IMPACT SPEED (TRAJECTORY AND DAMAGE)
        FORWARD        LATERAL
VEH#1   37.8 MPH        .0 MPH
VEH#2    -.1 MPH        .0 MPH

    SPEED CHANGE (DAMAGE)
        TOTAL        LONG.        LAT.          ANG.
VEH#1   18.3 MPH    -18.3 MPH      .0 MPH        .0 DEG.
VEH#2   23.7 MPH     23.7 MPH      .0 MPH     180.0 DEG.

ENERGY DISSIPATED BY DAMAGE  VEH#1  37026.5 FT-LB  VEH#2  47908.5 FT-LB


ENTER TYPE OF CRASH RUN?
(COMPLETE.ABBREVIATED.RERUN.PRINT.SMAC.OR END)  P

ENTER DESTINATION FOR PRINT OUTPUT:

     1. PRINTER
     2. DISK FILE

     ENTER NUMBER: 1

MAKE SURE PRINTER IS CONNECTED--
```

FIGURE 1.43 SAMPLE CRASH3 RUN, EXAMPLE 3
(Continued)

VEHICLE # 1

IMPACT SPEED MPH		SPEED CHANGE MPH			BASIS OF RESULTS
FWD	LAT	TOTAL	LONG.	LATERAL	
					SPINOUT TRAJECTORIES AND CONSERVATION OF LINEAR MOMENTUM
37.8	.0	18.4	-18.3	-.7	SPINOUT TRAJECTORIES AND DAMAGE
		18.3	-18.3	.0	DAMAGE DATA ONLY

VEHICLE # 2

IMPACT SPEED MPH		SPEED CHANGE MPH			BASIS OF RESULTS
FWD	LAT	TOTAL	LONG.	LATERAL	
					SPINOUT TRAJECTORIES AND CONSERVATION OF LINEAR MOMENTUM
-.1	.0	23.7	23.7	-1.8	SPINOUT TRAJECTORIES AND DAMAGE
		23.7	23.7	.0	DAMAGE DATA ONLY

FIGURE 1.43 SAMPLE CRASH3 RUN, EXAMPLE 3
(Continued)

SCENE INFORMATION

	VEHICLE # 1		VEHICLE # 2	
IMPACT X-POSITION	6.00	FT.	20.00	FT.
IMPACT Y-POSITION	10.00	FT.	10.00	FT.
IMPACT HEADING ANGLE	.00	DEG.	.00	DEG.
REST X-POSITION	34.00	FT.	60.00	FT.
REST Y-POSITION	9.00	FT.	7.00	FT.
REST HEADING ANGLE	-17.50	DEG.	348.96	DEG.
DIRECTION OF ROTATION	CCW		CCW	
AMOUNT OF ROTATION	<360		<360	

COLLISION CONDITIONS

VEHICLE # 1			VEHICLE # 2		
XC10'	=	6.0 FT.	XC20'	=	20.0 FT.
YC10'	=	10.0 FT.	YC20'	=	10.0 FT.
PSI10	=	.0 DEGREES	PSI20	=	.0 DEGREES
PSI1D0	=	.0 DEG/SEC	PSI2D0	=	.0 DEG/SEC
BETA1	=	.0 DEGREES	BETA2	=	.0 DEGREES

SEPARATION CONDITIONS

XCS1'	=	6.0 FT.	XCS2'	=	20.0 FT.
YCS1'	=	10.0 FT.	YCS2'	=	10.0 FT.
PSIS1	=	.0 DEG	PSIS2	=	.0 DEG
US1	=	19.4 MPH	US2	=	23.5 MPH
VS1	=	-.7 MPH	VS2	=	-1.8 MPH
PSISD1	=	-48.6 DEG/SEC	PSISD2	=	-40.0 DEG/SEC

SUMMARY OF RESULTS

IMPACT SPEED (TRAJECTORY AND DAMAGE)

	FORWARD	LATERAL
VEH#1	37.8 MPH	.0 MPH
VEH#2	-.1 MPH	.0 MPH

SPEED CHANGE (DAMAGE)

	TOTAL	LONG.	LAT.	ANG.
VEH#1	18.3 MPH	-18.3 MPH	.0 MPH	.0 DEG.
VEH#2	23.7 MPH	23.7 MPH	.0 MPH	180.0 DEG.

ENERGY DISSIPATED BY DAMAGE VEH#1 37026.5 FT-LB VEH#2 47908.5 FT-LB

FIGURE 1.43 SAMPLE CRASH3 RUN, EXAMPLE 3
(Continued)

```
SUMMARY OF DAMAGE DATA                    (* INDICATES DEFAULT VALUE)

            VEHICLE # 1                              VEHICLE # 2

TYPE--------CATEGORY 4                    TYPE--------CATEGORY 2
WEIGHT------   3300.0 LBS.                WEIGHT------   2560.0 LBS.
CDC---------12FDEW1                       CDC---------06BDEW3
L----------    70.0 IN.                   L----------    60.0 IN.
C1----------    6.0 IN.                   C1----------    8.0 IN.
C2----------    8.0 IN.                   C2----------   12.0 IN.
C3----------   10.0 IN.                   C3----------   14.0 IN.
C4----------   10.0 IN.                   C4----------   15.0 IN.
C5----------    8.0 IN.                   C5----------   11.0 IN.
C6----------    6.0 IN.                   C6----------    8.0 IN.
D----------      .0                       D----------      .0
RHO---------   1.00        *              RHO---------   1.00        *
ANG---------    -.1 DEG.   *              ANG---------  180.0 DEG.   *
D'----------     .0 IN.                   D'----------    -.2 IN.

                    DIMENSIONS AND INERTIAL PROPERTIES

A1      =    54.7     INCHES          A2      =    46.3     INCHES
B1      =    59.2     INCHES          B2      =    50.1     INCHES
TR1     =    61.8     INCHES          TR2     =    54.6     INCHES
I1      =   31949.5   LB-SEC**2-IN    I2      =   19551.1    LB-SEC**2-IN
M1      =   8.540     LB-SEC**2/IN    M2      =   6.625      LB-SEC**2/IN
XF1     =    98.8     INCHES          XF2     =    83.3     INCHES
XR1     =  -114.0     INCHES          XR2     =   -91.8     INCHES
YS1     =    38.5     INCHES          YS2     =    33.6     INCHES

                    ROLLING RESISTANCE

   VEHICLE # 1                              VEHICLE # 2

RF----------   1.00                        RF----------   1.00
LF----------   1.00                        LF----------   1.00
RR----------    .02                        RR----------    .02
LR----------    .02                        LR----------    .02


MU----------    .80

ENTER TYPE OF CRASH RUN?
(COMPLETE,ABBREVIATED,RERUN,PRINT,SHAC,OR END)
```

FIGURE 1.43 SAMPLE CRASH3 RUN, EXAMPLE 3
(Continued)

FINAL TRAJECTORY TABLE FOR VEHICLE # 1

X (FT)	Y (FT)	YAW (DEG)
6.00	10.00	.00
7.85	11.26	-.11
9.66	12.38	-.42
11.41	13.38	-.92
13.11	14.24	-1.62
14.75	14.98	-2.49
16.34	15.60	-3.53
17.86	16.09	-4.72
19.32	16.46	-6.04
20.71	16.72	-7.46
22.03	16.88	-8.98
23.27	16.90	-10.55
24.44	16.84	-12.15
25.53	16.68	-13.74
26.53	16.44	-15.28
27.46	16.12	-16.79
28.31	15.74	-18.38
29.09	15.32	-20.16
29.80	14.88	-22.13
30.45	14.42	-24.28
31.03	13.94	-26.52
31.55	13.45	-28.86
32.01	12.96	-31.25
32.42	12.46	-33.66
32.77	11.97	-36.06
33.07	11.49	-38.49
33.32	11.03	-40.86
33.53	10.58	-43.18
33.69	10.15	-45.43
33.83	9.74	-47.61
33.92	9.36	-49.68
33.99	9.00	-51.65

ACTUAL REST POSITION:

34.00	9.00	-17.50

FINAL TRAJECTORY TABLE FOR VEHICLE # 2

X (FT)	Y (FT)	YAW (DEG)
20.00	10.00	.00
22.33	11.31	-.10
24.61	12.50	-.41
26.84	13.55	-.92
29.02	14.48	-1.60
31.13	15.28	-2.46
33.19	15.96	-3.49
35.18	16.51	-4.66
37.11	16.95	-5.96
38.96	17.27	-7.39
40.77	17.48	-8.93
42.48	17.56	-10.55
44.12	17.58	-12.25
45.68	17.48	-13.99
47.15	17.27	-15.76
48.54	16.98	-17.53
49.84	16.60	-19.29
51.06	16.15	-21.06
52.19	15.64	-22.90
53.24	15.07	-24.88
54.20	14.47	-27.04
55.09	13.84	-29.39
55.91	13.18	-31.90
56.64	12.51	-34.56
57.30	11.81	-37.32
57.89	11.11	-40.17
58.40	10.41	-43.08
58.84	9.71	-46.03
59.22	9.01	-49.00
59.53	8.32	-51.99
59.78	7.65	-54.97
59.97	7.00	-57.93

ACTUAL REST POSITION:

60.00	7.00	-11.00

FIGURE 1.44 FINAL CRGRAF TRAJECTORY TABLES, EXAMPLE 3

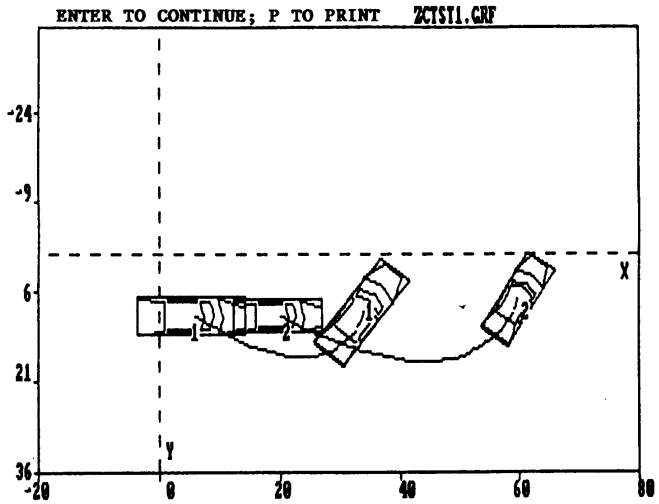

FIGURE 1.45 CRGRAF TRAJECTORY PLOT, EXAMPLE 3

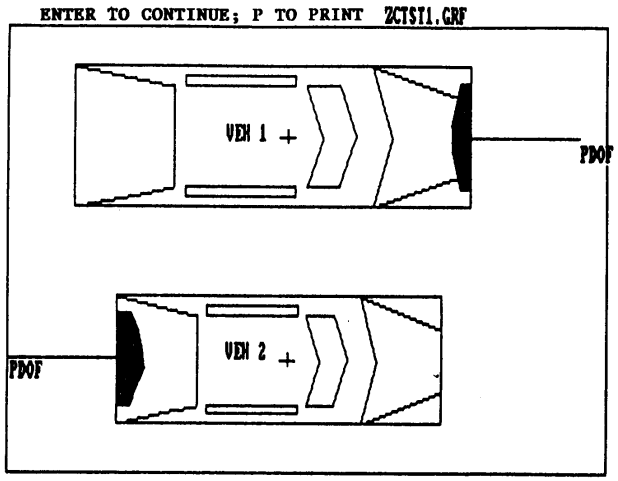

FIGURE 1.46 CRGRAF DAMAGE PLOT, EXAMPLE 3

Sample Run 4:

Title: ZCTST4

Description: A 1985 Oldsmobile 98 (Vehicle 1) hit a 1985 Oldsmobile Firenza (Vehicle 2) head-on. The vehicles were slightly offset at impact and both rotated counterclockwise to rest as shown in Figure 1.47. The computer output is shown in Figure 1.48, the CRGRAF final trajectory tables in Figure 1.49, and the trajectory and damage plots in Figures 1.50 and 1.51.

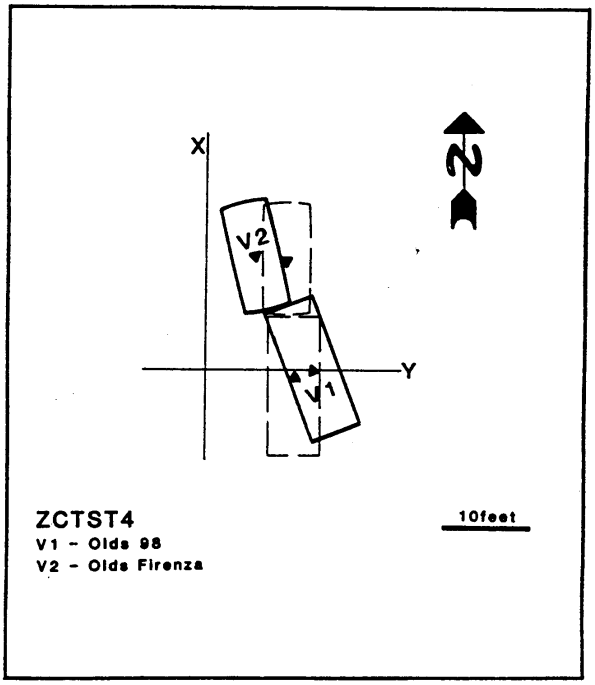

FIGURE 1.47 SCENE SKETCH, EXAMPLE 4

```
*********************************************
*                                           *
*                  CRASH3                   *
*                                           *
*        MICROCOMPUTER VERSION  1.0         *
*                                           *
*********************************************

ENTER RETURN TO CONTINUE:


ENTER TYPE OF CRASH RUN?
(COMPLETE,ABBREVIATED,RERUN,PRINT,SMAC,OR END)  A

 1. TITLE?
? ZCTST4   85 OLDS 98 VS. 85 OLDS FIRENZA      HEAD-ON IMPACT

 2. CLASS/WEIGHTS?
? 4 3300 2 2560

 3. CDC/PDOF # 1?
? 12FDEW3 -10

 4. CDC/PDOF # 2?
? 12FDEW3 -10

 5. VEHICLE 1 AND VEHICLE 2 STIFFNESS?
? 9 9

 6. REST & IMPACT? (Y OR N)
? Y

 7. REST COORDINATES?
? 0 12 -20 12.5 5.5 164

 8. IMPACT COORDINATES?
? -1 10 0 12 9 180

 9. ANY SLIP ANGLES? (Y OR N)
? N

11. SUSTAINED CONTACT? (Y OR N)
? N

12. SKIDDING OF # 1? (Y OR N)
? Y

13. SKIDDING STOP BEFORE REST? (Y OR N)
? N

15. CURVED PATH? (Y OR N)
? N

17. ROTATION DIRECTION # 1?
? CCW

18. MORE THAN 360 DEG? (Y OR N)
? N
```

FIGURE 1.48 SAMPLE CRASH3 RUN, EXAMPLE 4

```
19. SKIDDING OF # 2? (Y OR N)
? Y

20. SKIDDING STOP BEFORE REST? (Y OR N).
? N

22. CURVED PATH? (Y OR N)
? N

24. ROTATION DIRECTION # 2?
? CCW

25. MORE THAN 360 DEG? (Y OR N)
? N

26. TIRE-GROUND FRICTION?
? .8

27. ROLLING RESISTANCE OPTION? (1 OR 2)
? 1

28. ROLL. RESISTANCES, INDIV. WHEELS # 1?
? 1 1 .02 .02

29. ROLL. RESISTANCES, INDIV. WHEELS # 2?
? 1 1 .02 .02

32. TRAJ. SIMULATION? (*** THIS WILL TAKE A LONG TIME IF SELECTED ***)(Y OR N)
? N

38. DAMAGE DIMENSIONS? (Y OR N)
? Y

42. END DAMAGE WIDTH # 1?
? 70

43. END DAMAGE DEPTH # 1?
? 26 22 20 17 10 0

44. END DAMAGE MIDPOINT OFFSET # 1?
? 0

48. END DAMAGE WIDTH # 2?
? 60

49. END DAMAGE DEPTH # 2?
? 30 28 24 18 6 0

50. END DAMAGE MIDPOINT OFFSET # 2?
? 0


          CRASH INPUT COMPLETED
          THANK YOU VERY MUCH
```

FIGURE 1.48 SAMPLE CRASH3 RUN, EXAMPLE 4
(Continued)

```
DO YOU WANT TO SAVE INPUT---
(FOR A RERUN OR FOR RUNNING THE GRAPHICS PROGRAM)

ANSWER (Y OR N) : Y
ENTER FILE NAME FOR SAVING INPUT DATA (CRASH)---ZCTST4

FILE WITH THIS NAME EXISTS---
DO YOU WANT TO OVERWRITE IT (Y/N)? Y


          S U M M A R Y   O F   C R A S H 3   R E S U L T S



DIRECTION OF ANGULAR VELOCITY CHANGE OF VEHICLE
1 IS NOT COMPATIBLE WITH MOMENT ARM OF PRINCIPLE FORCE,
ACCORDING TO DAMAGE BASED CALCULATIONS.  REVIEW DAMAGE
DATA IF RESULTS ARE QUESTIONABLE.

DIRECTION OF ANGULAR VELOCITY CHANGE OF VEHICLE
2 IS NOT COMPATIBLE WITH MOMENT ARM OF PRINCIPLE FORCE,
ACCORDING TO DAMAGE BASED CALCULATIONS.  REVIEW DAMAGE
DATA IF RESULTS ARE QUESTIONABLE.


ZCTST4   85 OLDS 98 VS. 85 OLDS FIRENZA      HEAD-ON IMPACT

    IMPACT SPEED (TRAJECTORY AND DAMAGE)
        FORWARD        LATERAL
VEH#1   27.6 MPH        .0 MPH
VEH#2   31.7 MPH        .0 MPH


    SPEED CHANGE (DAMAGE)
        TOTAL        LONG.        LAT.          ANG.
VEH#1   25.8 MPH    -25.4 MPH     4.5 MPH    -10.0 DEG.
VEH#2   33.3 MPH    -32.8 MPH     5.8 MPH    -10.0 DEG.

ENERGY DISSIPATED BY DAMAGE  VEH#1  83807.8 FT-LB  VEH#2  85977.0 FT-LB


ENTER TYPE OF CRASH RUN?
(COMPLETE,ABBREVIATED,RERUN,PRINT,SMAC,OR END)  P

ENTER DESTINATION FOR PRINT OUTPUT:

     1. PRINTER
     2. DISK FILE

     ENTER NUMBER: 1

MAKE SURE PRINTER IS CONNECTED--
```

FIGURE 1.48 SAMPLE CRASH3 RUN, EXAMPLE 4
(Continued)

S U M M A R Y O F C R A S H 3 R E S U L T S

DIRECTION OF ANGULAR VELOCITY CHANGE OF VEHICLE
1 IS NOT COMPATIBLE WITH MOMENT ARM OF PRINCIPLE FORCE,
ACCORDING TO DAMAGE BASED CALCULATIONS. REVIEW DAMAGE
DATA IF RESULTS ARE QUESTIONABLE.

DIRECTION OF ANGULAR VELOCITY CHANGE OF VEHICLE
2 IS NOT COMPATIBLE WITH MOMENT ARM OF PRINCIPLE FORCE,
ACCORDING TO DAMAGE BASED CALCULATIONS. REVIEW DAMAGE
DATA IF RESULTS ARE QUESTIONABLE.

ZCTST4 85 OLDS 98 VS. 85 OLDS FIRENZA HEAD-ON IMPACT

VEHICLE # 1

IMPACT SPEED MPH		SPEED CHANGE MPH			BASIS OF RESULTS
FWD	LAT	TOTAL	LONG.	LATERAL	
					SPINOUT TRAJECTORIES AND CONSERVATION OF LINEAR MOMENTUM
27.6	.0	25.8	-25.4	4.3	SPINOUT TRAJECTORIES AND DAMAGE
		25.8	-25.4	4.5	DAMAGE DATA ONLY

FIGURE 1.48 SAMPLE CRASH3 RUN, EXAMPLE 4
(Continued)

VEHICLE # 2

IMPACT SPEED MPH		SPEED CHANGE MPH			BASIS OF RESULTS
FWD	LAT	TOTAL	LONG.	LATERAL	
					SPINOUT TRAJECTORIES AND CONSERVATION OF LINEAR MOMENTUM
31.7	.0	33,6	-32.8	7.4	SPINOUT TRAJECTORIES AND DAMAGE
		33.3	-32.8	5.8	DAMAGE DATA ONLY

FIGURE 1.48 SAMPLE CRASH3 RUN, EXAMPLE 4
(Continued)

SCENE INFORMATION

	VEHICLE # 1		VEHICLE # 2	
IMPACT X-POSITION	-1.00	FT.	12.00	FT.
IMPACT Y-POSITION	10.00	FT.	9.00	FT.
IMPACT HEADING ANGLE	.00	DEG.	179.98	DEG.
REST X-POSITION	.00	FT.	12.50	FT.
REST Y-POSITION	12.00	FT.	5.50	FT.
REST HEADING ANGLE	-20.00	DEG.	163.98	DEG.
DIRECTION OF ROTATION	CCW		CCW	
AMOUNT OF ROTATION	<360		<360	

COLLISION CONDITIONS

VEHICLE # 1				VEHICLE # 2			
XC10'	=	-1.0	FT.	XC20'	=	12.0	FT.
YC10'	=	10.0	FT.	YC20'	=	9.0	FT.
PSI10	=	.0	DEGREES	PSI20	=	180.0	DEGREES
PSI1D0	=	.0	DEG/SEC	PSI2D0	=	.0	DEG/SEC
BETA1	=	.0	DEGREES	BETA2	=	.0	DEGREES

SEPARATION CONDITIONS

XCS1'	=	-1.0	FT.	XCS2'	=	12.0	FT.
YCS1'	=	10.0	FT.	YCS2'	=	9.0	FT.
PSIS1	=	.0	DEG	PSIS2	=	180.0	DEG
US1	=	2.1	MPH	US2	=	-1.1	MPH
VS1	=	4.3	MPH	VS2	=	7.4	MPH
PSISD1	=	-70.1	DEG/SEC	PSISD2	=	-41.1	DEG/SEC

SUMMARY OF RESULTS

IMPACT SPEED (TRAJECTORY AND DAMAGE)

	FORWARD	LATERAL
VEH#1	27.6 MPH	.0 MPH
VEH#2	31.7 MPH	.0 MPH

SPEED CHANGE (DAMAGE)

	TOTAL	LONG.	LAT.	ANG.
VEH#1	25.8 MPH	-25.4 MPH	4.5 MPH	-10.0 DEG.
VEH#2	33.3 MPH	-32.8 MPH	5.8 MPH	-10.0 DEG.

ENERGY DISSIPATED BY DAMAGE VEH#1 83807.8 FT-LB VEH#2 85977.0 FT-LB

FIGURE 1.48 SAMPLE CRASH3 RUN, EXAMPLE 4
(Continued)

```
SUMMARY OF DAMAGE DATA                    (* INDICATES DEFAULT VALUE)

            VEHICLE # 1                              VEHICLE # 2

TYPE--------CATEGORY 4                     TYPE--------CATEGORY 2
WEIGHT------   3300.0 LBS.                 WEIGHT------   2560.0 LBS.
CDC---------12FDEW3                       CDC---------12FDEW3
L----------    70.0 IN.                   L-----------    60.0 IN.
C1----------   26.0 IN.                   C1----------    30.0 IN.
C2----------   22.0 IN.                   C2----------    28.0 IN.
C3----------   20.0 IN.                   C3----------    24.0 IN.
C4----------   17.0 IN.                   C4----------    18.0 IN.
C5----------   10.0 IN.                   C5----------     6.0 IN.
C6----------      .0 IN.                  C6----------      .0 IN.
D-----------      .0                      D-----------      .0
RHO---------   1.00        *              RHO---------    1.00        *
ANG---------  -10.0 DEG.                  ANG---------   -10.0 DEG.
D'----------   -8.1 IN.                   D'----------    -9.0 IN.

                    DIMENSIONS AND INERTIAL PROPERTIES

A1       =    54.7     INCHES        A2       =    46.3     INCHES
B1       =    59.2     INCHES        B2       =    50.1     INCHES
TR1      =    61.8     INCHES        TR2      =    54.6     INCHES
I1       =    31949.5  LB-SEC**2-IN  I2       =    19551.1  LB-SEC**2-IN
M1       =   8.540     LB-SEC**2/IN  M2       =   6.625     LB-SEC**2/IN
XF1      =    98.8     INCHES        XF2      =    83.3     INCHES
XR1      =  -114.0     INCHES        XR2      =   -91.6     INCHES
YS1      =    38.5     INCHES        YS2      =    33.6     INCHES

                    ROLLING RESISTANCE

   VEHICLE # 1                              VEHICLE # 2

RF----------   1.00                        RF----------   1.00
LF----------   1.00                        LF----------   1.00
RR----------    .02                        RR----------    .02
LR----------    .02                        LR----------    .02


MU----------    .80


ENTER TYPE OF CRASH RUN?
(COMPLETE,ABBREVIATED,RERUN,PRINT,SMAC,OR END)  E


                    CRASH PROGRAM COMPLETED.

Stop - Program terminated.

Press any key to continue...
```

FIGURE 1.48 SAMPLE CRASH3 RUN, EXAMPLE 4
(Continued)

FINAL TRAJECTORY TABLE FOR VEHICLE # 1

X (FT)	Y (FT)	YAW (DEG)
-1.00	10.00	.00
-.78	10.55	-4.11
-.59	10.99	-8.11
-.43	11.34	-11.78
-.29	11.60	-14.90
-.17	11.80	-17.36
-.08	11.92	-19.11
-.01	11.99	-20.22

ACTUAL REST POSITION:

.00	12.00	-20.00

FINAL TRAJECTORY TABLE FOR VEHICLE # 2

X (FT)	Y (FT)	YAW (DEG)
12.00	9.00	180.00
12.10	8.28	176.84
12.18	7.65	173.93
12.26	7.10	171.34
12.32	6.64	169.11
12.38	6.26	167.28
12.42	5.96	165.88
12.46	5.73	164.93
12.48	5.58	164.41
12.50	5.50	164.30

ACTUAL REST POSITION:

12.50	5.50	164.00

FIGURE 1.49 FINAL CRGRAF TRAJECTORY TABLES, EXAMPLE 4

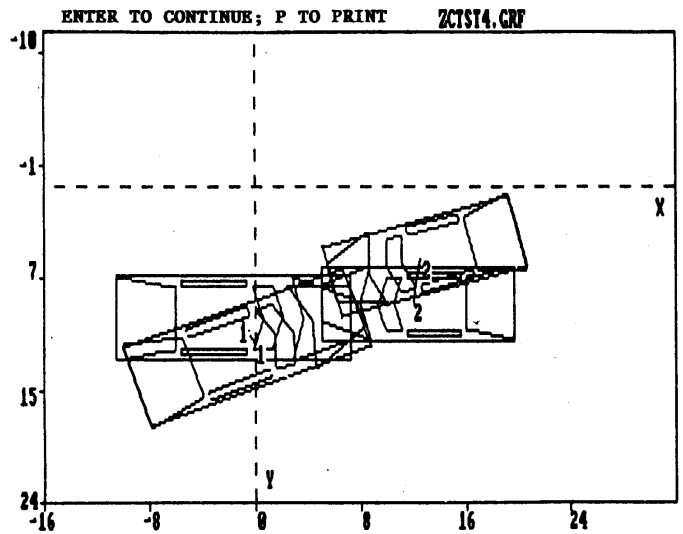

FIGURE 1.50 CRGRAF TRAJECTORY PLOT, EXAMPLE 4

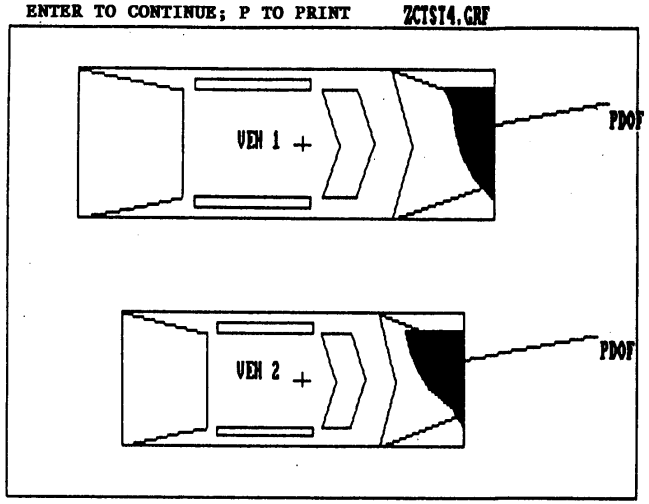

FIGURE 1.51 CRGRAF DAMAGE PLOT, EXAMPLE 4

1.8 INTERPRETATION OF CRASH3 DATA

When a CRASH3 run results in an obviously incorrect answer, it is only natural to presume that a "bug" in the program is the cause. While this is not impossible, the problem is more usually a result of incorrect data or the result of a violation of one of the CRASH3 program's simplifying assumptions. The following is a list of frequent sources of error.

- Trajectory and Scene Data

  Be certain that all trajectory data are correct. There is a validity test which, if failed, results in the "spinout error detected" diagnostic which is sufficiently sensitive that a 1/2 foot difference in impact position may be enough to cause the error message to be printed. In case of trouble, always suspect the data first and thoroughly recheck it.

- Vehicle Categories

  Take the time to make a proper vehicle size category choice. Tables 1.1 and 1.2 should be consulted carefully to match the case vehicles with the proper classifications. Being one size category off can be enough to cause a "spinout error detected" diagnostic.

- Rotation

  Be absolutely certain of the vehicle rotation directions. An incorrect rotation direction can cause outlandish answers.

- Small Data Variations

  In cases where the vehicle impact positions and/or orientations have been estimated and some uncertainty exists, small variations within the ranges of uncertainty should be tested. The corresponding small amounts of leeway may be just enough to bypass a diagnostic to yield a plausible answer. Some of the more difficult cases to handle are impacts into a parked vehicle and those impacts where the vehicles move only a small distance. Use the rerun feature to concentrate on small adjustments, within the ranges of uncertainty, of impact and rest locations and rolling resistance.

- Rolling Resistance

  Be as accurate as possible in the definition of rolling resistance; this is a very sensitive item in achieving good results. Also, insure that the tire-ground friction coefficient is correct.

- Fixed Barriers

  Remember that a fixed barrier is exactly what it says--an immovable object. Impact and rest positions for a barrier must be the same. If they are not, a 400 million pound barrier will require an outlandishly large velocity on the part of the striking vehicle to move it any distance.

- Side-slip Angles

  The assumption that the pre-collision velocity vectors of the colliding vehicles are always aligned along their longitudinal axes has been found to be inappropriate for a significant number of accident cases in which skidding of at least one vehicle occurs prior to the collision. In McHenry,[2] for example, more than 6% of the side-impact cases that were studied included skidding of at least one vehicle prior to the collision. When pre-collision skidding occurs, the heading direction of the skidding vehicle is generally not aligned with its velocity vector at the point of impact. The angle between the heading direction and the velocity vector of the vehicle is referred to as the side-slip angle, BETA, as shown in Figure 1.13.

The introduction of initial side-slip angles makes a long-recognized application problem of the CRASH3 program more acute. In particular, the case of initial velocity vectors that are nearly parallel is approximated in CRASH3 by means of an "axial" form of solution that is based, in part, on damage information. The axial solution form is made necessary by the failure of linear momentum relationships to yield reliable results for nearly parallel initial velocity vectors. When the initial velocity vectors are actually parallel, the linear momentum relationships become indeterminate. The axial solution form is theoretically correct only for the case of front-to-front central collisions and, therefore, it yields reasonable accurate approximations only for nearly colinear velocity vectors.

- Roadside Objects

There are many complicating factors in actual highway accidents that constitute minor or major violations of the simplifying assumptions on which the analytical relationships of the CRASH3 computer program are based. In its present form, CRASH3 has been designed and is suitable primarily for dealing with collisions

that occur between two vehicles and which involve simple spinout trajectories on a flat, horizontal, uniform surface. The limitations of its generality reflect, to a large extent, its early stage of development.

Extensions of CRASH3 generality to include contacts of one or both vehicles with roadside objects and/or terrain features can be effectively achieved by means of the use of a virtual rest position and orientation for a vehicle, that correspond to its velocity and heading at the point of contact with the roadside object. For example, if one of the vehicles hits a tree or utility pole subsequent to the primary collision, its velocity and heading at the point of contact with the tree or pole can be approximated on the basis of the corresponding damage and the motion subsequent to tree contact. The term "virtual rest position and orientation" is used here to mean the rest position and orientation that would have occurred on a horizontal, flat uniform surface without any secondary contacts with roadside objects. By using such data for the rest position and orientation, the momentum calculations of CRASH3 can be applied to approximate the speeds and speed-changes

corresponding to the primary vehicle-to-vehicle collision event. In cases where the damage produced by primary and secondary collisions can be sorted out, the damage analysis portion of CRASH3 can also provide a separate estimate of the speed change in the primary collision event.

- Energy Absorbed by Roadside Objects

  When a rigid, fixed roadside object is contacted, approximation of the corresponding speed change must be based entirely on the related damage to the vehicle. When the roadside object moves or is deformed by the collision, it is necessary to properly account for the corresponding energy absorption by the object. In dealing with collisions with roadside objects, it is essential to recognize the fact that, while the extent of related damage to the vehicle provides a measure of the peak magnitude of the collision force, it is necessary to approximate the duration of the force in order to interpret the collision in terms of the speed change ΔV. Thus the mass and crush resistance of a movable obstacle must be taken into account.

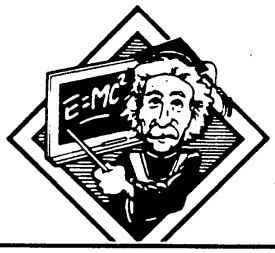

CHAPTER 2 MATHEMATICAL FOUNDATIONS

2.1 INTRODUCTION

The CRASH3 program is an assembly of algorithms for estimating the pre-impact as well as post-impact state of two vehicles. For example, in one algorithm, CRASH3 calculates a change in velocity based on the energy required to produce the observed damage. In another algorithm, the separation velocity of each vehicle is estimated from trajectory data. The following chapter presents the analytical development of those algorithms. The typical user generally does not need to concern himself with the specifics of this chapter as long as he is fully aware of the limitations inherent in the model as explained in Section 1.2. Using CRASH3 has been described by some as "inserting a few numbers into the black box [and expecting] valid and accurate results";[17] this is not the case. There is no substitute for the judgment and experience of accident investigators. The CRASH3 user is presumed to have some intuition about the causes, sequence, and results of motor vehicle collisions. CRASH3 is only a tool for reconstructing accidents; it must be used with care and judgment and its results must be reasonable to the accident reconstructionist. There is no reason, however, that the CRASH3 user must be familiar with each step in the algorithm's

development if he understands the limitations of the model.

The five basic assumptions of the CRASH3 model are restated below.

1. The driver's control of the vehicle ceases at impact.

2. At some time during the interaction both vehicles achieve a common velocity at the collision interface.

3. The program is two dimensional; therefore, vertical effects such as rollover, steep grades, and curb mountings cannot be modeled directly.

4. Vehicle properties are average properties for a vehicle class. The properties used may or may not adequately represent a particular vehicle.

5. Crush stiffnesses are assumed to be uniform over the side, front, or back of the vehicle.

It is also useful at this stage to consider the intent of the CRASH3 program. Because of its availability, CRASH3 is viewed by many as a tool for accident reconstructionists involved in litigation. A vehicle collision is a very complex event and one should not expect high fidelity from a computer program filled with assumptions and

simplifications. CRASH3 was designed as a research tool for identifying and establishing trends in crash severity parameters such as the change in velocity, ΔV, in highway accident data. In particular, it has been useful in measuring the speed change of vehicles during an impact: a parameter that is useful in assessing crash severity. As Section 2.5 will indicate, CRASH3 can yield completely false answers for a particular case, depending on the quality of the field data, the correspondence between the real vehicle and CRASH3's assumed vehicle, as well as the degree to which the above outlined simplifying assumptions are met. On the whole, though, CRASH3 is statistically a good predictor of trends; inferences made about a large number of accidents are very likely to be representative of collisions in the real world.

One recurring theme in this chapter will be the limitations imposed by very sparse crash test data. Many, if not most, of CRASH3's problems can be directly attributed to insufficient data from full-scale vehicle crash tests. In addition, there will always be a need for new data as the vehicle population changes.

In summary, CRASH3 is a very useful research tool which possesses certain inherent limitations. The limitations of the program should always be rigorously observed and the final responsibility for accuracy, as with all software tools, lies with the user and not with the program developer.

2.2 DAMAGE ANALYSIS

Hand calculation techniques for damage analysis that yield reasonable estimates of the impact velocity in frontal collisions have been developed by Emori[18] for full width contact and by Campbell[19] for partial width contact using linear approximations of the relationship between residual crush and impact velocity. The SMAC program[20,16] applies a similar analytical approach to the entire peripheral structure, and it has been demonstrated to yield good approximations of both impact velocity and speed change, ΔV, in general collision configurations including oblique, non-central impacts. The objective of the following analysis is to develop a single, closed-form damage analysis technique that is applicable to general collision configurations.

2.2.1 Central Collisions

In the case of central collisions where the line-of-action of the collision force passes through the centers of masses of the two vehicles, as shown in Figure 2.1, the extents and areas of residual crush on the two vehicles provide a basis for estimating the relative velocity at impact of the vehicles. The following simplified, linear

analysis provides relationships for such estimates.

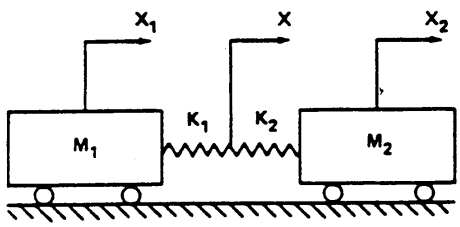

FIGURE 2.1 SCHEMATIC REPRESENTATION OF CENTRAL COLLISION

In Figure 2.1, the symbols are defined as follows:

M_1, M_2 = Masses of Vehicles 1 and 2, lb sec^2/in.

K_1, K_2 = Linear approximations of peripheral crush stiffness of contact areas of Vehicles 1 and 2, for increasing load, lb/in.

X_1, X_2 = Displacements of centers of masses, inches.

X = Displacements of collision interface, inches.

In the following derivation, the time derivative of a variable is indicated by a dot over the symbol for the variable, and the subscript zero is used to indicate the initial value of a variable at time zero.

Application of Newton's Second Law to the system depicted in Figure 2.1 yields

$$M_1\ddot{X}_1 = -\left(\frac{K_1K_2}{K_1 + K_2}\right)(X_1 - X_2) \qquad (2.1)$$

$$M_2\ddot{X}_2 = \left(\frac{K_1K_2}{K_1 + K_2}\right)(X_1 - X_2) \qquad (2.2)$$

To facilitate solution of equations (2.1) and (2.2), let the relative displacements of V1 and V2 equal $\delta = X_1 - X_2$, $\dot{\delta}_0 = \dot{X}_{1,0} - \dot{X}_{2,0}$. Using the Newtonian Notation of derivatives, $\dot{\delta}_0$ is therefore the relative collision velocity of V1 with respect to V2.

$$\ddot{\delta} + \left(\frac{K_1K_2}{K_1 + K_2}\right)\left(\frac{M_1 + M_2}{M_1M_2}\right)\delta = 0 \qquad (2.3)$$

Solving (2.3) for the maximum relative displacement,

$$(\delta)_{max} = (\dot{X}_{1,0} - \dot{X}_{2,0})\sqrt{\frac{(K_1 + K_2)\,M_1M_2}{K_1K_2\,(M_1 + M_2)}} \text{ inches}$$

(2.4)

Let $\delta_1 = X_1 - X$, $\delta_2 = X - X_2$.

For force equilibrium,

$$K_1\delta_1 = K_2\delta_2 \qquad (2.5)$$

And, by definition

$$\delta_1 + \delta_2 = \delta \qquad (2.6)$$

Solution of (2.5) and (2.6) for δ_1 yields

$$\delta_1 = \left(\frac{K_2}{K_1 + K_2} \right) \delta \qquad (2.7)$$

Equation (2.4) can be restated in the following form,

$$\dot{X}_{1,0} - \dot{X}_{2,0} = \sqrt{\frac{(M_1 + M_2)\ K_1 K_2\ (\delta)^2 max}{M_1 M_2\ (K_1 + K_2)}}$$

(2.8)

From (2.7), (2.6), and (2.5),

$$\dot{X}_{1,0} - \dot{X}_{2,0} = \sqrt{\frac{(M_1 + M_2)\ (K_1 \delta_1^2 + K_2 \delta_2^2)}{M_1 M_2}}$$

(2.9)

The energy absorbed in peripheral crush of Vehicles 1 and 2 can be expressed as

$$E_1 = \frac{1}{2} K_1 \delta_1^2 \text{ lb in.} \qquad (2.10)$$

$$E_2 = \frac{1}{2} K_2 \delta_2^2 \text{ lb in.} \qquad (2.11)$$

Substitution of (2.10) and (2.11) into (2.9) yields the relative collision velocity

$$\dot{X}_{1,0} - \dot{X}_{2,0} = \sqrt{\frac{(M_1 + M_2)\ 2\ (E_1 + E_2)}{M_1 M_2}}$$

(2.12)

Having calculated the relative collision speed, it is now possible to compute the velocity change experienced by each individual vehicle. The following derivation of the expressions for velocity change are taken from McHenry.[21] It is important to make a clear distinction between the total change in velocity and the change in velocity during the approach period. The approach period is the time between the initial contact between vehicles and the time when maximum crush occurs. The velocities of the two vehicles are assumed to be equal at the moment of maximum crush; this velocity is denoted by V_c. The total change in velocity is the change during the approach period added to the change during the separation period, the period between maximum crush and complete separation. The initial kinetic energy of the two vehicle system is given by

$$KE_0 = \frac{1}{2} M_1 \dot{X}_{10}^2 + \frac{1}{2} M_2 \dot{X}_{20}^2 \qquad (2.13)$$

From Conservation of Momentum, the common velocity, V_c, may be obtained.

$$V_c = \frac{M_1\dot{X}_{1,0} + M_2\dot{X}_{2,0}}{M_1 + M_2} \qquad (2.14)$$

The change in kinetic energy of the system during the approach period is

$$E_A = KE_0 - KE_c$$

$$= \frac{1}{2} M_1\dot{X}_{10}^{\,2} + \frac{1}{2} M_2\dot{X}_{20}^{\,2} - \frac{1}{2} (M_1 + M_2) V_c^{\,2}$$

$$= \frac{1}{2} \left(\frac{M_1M_2}{M_1 + M_2} \right) (\dot{X}_{10} - \dot{X}_{20})^2 \qquad (2.15)$$

The change in velocity during the approach period for each vehicle can be obtained as follows using equation (2.14), the prime symbol denoting that this is the approach-period change in velocity.

$$\Delta V_1' = V_c - \dot{X}_{10} = \left(\frac{M_1\dot{X}_{10} + M_2\dot{X}_{20}}{M_1 + M_2} \right) - \dot{X}_{10}$$

$$= - \left(\frac{M_2}{M_1 + M_2} \right) (\dot{X}_{10} - \dot{X}_{20}) \qquad (2.16)$$

$$\Delta V_2' = V_c - \dot{X}_{20} = \left(\frac{M_1}{M_1 + M_2} \right) (\dot{X}_{10} - \dot{X}_{20})$$

(2.17)

The relative velocity term, $\dot{X}_{10} - \dot{X}_{20}$, in equations (2.16) and (2.17) can be replaced by solving equation (2.15).

$$\Delta V_1' = \sqrt{\frac{2E_A M_2}{M_1 (M_1 + M_2)}} \qquad (2.18)$$

$$\Delta V_2' = \sqrt{\frac{2E_A M_1}{M_2 (M_1 + M_2)}} \qquad (2.19)$$

An important assumption of the CRASH3 program is that the energy dissipated during the approach period, E_A, can be approximated using residual crush measurements. Equations (2.18) and (2.19), however, are independent of the particular form of the energy equation and any means of estimating E_A would be acceptable for computing the change in velocity above.

The coefficient of restitution is defined as:

$$\epsilon = \frac{\dot{X}_{2f} - \dot{X}_{1f}}{\dot{X}_{10} - \dot{X}_{20}} \qquad (2.20)$$

where $\dot{X}_f$ denotes the separation velocities of Vehicles 1 and 2. The following expressions can be written using the principle of conservation of linear momentum and equation (2.20) where the

change in velocity during the separation phase is denoted below with a double prime.

$$\Delta V_1'' = V_{1f} - \left(\frac{M_1 V_{1f} + M_2 V_{2f}}{M_1 + M_2} \right)$$

$$= - \frac{\varepsilon M_2}{M_1 + M_2} \quad (\dot{X}_{10} - \dot{X}_{20}) \qquad (2.21)$$

$$\Delta V_2'' = V_{2f} - \left(\frac{M_1 V_{1f} + M_2 V_{2f}}{M_1 + M_2} \right)$$

$$= \frac{\varepsilon M_1}{(M_1 + M_2)} \quad (\dot{X}_{10} - \dot{X}_{20}) \qquad (2.22)$$

Recalling that the total change in velocity is the sum of the change during the approach and separation phases, expression for the total change in velocity can be written using equations (2.21), (2.22), (2.16), and (2.17).

$$\Delta V_1 = \Delta V_1' + \Delta V_1'' = -(1 + \varepsilon) \frac{M_2}{M_1 + M_2} (\dot{X}_{10} - \dot{X}_{20})$$

(2.23)

$$\Delta V_2 = \Delta V_2^{I} + \Delta V_2^{II} = (1 + \varepsilon) \frac{M_1}{M_1 + M_2} (\dot{X}_{10} - \dot{X}_{20})$$

(2.24)

And finally using the energy term, E_A, from equation (2.15), the following expressions for total change in velocity result.

$$\Delta V_1 = -(1 + \varepsilon) \sqrt{\frac{2E_A M_2}{M_1 (M_1 + M_2)}} \qquad (2.25)$$

$$\Delta V_2 = (1 + \varepsilon) \sqrt{\frac{2E_A M_1}{M_2 (M_1 + M_2)}} \qquad (2.26)$$

In the CRASH3 program, the energy dissipated during the approach period, E_A, is calculated as the sum of equations (2.10) and (2.11).

$$E_A = E_1 + E_2 = \frac{1}{2} \delta^2 (K_1 + K_2) \qquad (2.27)$$

In 1975 when CRASH3 was first developed, not enough was known about the magnitude and variation of the coefficient of restitution for automotive structures. As a result, the following approach was taken to account empirically for the coefficient of restitution. As will be shown in

Section 2.2.3, the energy term is estimated empirically from crash tests. If the empirical coefficients A, B, and G are calculated using $\Delta V'$, the change in velocity during the approach period, the empirical stiffness coefficients will correspond to the actual absorbed energy, E_A. If the total change in velocity ΔV, is used, the values of A, B, and G will correspond to $(1 + \varepsilon)^2 E_A$.

Thus, equation (2.25) can be rewritten as

$$\Delta V_1 = - \sqrt{\frac{2 (1 + \varepsilon)^2 E_A M_2}{M_1 (M_1 + M_2)}} \qquad (2.28)$$

If E_T is defined as the effective energy, where

$$E_T = (1 + \varepsilon)^2 E_A \qquad (2.29)$$

Equation (2.28) reduces to

$$\Delta V_1 = - \sqrt{\frac{2E_T M_2}{M_1 (M_1 + M_2)}} \qquad (2.30)$$

This is the equation which originally appeared in the 1981 edition of the CRASH3 User's Manual.[22]

Equation (2.29) can now be rewritten as

$$E_T = (1 + \varepsilon)^2 E_A = \frac{1}{2} (1 + \varepsilon)^2 \delta^2 (K_1 + K_2) \tag{2.31}$$

Section 2.2.3 discusses a method for estimating the total energy, E_T. Thus far, the equations developed could be used regardless of how the value of E_T was developed. The total energy will be estimated by calculating empirical coefficients A, B, and G which correspond to the quantity $(1 + \varepsilon)^2 E_A$. If the empirical coefficients are calculated using the maximum dynamic crush, the result will be the approach period change in velocity. If the residual crush is used, the effects of restitution will be accounted for, resulting in the total change in velocity.

2.2.2 Non-Central Collisions

In the above case of a central collision, the vehicle center-of-mass and the collision interface have the same velocity. In the more general case of non-central collisions, a common velocity is achieved only in the region of collision contact rather than at the centers of gravity. For example, in the hypothetical offset frontal collision depicted in Figure 2.2, a common velocity is reached at point P.

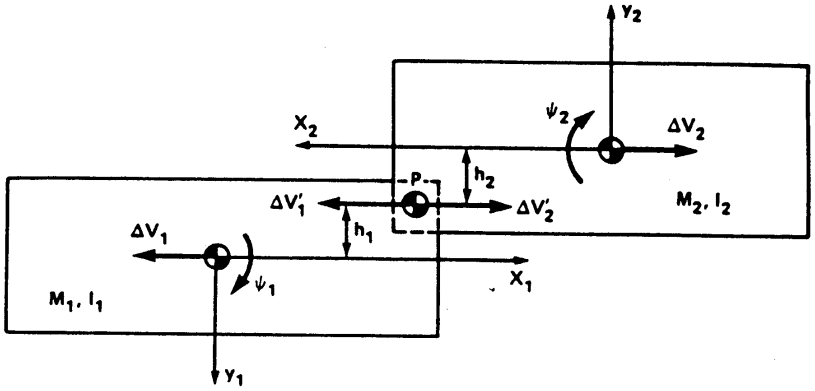

FIGURE 2.2 OFFSET FRONTAL COLLISION

In Figure 2.2, the collision force acting on Vehicle 1 does not have a line of action through the vehicle center of mass. Consequently, it influences the translational and angular acceleration of the vehicle. If the moment area of the impact force is h_1, the relationship between acceleration at the center of mass, $\ddot{X}_1$, and acceleration at the interface, $\ddot{X}_p$, is

$$\ddot{X}_1 = \ddot{X}_p - h_1\ddot{\Psi}_1 \qquad (2.32)$$

where h_1 is the moment area and $\ddot{\Psi}_1$ is the angular acceleration. Two equilibrium equations, one involving translation and one involving rotation, relate the force to the vehicle's inertia and acceleration.

$$F_x = -M_1\ddot{X}_1 \qquad (2.33)$$

and

$$F_x h_1 = -I_1\ddot{\Psi}_1 = -K_1 M_1\ddot{\Psi}_1 \qquad (2.34)$$

where K_1 is the radius of gyration of Vehicle 1 about its yaw axis. Using the kinematic relationship in equation (2.32), the expression of equation (2.33) can be written

$$F_x = -M_1\,(\ddot{X}_p - h_1\ddot{\Psi}_1) \qquad (2.35)$$

From (2.34), the angular acceleration of Vehicle 1, is

$$\ddot{\Psi}_1 = - \frac{F_x h_1}{M_1 k_1^2} \tag{2.36}$$

Substitution of (2.36) in (2.35) yields

$$\ddot{X}_p = - \frac{F_x}{M_1} \left(\frac{k_1^2 + h_1^2}{k_1^2} \right) \tag{2.37}$$

$$\ddot{X}_1 = - \frac{F_x}{M_1} = \left(\frac{k_1^{2'}}{k_1^2 + h_1^2} \right) \ddot{X}_p \tag{2.38}$$

Let $\gamma_1 = \dfrac{k_1^2}{k_1^2 + h_1^2}$, then from (2.38),

$$\ddot{X}_1 = \gamma_1 \ddot{X}_p \tag{2.39}$$

Integration of equation (2.39) over the time interval during which a common velocity is reached at point P yields

$$\Delta \dot{X}_1 = \gamma_1 \Delta \dot{X}_p, \text{ or} \tag{2.40}$$

$$\Delta V_1 = \gamma_1 \Delta V_1' \tag{2.41}$$

where $\Delta V_1'$ is the velocity change during the approach period of the collision at point P.

From (2.37), the "effective mass" of Vehicle 1 acting at point P may be expressed as $\gamma_1 M_1$. Similarly, the effective mass of Vehicle 2 acting at point P may be expressed as $\gamma_2 M_2$. Substitution of the effective masses into equations (2.25) and (2.26) yields expressions for the velocity change (approach period) at point P.

$$\Delta V_1' = \sqrt{\frac{2E_T}{\gamma_1 M_1 \, (1 + \gamma_1 M_1/\gamma_2 M_2)}} \qquad (2.42)$$

$$\Delta V_2' = \sqrt{\frac{2E_T}{\gamma_2 M_2 \, (1 + \gamma_2 M_2/\gamma_1 M_1)}} \qquad (2.43)$$

From equation (2.41) and the corresponding expression for Vehicle 2, the velocity changes (approach period) at the center of gravity of the two vehicles are obtained.

$$\Delta V_1 = \sqrt{\frac{2 \, \gamma_1 \, E_T}{M_1 \, (1 + \gamma_1 M_1/\gamma_2 M_2)}} \qquad (2.44)$$

$$\Delta V_2 = \sqrt{\frac{2\ \gamma_2\ E_T}{M_2\ (1 + \gamma_2 M_2/\gamma_1 M_1)}} \qquad (2.45)$$

It should be noted that when $\gamma_1 = \gamma_2 = 1.00$, equations (2.44) and (2.45) reduce to the central-impact relationships of equations (2.25) and (2.26).

2.2.3 Absorbed Energy

A key component in equation (2.30) is the energy term, E_T. As was noted previously, the damage analysis technique described in Section 2.2 is independent of how the value of total dissipated energy, E_T, is estimated. The following section outlines the method used in CRASH3 to arrive at the energy of deformation.

The calculation of absorbed energy is based on residual crush and is patterned after that developed by Campbell[19] for barrier collisions. The only signficant difference is in the treatment of the energy absorbed elastically as being proportional to the contact width rather than a constant.

Several assumptions about the stiffness of vehicles are made which are not truly valid, but which make the solution tractable. The first assumption is that the force-deflection relationship of a vehicle's structure can be approximated by a linear function, as shown in Figure 2.3. Although very few materials or structures behave linearly over an extended range of deformation, this is a frequently used assumption in engineering. In a narrowly defined range, many materials behave in a linear fashion. Once deflections fall outside this range, however, the linearity assumption can yield completely incorrect results; modeling vehicles is no different.

Several authors have noted a limitation of the CRASH3 program in its reduced accuracy for low ΔV collisions.[17,13,23] The data base[19] used to calculate frontal stiffness properties in CRASH3 was composed almost exclusively with data from 30-35 mph frontal barrier tests. It should, therefore, not be surprising that the accuracy of CRASH3 is superior for this type of collision in comparison to low velocity collisions. An important distinction should be made between inadequate data in the vehicle property data base and faulty algorithms. The CRASH3 algorithm for

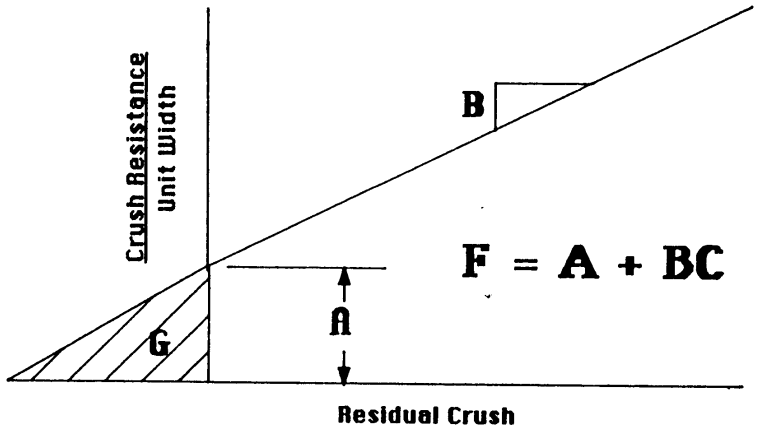

FIGURE 2.3 LINEAR CRUSH RESISTANCE

estimating the energy dissipated during a collision is a sound and useful approach; there will always be, however, a need to update, refine, and expand the vehicle crash test data base on which the crush coefficients, A, B, and G, are based.

The energy dissipated through crushing the vehicle can be approximated by double integration of the linear function described in Figure 2.3.

$$E_i = \int_0^L \int_0^C (A + BC_i)\, dc\, d\ell \text{ in.-lbs} \qquad (2.46)$$

$$E_i = \int_0^{L_i} \left(AC_i + \frac{BC_i^2}{2} + G_i\right) d\ell \text{ in.-lbs} \qquad (2.47)$$

where E_i = Energy absorbed by vehicle i, in.-lb.

$C_i = f(\ell)$ = Residual crush of vehicle i, inches.

L_i = Width dimension of damaged region of vehicle i, inches.

A_i, B_i, G_i = Empirical coefficients of unit width properties obtained from crash test data.

ΔV_i = Velocity change experienced by vehicle i, inches/sec.

ℓ = Width dimension of damaged region, inches.

M_i = Mass of vehicle i, lb-sec^2/in.

Values for A_i, B_i, and G_i, corresponding to the energy absorbed in barrier crashes with "standard" test weights, are stored in Table 1.2, categorized for several vehicle sizes and for the front, side, and rear of each vehicle size. It should be noted that the values in Table 1.2 are based largely on Campbell's[19] and NHTSA data. Actual vehicle weights are used in the solution of equations (2.44) and (2.45).

Figure 2.4 shows the damage dimension format needed to evaulate equations (2.46) and (2.47). CRASH3 assumes, as Figure 2.4 implies, that the damage profile is uniform in the vertical direction.[19] In actual collisions, however, the sill or rocker panel structure is often overidden in side impacts.[17,21] In addition, wheel suspensions represent a much stiffer structure than the sheet metal body structure. These effects are mitigated to some extent because the energy term, E_T, is the sum of the deformation energies of both vehicles.

One notable problem occurs when two stiff structural areas interact. For example, if the point of impact on both vehicles was a wheel or similar hard impacts, energy would be computed because the model is not well calibrated for such

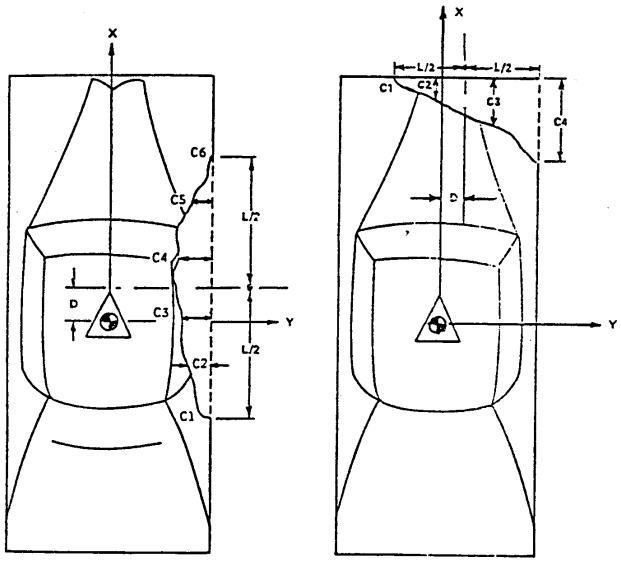

FIGURE 2.4 DAMAGE DIMENSIONS

impacts. Such cases represent another instance where the user must assess CRASH3 results for their "reasonableness."

The three constants, A, B, and G, have real physical meaning.[21] The B coefficient represents the stiffness of the vehicle structure; its units are lb/inch. The coefficient A, in units of force, represents the beginning of plastic deformation. Load increments less than A will cause only elastic deformation, and, hence, no residual crush. The term G is an integration constant which represents the elastic work done to reach a force of A.

Referring again to Figure 2.3, G is defined as the amount of energy required to reach a resisting force of A. This energy is elastic since the residual crush for forces less than A is zero. Presuming the linear relationship between the force and the residual crush is the same for plastic as well as elastic deformations, the elastic deflection required to produce a force of A is A/B. The corresponding energy, G, is therefore the area enclosed by the right triangle in Figure 2.3; or

$$G = \frac{A^2}{2B}$$

All of the foregoing discussion is based on the limitations of the linearity assumption. Nevertheless, it is useful to attach some meaning to these values in order to understand their purpose.

The CRASH3 calculation procedure permits a two, four, or six-point definition of the damage profile. The integration of equation (2.47) is based on trapezoidal approximations of the damage region, as shown in Figure 2.5, yielding the following equations.

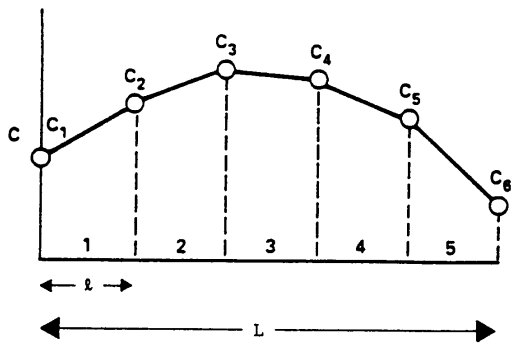

FIGURE 2.5 APPROXIMATION OF DAMAGE PROFILE WITH STRAIGHT LINE SEGMENTS

For the six-point definition of the damage profile shown in Figure 2.5, the following functional relationship exists between extent and width.

$$C = C_1 + (C_2 - C_1)\,\frac{5\ell}{L} \quad \text{for } 0 < \ell \le \frac{L}{5}$$

$$= C_2 + (C_3 - C_2)\left(\frac{5\ell}{L} - 1\right) \quad \text{for } \frac{L}{5} < \ell \le \frac{2L}{5}$$

$$= C_3 + (C_4 - C_3)\left(\frac{5\ell}{L} - 2\right) \quad \text{for } \frac{2L}{5} < \ell \le \frac{3L}{5}$$

$$= C_4 + (C_5 - C_4)\left(\frac{5\ell}{L} - 3\right) \quad \text{for } \frac{3L}{5} < \ell \le \frac{4L}{5}$$

$$= C_5 + (C_6 - C_5)\left(\frac{5\ell}{L} - 4\right) \quad \text{for } \frac{4L}{5} < \ell \le L$$

Integration of equation (2.47) for the above definition of $C = f(\ell)$ yields

$$E = \frac{L}{5}\left\{\frac{A}{2}(C_1 + 2C_2 + 2C_3 + 2C_4 + 2C_5 + C_6) + \frac{B}{6}(C_1^2 + 2C_2^2 + 2C_3^2 + 2C_4^2 + C_5^2 + C_6^2 + C_1C_2 + C_2C_3 + C_3C_4 + C_4C_5 + C_5C_6) + 5G\right\} \tag{2.48}$$

Integration of corresponding functions for four-point and two-point definitions of the damage extent yields the following relationships.

4 POINTS

$$E = \frac{L}{3} \left\{ \frac{A}{2} (C_1 + 2C_2 + 2C_3 + C_4) + \frac{B}{6} (C_1^2 + 2C_2^2 + 2C_3^2 + C_4^2 + C_1C_2 + C_2C_3 + C_3C_4) + 3G \right\} \quad (2.49)$$

2 POINTS

$$E = L \left\{ \frac{A}{2} (C_1 + C_2) + \frac{B}{6} (C_1^2 + C_1C_2 + C_2^2) + G \right\} \quad (2.50)$$

Default calculations of energy are generated using the four-point formula on the basis of column 7 of the Collision Deformation Classification[14] (CDC) and on three "representative" types of damage profiles. These are for the convenience of estimating hypothetical damage problems and should never be used in estimating actual accidents.

The "equivalent barrier speed," as defined by Campbell,[19] is not equal to the speed change, ΔV. In low-speed collisions, the elastic deformation of the vehicle can account for a large portion of the dissipated energy.[21] The total speed change, ΔV, in a completely elastic collision should be equal to twice the impact velocity in the absence of an energy-absorbing bumper device. The coefficient G is intended to represent the amount of energy absorbed by the elastic phase of the collision.

The impact speeds without residual crush that are indicated by Campbell's[19] linear fits (no actual data points at impact speeds below 15 MPH) suggest substantially higher coefficients of restitution than, for example, the values represented by Emori.[18] Without more definitive information on the actual magnitude and variation of the coefficient of restitution as a function of both deflection extent and position on the vehicle periphery, the complexity of introducing a corresponding refinement in the damage analysis technique cannot be justified. Therefore, the damage analysis procedure defined herein tends to underestimate ΔV in low-speed collisions.

2.2.4 Moment Arms of Resultant Collision Force on Vehicles 1 and 2

The moment arms h_1 and h_2 of the resultant force on the two vehicles determine the effective masses acting at those vehicle points that achieve a common velocity at the damage centroid during the collision. Thus, the accuracy of the ΔV results corresponding to given damage patterns is directly affected by the moment arm approximations.

The basis for the procedure is depicted in Figure 2.6, in which the following relationships may be seen to exist. The moment arm, h_1, depends on the assumed location of the average force, which is taken to be at the centroid of the damage area.

(1) Side Contact, Figure 2.6a

$$TEMP1 = Y_S - \left(\frac{1}{N}\right)(C1 + C2 + \ldots C_n) \qquad (2.51)$$

$$h = \left(D^2 + (TEMP1)^2\right)^{1/2} \cos\left\{\arctan\left(\frac{TEMP1}{D}\right) + \alpha\right\}$$

(2.52)

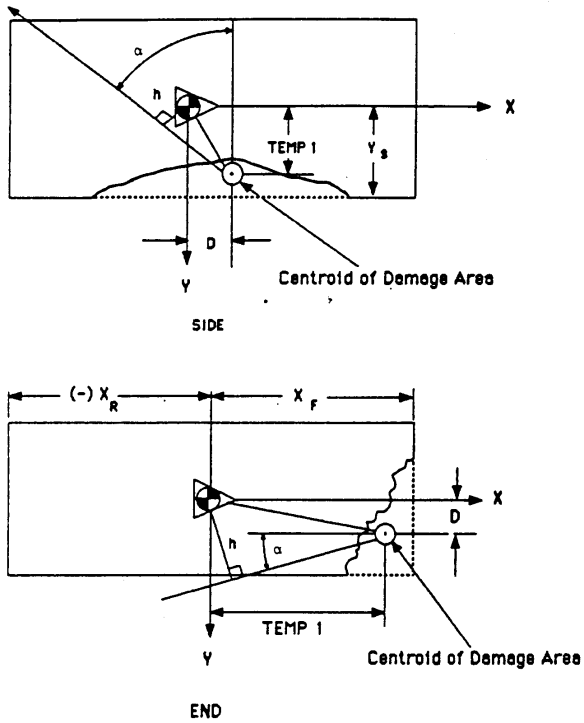

FIGURE 2.6 MOMENT ARMS OF RESULTANT COLLISION FORCES

(2) End Contact, Figure 2.6b

$$TEMP1 = X_F - (\frac{1}{N})\ (C1 + C2 + \ldots\ C_n) \qquad (2.53)$$

or

$$TEMP1 = -X_R - (\frac{1}{N})\ (C1 + C2 + \ldots\ C_n) \qquad (2.54)$$

$$h = D \cdot \cos\alpha + TEMP1 \cdot \sin\alpha \qquad (2.55)$$

The angles α are based directly on either the specified clock directions (columns 1, 2 of CDC) or the supplementary inputs of direction angles of the principal force on the two vehicles. Thus, the user should understand that the direction of ΔV is determined by these input data and not by the program, which only calculates the magnitude of change in velocity, ΔV.

2.2.5 Damage Interpretation in Oblique Collisions Correction Factor for Crush Resistance

The fitted empirical crush characteristics apply to the intervehicle force component perpendicular to the involved side or end. For cases in which the principal force is not perpendicular to the involved side or end, the analytical relationship defining the maximum relative displacement must

make use of the crush resistance and deflection along the line-of-action of the resultant force. In other words, the effective peripheral crush resistance that is used in the derivation of the foregoing equations is in the direction of the resultant force. Therefore, the calculation of absorbed energy must reflect this fact.

If the specified direction of the principal force is assumed to be approximately correct, a corresponding tangential force component must have existed during the deflection. In Figure 2.7, the components of a resultant intervehicle force are depicted. In the figure, it may be seen that

$$F_R = F_N/\cos\alpha \quad \text{and} \tag{2.56}$$

$$C_R = C_N/\cos\alpha \tag{2.57}$$

where F_R = Resultant force.

F_N = Normal force.

C_R = Crush in the direction of F_R.

C_N = Normal crush.

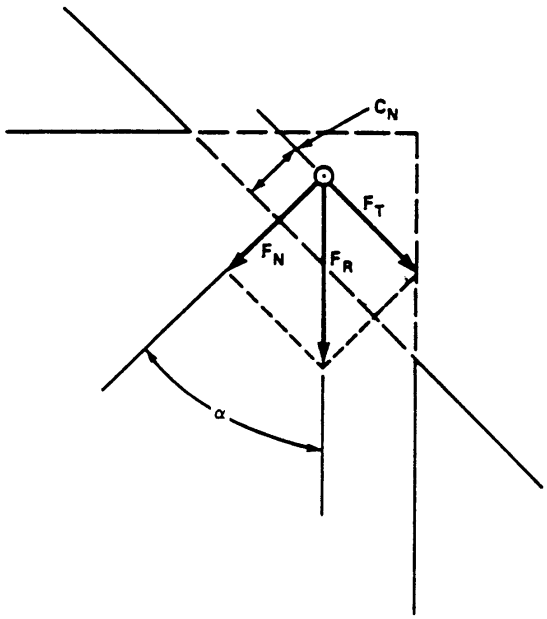

FIGURE 2.7 FORCE COMPONENTS IN OBLIQUE COLLISION

The work done in the direction of the resultant force may be determined from

$$\int_{o}^{C_R} F_R dC_R = (1 + \tan^2\alpha) \int_{o}^{C_N} F_N dC_N$$

(2.58)

Application of (2.58) to the calculation of absorbed energy yields the correction factor, $(1 + \tan^2\alpha)$, for the effective crush stiffness in oblique collisions. Some[17] have claimed that the $(1 + \tan^2\alpha)$ correction factor is much too large, reaching a maximum value of 2.

The tangential force, F_T, however, cannot increase without bound. F_T represents the frictional forces acting perpendicular to the normal force, F_N. The tangential force is given by

$$F_T = F_N \tan\alpha \qquad (2.59)$$

As stated above, F_T, is limited to some maximum value which is given by

$$F_{T\text{-}max} = \mu_f F_N \qquad (2.60)$$

where μ is a coefficient of intervehicular friction. If equations (2.59) and (2.60) are set equal to each other and solved for μ_f, the

following expression results

$$\mu_f = \tan\alpha \tag{2.61}$$

It is to some degree academic to argue about what value of μ is appropriate. What the CRASH3 program implies by limiting α to ±45 degrees is that μ can get no larger than 1. The assumption that the tangential friction force cannot grow larger than the normal force is a reasonable boundary assumption. For this reason, the maximum value of α is limited to ±45 degrees.

2.3 TRAJECTORY ANALYSIS

2.3.1 Alternatives Considered

When sufficient scene evidence exists to identify the final rest and separation positions of the vehicles, CRASH3 attempts to utilize these data to estimate the separation velocity of each vehicle. Knowing the separation velocities, the impact speed can be estimated from momentum considerations, or by simple vector addition of $\Delta V + V_{sep}$. Thus, the principal outcome of analyzing the trajectory data is the separation velocity. This separation velocity is obtained by considering one of three circumstances: (a) rotating skid, (b) non-rotating skid, and (c) rollout. In each of these circumstances, either a straight line or curved (assumed to be a circular arc) path is assumed for the transit from separation (assumed to be point-of-impact) and final rest. Each of these circumstances is described below. Briefly stated, the circumstances are identified by the user's response to Questions 12 and 19 (vehicle skidding) and Questions 17 and 24 (vehicle rotation). Using Vehicle 1 as an example, Questions 12 and 17 apply and the following responses result in one of the three aforementioned circumstances.

Question 12 (Skidding)	Question 17 (Rotation)	Circumstance
yes	yes	Rotating skid
yes	no	Non-rotating skid
no	yes or no	Rollout

2.3.2 Rotating Skid

Marquard[24] defines relationships for approximating the initial linear and angular yaw velocities of a vehicle in a spinout trajectory, the trajectory after separation, on the basis of the energy dissipated during its changes in position and orientation between separation and rest. He includes the cases of freely rotating wheels and of locked wheels, each with the front wheels limited to the straight-ahead position of steering.

In the case of freely rotating wheels, the linear and angular velocities of the vehicle are reduced alternately as the heading direction changes with respect to the direction of the linear velocity. When the vehicle slides laterally, the side forces at the front and rear tires tend to have the same direction despite the existence of a yaw velocity (Figure 2.8a). Therefore, during this phase of the

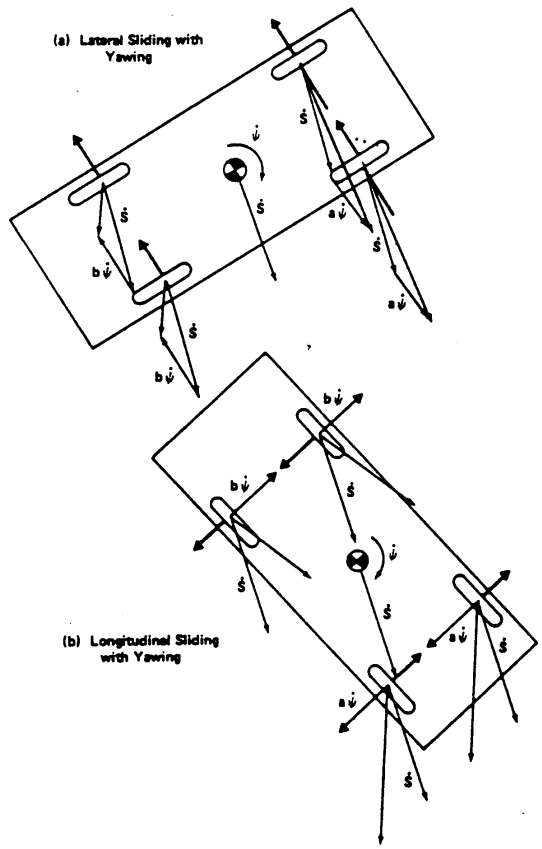

FIGURE 2.8 TIRE FORCES DURING SPINOUT WITH YAWING VELOCITY

motion, the angular velocity tends to remain constant while the linear velocity decreases. When the longitudinal axis is aligned with the direction of the linear velocity, the side forces at the front and rear tires act in opposite directions and the angular velocity decreases while the linear velocity tends to remain constant (Figure 2.8b). A SMAC-generated example of the time-histories of angular and linear velocity, for the case of no braking, is shown in Figure 2.9. Marquard defines a different form of solution for the case of locked wheels, whereby the ratio of angular to linear displacement during the spinout is used to determine empirical coefficients.

The derivation of equations in Marquard[24] is not completely presented. Therefore, some details of the assumptions must be deduced from the final form of the equations.

An idealized plot of the time histories of the linear and angular spinout velocities of a non-braking vehicle are shown in Figure 2.10. The symbols ΔT_1 and ΔT_2 are used to denote the amount of time between vehicle separation and final rest, the time when the respective velocities are zero. The area under each velocity-time curve is the displacement which occurs during the

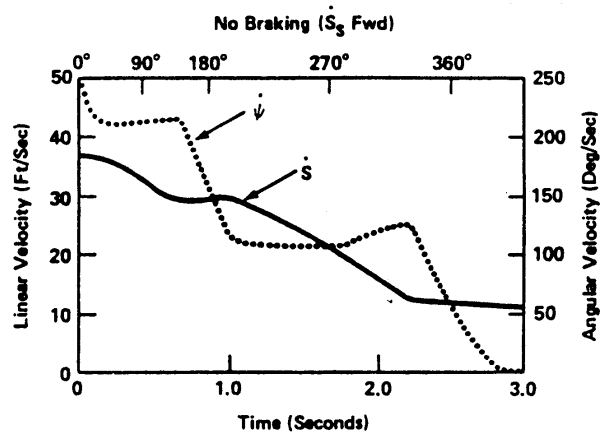

FIGURE 2.9 LINEAR AND ANGULAR VELOCITIES VS TIME

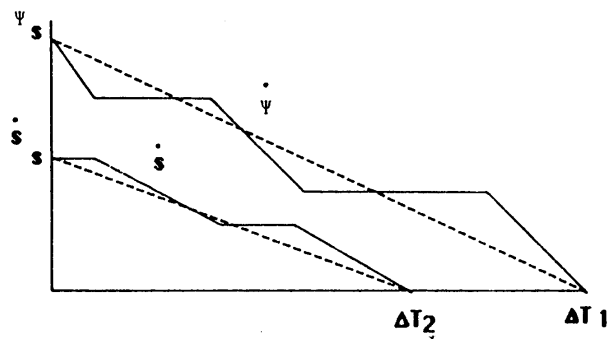

FIGURE 2.10 IDEALIZED PLOT OF VELOCITIES VS TIME

spinout. A visual inspection of Figure 2.10 will illustrate that although the velocity at any time may not be well represented by the idealized curve, the area under the actual and ideal curves is nearly equal. The displacement, which is the measurable variable, is therefore the same for both curves. If it is assumed that the dashed lines approximate the actual velocity curves, the following analyses can be made.

The displacement of the vehicle can be estimated by calculating the areas under the idealized velocity-time curves as

$$\Delta\Psi = \frac{1}{2}\,\dot{\Psi}_s\,\Delta T_1 \qquad (2.62)$$

$$\Delta S = \frac{1}{2}\,\dot{S}_s\,\Delta T_2 \qquad (2.63)$$

The deceleration of the vehicle is caused by tire-ground forces. Assuming that these forces are constant, Newton's second law can be applied as follows to determine the average angular decelerations.

$$\ddot{\Psi}k^2 = \mu g\left(\frac{a+b}{2}\right) \qquad (2.64)$$

where $\ddot{\Psi}$ = Angular deceleration.

k = Radius of gyration.

g = Acceleration due to gravity.

μ = Tire-ground friction coefficient.

$(a + b)$ = Wheel base.

Equation (2.64) can then be solved for the average value of $\ddot{\Psi}$. This value is visually the slope of the idealized angular velocity-time curve in Figure 2.10. The time, Δt_1, required to bring the vehicle to rest can then be calculated as

$$\Delta t_1 = \frac{\dot{\Psi}_s}{\ddot{\Psi}} = \frac{2k^2\dot{\Psi}_s}{\mu g\ (a + b)} \quad , \qquad (2.65)$$

For yaw orientations near that of broadside sliding, the tire side forces, which are perpendicular to the wheel plane, act at a changing angle with respect to the direction of the linear velocity. If the average value of the cosine of the angle during that portion of the motion is taken to be 0.85, the average magnitude of the linear deceleration during periods of linear deceleration can be approximated as

$$\ddot{S} = 0.85\ \mu g \qquad (2.66)$$

The corresponding actual deceleration time of the linear velocity can be approximated by

$$\Delta t_2 = \frac{\dot{S}_s}{\ddot{S}} = \frac{\dot{S}_s}{0.85\ \mu g} \qquad (2.67)$$

As shown in Figure 2.10, the linear and angular velocities alternate; during linear deceleration no angular acceleration occurs and during angular acceleration, no linear deceleration occurs. Thus, we can imagine that, for example, rotation occurs first and then linear deceleration occurs. The times Δt_1 and Δt_2 are the times required for deceleration and therefore do not include the flat parts of the curves in Figure 2.10.

The total time required to stop both the linear and the angular motions can be expressed, from equations (2.65) and (2.67), as

$$T = \Delta t_1 + \Delta t_2 = \frac{2\,\dot{\Psi}_s\,k^2}{\mu g\,(a + b)} + \frac{\dot{S}_s}{0.85\,\mu g} \qquad (2.68)$$

If it is assumed that both phases of the motion end at approximately the same time, $\Delta T_1 \approx \Delta T_2 \approx T$, then from (2.62) and (2.63)

$$\frac{2\,(\Delta\Psi)}{\dot{\Psi}_s} \approx \frac{2S}{\dot{S}_s} \approx T \qquad (2.69)$$

From (2.69),

$$\frac{\dot{S}_s}{\dot{\Psi}_s} = \frac{\Delta S}{\Delta \Psi} \qquad (2.70)$$

Substitution of (2.69) and (2.70) into (2.68) yields

$$\frac{2\,(\Delta\Psi)}{(\dot{\Psi}_s)^2} = \frac{2k^2}{(a + b)\,\mu g} + \frac{\Delta S}{0.85\,\mu g \Delta\Psi} \qquad (2.71)$$

Solution of (2.71) for $\dot{\Psi}_s$ yields the magnitude of Ψ_s

$$\dot{\Psi}_s = \sqrt{\frac{\mu g\,(\Delta\Psi)^2}{\left\{\frac{k^2\,|\,\Delta\Psi\,|}{(a + b)}\right\} + \frac{\Delta S}{1.70}}}$$

(2.72)

Equation (2.72) will yield the magnitude of Ψ_s. The sign of Ψ_s is not preserved because of the square root radical, therefore the user should ensure the correct sign is used.

And using Equation (2.70) to calculate $\dot{S}_s$ yields,

$$\dot{S}_s = 1.70 \left[\frac{\mu g\,(\Delta\Psi)}{\dot{\Psi}_s} - \frac{k^2\,|\,\dot{\Psi}_s\,|}{(a + b)} \right] \qquad (2.73)$$

Equations (2.72) and (2.73) correspond to the relationships defined by Marquard.[24] These relationships were extended to include the case of partial braking, in the following manner.

If the symbol θ is used to define the proportion of full deceleration produced by braking or wheel damage, where $0 \leq \theta \leq 1.00$, a linear deceleration of $0.85\ \mu g$ occurs during Δt_1, the deceleration time of the angular velocity. Since resistance to rotation is caused by tire forces perpendicular to the free rolling direction of the tire, there is no difference in the rotational deceleration when partial braking is present. In other words, Ψ does not depend on θ. The linear velocity to be decelerated in the corresponding phase of motion is reduced to

$$\dot{S}_1 = \dot{S}_s - 0.85\ \theta \mu g \Delta t_1 \qquad (2.74)$$

The total time required for linear deceleration is reduced to

$$\Delta t_2 = \frac{\dot{S}_1}{0.85\ \mu g} = \frac{\dot{S}_s}{0.85\ \mu g} - \theta \Delta t_1 \qquad (2.75)$$

Therefore, the total time required to stop both the linear and the angular motions becomes

$$T = \Delta t_1 + \Delta t_2 = \frac{\dot{S}_s}{0.85\ \mu g} + (1 - \theta)\ \frac{2\ \dot{\Psi}_s k^2}{(a + b)\ \mu g}$$

(2.76)

With the introduction of θ, equations (2.72) and (2.73) become

$$\dot{\Psi}_s = \sqrt{\frac{\Delta\Psi^2 \mu g}{\left\{\frac{\Delta S}{1.7}\right\} + \left\{\frac{(1 - \theta)\ |\ \Delta\Psi\ |\ k^2}{(a + b)}\right\}}}$$

(2.77)

$$\dot{S}_s = 1.70 \left[\frac{\mu g\ (\Delta\Psi)}{\dot{\Psi}_s} - \frac{k^2\ |\dot{\Psi}_s|\ (1 - \theta)}{(a + b)} \right]$$

(2.78)

Application of equations (2.77) and (2.78) to a number of SMAC-generated[16] spinout trajectories revealed several shortcomings. First, it was found that a residual linear velocity frequently exists at the end of the rotational motion. Thus,

equations (2.69) and (2.70) can introduce large errors. Next, it was found that the shapes of the plots of linear and angular velocity versus time change substantially as functions of the initial ratio of linear to angular velocity, affecting the accuracy of simple linear approximations of the areas under the curves. Finally, the transitions between the different deceleration rates in the linear and angular motions do not occur abruptly. Rather, slope changes in the plots of velocities against time occur gradually, producing rounded "corners" in the curves like those in Figure 2.9. As a result of the transitions, the effective deceleration rates in the two modes of motion are somewhat less than those corresponding to the full value of tire-ground friction.

To improve the accuracy of the approximations, provision was made for the introduction of a residual linear velocity at the end of the rotational motion and empirical coefficients, in the form of polynomial functions of the initial ratio of linear to angular velocity. Since the velocity ratio is initially unknown, a solution procedure was developed where several trial values of the ratio, based on an approximate equation, are used to obtain multiple solutions. The solution for which the velocity ratio most closely

matches the corresponding trial value is retained. The residual linear velocity is approximated on the basis of the distance traveled subsequent to the end of the rotational motion.

If α_1 through α_5 are empirical coefficients, the total time required to stop the angular motion can be approximated by

$$T_1 = \alpha_1 \frac{\Delta\Psi}{\dot{\Psi}_s} = \Delta t_1 + \Delta t_2 \qquad (2.79)$$

The actual time of linear and angular deceleration can be rewritten as

$$\Delta t_1 = \frac{2\dot{\Psi}_s k^2}{(a + b)\ \mu g \alpha_2} \qquad (2.80)$$

$$\Delta t_2 = \frac{(\dot{S}_s - \dot{S}_1)}{\alpha_1 \mu g} - \frac{\alpha_3 \theta t_1}{\alpha_4} \qquad (2.81)$$

The change in linear velocity during time T_1, can be approximated as

$$\Delta S_1 = \left(\frac{\dot{S}_s + \dot{S}_1}{\alpha_5} \right) T_1 \qquad (2.82)$$

From (2.79) and (2.82),

$$\alpha_1 \frac{\Delta\Psi}{\dot{\Psi}_s} = \alpha_5 \frac{S_1}{(\dot{S}_s + \dot{S}_1)} \tag{2.83}$$

From (2.79), (2.80), and (2.81),

$$\alpha_1 \frac{\Delta\Psi}{\dot{\Psi}_s} = \frac{2\dot{\Psi}_s K^2}{(a + b)\ \mu g \alpha_2} \left(1 - \frac{\alpha_3 \theta}{\alpha_4}\right) + \frac{\dot{S}_s - \dot{S}_1}{\alpha_4 \mu g}$$

(2.84)

From (2.83),

$$(\dot{S}_s - \dot{S}_1) = \frac{\alpha_5}{\alpha_1} \frac{S_1 \dot{\Psi}_s}{\Delta\Psi} - 2\dot{S}_1 \tag{2.85}$$

Substituting (2.85) in (2.84)

$$\dot{\Psi}_s^{\,2} + B\dot{\Psi}_s + C = 0 \tag{2.86}$$

where

$$B = \frac{\dot{S}_1 \mid \Delta\Psi \mid}{D} \tag{2.87}$$

$$C = \frac{\alpha_1 \alpha_4 \mu g\ (\Delta\Psi)^2}{2D} \tag{2.88}$$

$$D = \frac{\alpha_4 k^2 \mid \Delta\Psi \mid \left(1 - \frac{\alpha_3 \theta}{\alpha_4}\right)}{(a + b)\ \alpha_2} + \frac{\alpha_5 S_1}{2\alpha_1} \qquad (2.89)$$

From (2.84)

$$\dot{S}_s = \dot{S}_1 + 2\alpha_4 \left\{ \frac{\alpha_1 \mu g \Delta\Psi}{2\dot{\Psi}_s} - \frac{\dot{\Psi}_s k^2 \left(1 - \frac{\alpha_3 \theta}{\alpha_4}\right)}{(a + b)\ \alpha_2} \right\}$$

(2.90)

The detailed solution procedure for equations (2.86) through (2.90) is presented in the next section and shown algorithmically in Section 3.4.3. The developed equations reduce to the form of (2.77) and (2.78) when the residual linear velocity is set to zero and the coefficients, α_i, apply to the case of fully locked wheels as well as rotating wheels, eliminating the need for a separate "locked wheel" procedure such as that defined in Marquard.[24]

2.3.3 Estimating Vehicle Trajectories from Scene Evidence

The key to the successful solution of Equations (2.89) and (2.90) is arriving at a reliable estimate of the vehicle's post separation trajectory. This section deals with arriving at such an estimate using the separation and rest coordinates and a point on the curved path of the vehicle. This procedure is almost completely a matter of geometry and thus, though complicated, is straightforward. The following derivation is drawn largely from Hess'[25] explanation of the SPIN2 procedure.

Figure 2.11 illustrates the procedure to be outlined. In the figure and the following text, the letter S will denote the separation point, E the end-of-rotation point, P a point along the curved trajectory, and point R is the end point of linear motion. The first step is to calculate the straight line distance, D_1 along LINE 1 between points S and E. This is given by

$$D_1 = \sqrt{(Y_E - Y_S)^2 + (X_E - X_S)^2} \qquad (2.91)$$

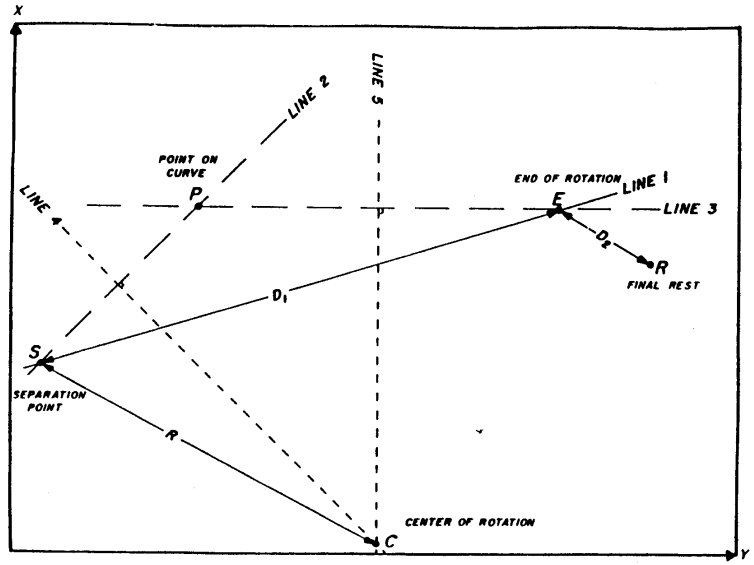

FIGURE 2.11 POINTS ON SPINOUT TRAJECTORY

Next, the perpendicular distance between line 1 and point P, denoted by the symbol d, will be calculated.

$$| d | = \frac{(Y_S - Y_E)\ X_P + (X_S - X_E)\ Y_P + X_S Y_E - X_E Y_S}{D_1} \tag{2.92}$$

If d is less than 1 inch, the post separation trajectory can be considered a straight line and the user can skip ahead to equation (2.103). When determining the coordinates of point P in the field, the investigator should try to select P so that it is nearly equidistant from points S and E. Equation (2.93) is an additional test to see if the trajectory is nearly linear. If the term A is greater than 833 feet, the path can be presumed to be straight and the user can skip to equation (2.103). Equation (2.93) is derived in the appendix of Reference 25.

$$\frac{D^2}{8d} + \frac{d}{2} = A \tag{2.93}$$

The next objective is to find the point about which the vehicle rotated, the center of rotation C. To accomplish this, we must define LINE 4 and LINE 5 in Figure 2.11. LINE 4 is a line perpen-

dicular to the line connecting points S and P and intersecting it at its midpoint. LINE 5 is an analogous line which bisects LINE 3, connecting points P and E. These lines are defined as follows.

$$\text{LINE 4:} \quad X + (B_1)Y + C_1 = 0 \qquad (2.94)$$

$$\text{LINE 5:} \quad X + (B_2)Y + C_2 = 0 \qquad (2.95)$$

where

$$B_1 = \frac{Y_P - Y_S}{X_P - X_S}$$

$$C_1 = \frac{-1}{2} \quad [(X_P + X_S) + B_1 (Y_S + Y_P)]$$

$$B_2 = \frac{Y_E - Y_P}{X_E - X_P}$$

$$C_2 = \frac{-1}{2} \quad [(X_P + X_E) + B_2 (Y_P + Y_E)]$$

We can calculate the coordinates of the center of rotation, C, by finding the point where LINE 4 and LINE 5 intersect. The circle thus defined will pass through points S, P, and E. The coordinates of the center are found by setting equations (2.94) and (2.95) equal and solving for the coordinates as follows.

$$X_C + B_1Y_C + C_1 = X_C + B_2Y_C + C_2$$

$$B_1Y_C + C_1 = B_2Y_C + C_2$$

$$Y_C = \frac{(C_2 - C_1)}{(B_1 - B_2)} \qquad (2.96)$$

and resubstituting Y_C into equation (2.95)

$$X_C = \frac{(B_1C_2 - B_2C_1)}{(B_2 - B_1)} \quad , \qquad (2.97)$$

The radius, R, can then be found from the coordinates of points S and C. Actually, any of the three points P, S, and E should result in the same distance.

$$R = \sqrt{(X_S - X_C)^2 + (Y_S - Y_C)^2} \qquad (2.98)$$

The direction of travel at the point of separation, γ_S, can be calculated next. This is the angle from the X-axis to a line tangent to the circle at point S.

$$\gamma_S = \tan^{-1}\left[\frac{X_S - X_C}{Y_C - Y_S}\right] \qquad (2.99)$$

$$X_C + B_1Y_C + C_1 = X_C + B_2Y_C + C_2$$

$$B_1Y_C + C_1 = B_2Y_C + C_2$$

$$Y_C = \frac{(C_2 - C_1)}{(B_1 - B_2)} \qquad (2.96)$$

and resubstituting Y_C into equation (2.95)

$$X_C = \frac{(B_1C_2 - B_2C_1)}{(B_2 - B_1)} \quad , \qquad (2.97)$$

The radius, R, can then be found from the coordinates of points S and C. Actually, any of the three points P, S, and E should result in the same distance.

$$R = \sqrt{(X_S - X_C)^2 + (Y_S - Y_C)^2} \qquad (2.98)$$

The direction of travel at the point of separation, γ_S, can be calculated next. This is the angle from the X-axis to a line tangent to the circle at point S.

$$\gamma_S = \tan^{-1}\left[\frac{X_S - X_C}{Y_C - Y_S}\right] \qquad (2.99)$$

In like manner, the angle between the tangent at point E and the X-axis, γ_E, can be found.

$$\gamma_E = \tan^{-1}\left[\frac{X_E - X_C}{Y_C - Y_E}\right] \qquad (2.100)$$

The arc length traveled by the vehicle can now be calculated. This is the estimate of ΔS referred to in the previous section. The length of the skid, ΔS, can therefore be calculated as

$$\Delta S = R\,(\gamma_E - \gamma_S) \qquad (2.101)$$

where γ_E and γ_S are in radians. The angular displacement, ΔY, is given by the change in angle between separation and the end of rotation

$$\Delta\Psi = \gamma_E - \gamma_S \qquad (2.102)$$

If equations (2.92) or (2.93) indicated that the path was not curvilinear, equation (2.91) can be used to calculate ΔS and the following equation can be used for calculating $\Delta\Psi$.

$$\Delta\Psi = \tan^{-1}\left[\frac{X_E - X_S}{Y_S - X_E}\right] \qquad (2.103)$$

At this point, the curvilinear portion of the post separation skid has been completely defined. It is possible that at point E, the end-of-rotation point, the vehicle may still have some linear

velocity. Point R in Figure 2.11 represents the final rest position of the vehicle. The vehicle may cease to rotate at point E but continue, in a straight line, to point R. To calculate the linear velocity at the end-of-rotation point, we first must find the distances between points E and R.

$$D_2 = \sqrt{(X_R - X_E)^2 + (Y_R - Y_E)^2} \qquad (2.104)$$

The speed at the end-of-rotation point can then be found from simple dynamics since the only forces acting on the vehicle are tire-ground friction forces.

$$\dot{S}_1 = \sqrt{2g\theta_1\mu D_2} \qquad (2.105)$$

where θ_1 = The average wheel lock-up coefficient. For example, if the right front wheel fully locked, and all others are 10% locked, θ_1 is equal to 0.325.

g = Acceleration due to gravity.

μ = Tire-ground coefficient of friction.

The foregoing analysis would be sufficient in itself if the straight line approximation shown in Figure 2.10 were a good predictor of the velocity-time history. As discussed in the last section, it is necessary to introduce certain empirical coefficients to account for the lack of correspondence between the assumed and actual curves. Since the actual shapes of the curves in Figure 2.10 are, to a large extent, functions of the ratio of linear to angular velocity, which is unknown, it is necessary to utilize several sets of coefficients and select those which match the physical evidence best.

First, a trial estimate of the linear-to-angular velocity ratio, ρ', must be calculated using one of the following equations. If all four wheels are fully locked ($\theta_1 = 1$), the following equation applies

$$\rho' = 1.408 \left[\frac{\Delta S_1}{\Delta \Psi} - 32.0 \right] \qquad (2.106)$$

where ΔS_1 is in inches and $\Delta \Psi$ is in radians. If the value of θ_1 is less than 1.0, equation (2.107) should be used.

$$\rho' = \frac{-b + \sqrt{b^2 - 4ac}}{2a} \qquad (2.107)$$

where $a = 0.000852\ (1 - \theta_1)$

$b = 0.94 - 0.23\ \theta_1$

$c = 40.64 - 8.64\ \theta_1 - \frac{\Delta S_1}{\Delta \Psi}$

The objective of the following steps is to find values for the coefficients α_1 through α_5 which produce a good match with the scene evidence. The value that tests the quality of the match is found using

$$TEST_1 = \frac{\dot{S}_1}{\Delta \Psi \left[1 + 2 \left(D_2 + \sqrt{D_2} \sqrt{D_2 + \dot{S}_1} \right) \right]} \qquad (2.108)$$

Five test values of ρ' are calculated.

$\rho_1 = 0.70\ \rho'$ $\qquad$ $\rho_2 = 0.85\ \rho'$

$\rho_3 = \rho'$ $\qquad$ $\rho_4 = 1.15\ \rho'$

$\rho_5 = 1.30\ \rho'$ $\qquad$ (2.109)

A matrix of α coefficients will now be formed. The matrix has five columns for the five test values of ρ' and five rows for the five

empirical α coefficients. The values of α are calculated using the following algorithm.

For each ρ_j, calculate ρ_{ij}, where

$i = 1,2,3,4,5$

$j = 1,2,3,4,5$

For $0 \leq \rho_j \leq 250$,

$$\alpha_{ij} = a_{i0} + a_{i1}\rho_j + a_{i2}\rho_j{}^2 + a_{i3}\rho_j{}^3 \qquad (2.110)$$

For $250 < \rho_j$,

$$\alpha_{ij} = K_i$$

where

	i				
	1	2	3	4	5
a_0	2.58	0.88	0.2417	0.671	1.223
a_1	-7.44×10^{-3}	-3.92×10^{-3}	4.85×10^{-3}	1.4772×10^{-3}	1.7307×10^{-2}
a_2	-1.504×10^{-5}	8.0×10^{-6}	-9.667×10^{-6}	4.50×10^{-6}	-1.053×10^{-4}
a_3	0	0 0	5.80×10^{-9}	1.993×10^{-7}	
K	1.66	0.400	0.850	0.850	2.08

a_j \ a_i	1	2	3	4	5
1					
2					
3					
4					
5					

The test values for each ρ_i case are calculated using the following equation.

$$TEST_{i2} = \frac{4\alpha_{i1}k\theta_1}{\alpha_{i5}^2\,\alpha_{i2}\,(a + b)} \qquad (2.111)$$

where k = The vehicle's radius of gyration.

(a + b) = Vehicle wheel base.

Equation (2.111) will result in five $TEST_2$ values, one for each ρ' case. If any case has a value of $TEST_2$ which is greater than $TEST_1$, the case is eliminated. If all five $TEST_2$ values are greater than $TEST_1$, the program is aborted. Using equations (2.86) through (2.90), developed in the last section, a value for $\dot{S}_s$ and $\dot{\Psi}_s$ is calculated for each remaining case.

For each of the remaining n cases, calculate

$$D_n = \frac{\alpha_{n4}k\Delta\Psi\left(1 - \frac{\theta_1\alpha_{n3}}{\alpha_{n4}}\right)}{(a + b)\,\alpha_{n2}} + \frac{\Delta S_1\alpha_{n5}}{2\alpha_{n1}}$$

$$B_n = \frac{\dot{S}_1\,|\,\Delta\Psi\,|}{D_n}$$

$$C_n = \frac{\alpha_{n1}\alpha_{n4}\mu g\ (\Delta\Psi)^2}{2D_n}$$

$$\dot{\Psi}_{sn} = \left[\frac{B_n + \sqrt{B_n^2 + 4C_n}}{2}\right] \text{sgn}\ (\Delta\Psi)$$

$$\dot{S}_{sn} = \Delta S_1 + 2\alpha_{n4}\left[\frac{\alpha_{n1}\mu g\Delta\Psi}{2\dot{\Psi}_{sn}} - \frac{|\ \dot{\Psi}_{sn}|\ k^2\left(1 - \frac{\alpha_{n3}}{\alpha_{n4}}\right)}{(a + b)\ \alpha_{n2}}\right]$$

The above equations are identical to equations (2.86) through (2.90) with the exception of the indexing variable n. At this point $\dot{S}_s$ and $\dot{\Psi}_s$ have been calculated for up to five cases. Since the foregoing procedure was based on an assumed value for the ratio of angular to linear velocity, ρ', a check is made to see which case most closely matches the original assumption. To accomplish this, the error in each case is calculated using

$$\beta_n = \rho_n \left| \frac{\dot{\Psi}_s}{\dot{S}_s} \right| - 1 \qquad (2.112)$$

The case with the smallest value of β_n is then selected as the case most closely matching the scene evidence. CRASH3 makes only one pass

through this procedure. However, it would be possible to further improve the convergence of the ρ' estimate by using β_n to select the best ρ_n', and then returning to equation (2.109) and calculating a new set of estimates.

Once the velocities at separation have been calculated, the impact velocity can be computed simply as the sum of the velocity at separation added to the velocity lost in producing vehicle damage.

2.3.4 Adjusting the Separation Angle

In the general case, where a curved trajectory is not specified by the CRASH3 user, it is assumed that the vehicles' centers of gravity move along straight line paths between their separation and rest, or end-of-rotation, positions. While this assumption yields acceptable accuracies of speed approximations based on conservation of linear momentum, it contributes to the large errors in calculations related to conservation of angular momentum. The actual directions of motion of the vehicles at the instant of separation must be accurately defined for angular momentum calculations. When the separation motion of a vehicle includes significant yaw rotation, its

path between separation and rest is generally curved. As a result, the initial velocity vector at separation does not point directly at the rest position.

An empirical relationship can be developed to adjust the initial direction of motion at separation, away from the straight line to rest, as a function of the linear and angular velocities, the total linear and angular displacements and the rolling resistances. Such an adjustment will require no additional inputs by the user. Rather, it will make use of trajectory information already within the SPIN2 subroutine. The results of a reinvestigation of the original 18 SMAC runs, performed in 1975 to guide the initial development of the SPIN2 routine, are presented in Figure 2.12. As previously noted, those 18 SMAC runs involved relatively high linear and angular velocities for separation conditions. Also, the combinations of velocity directions and locked wheel conditions are limited.

In the data display of Figure 2.12, the required adjustment angle for the separation direction is plotted against a simple function of the linear speed-change during rotation, the angular speed change and the corresponding displacements. While

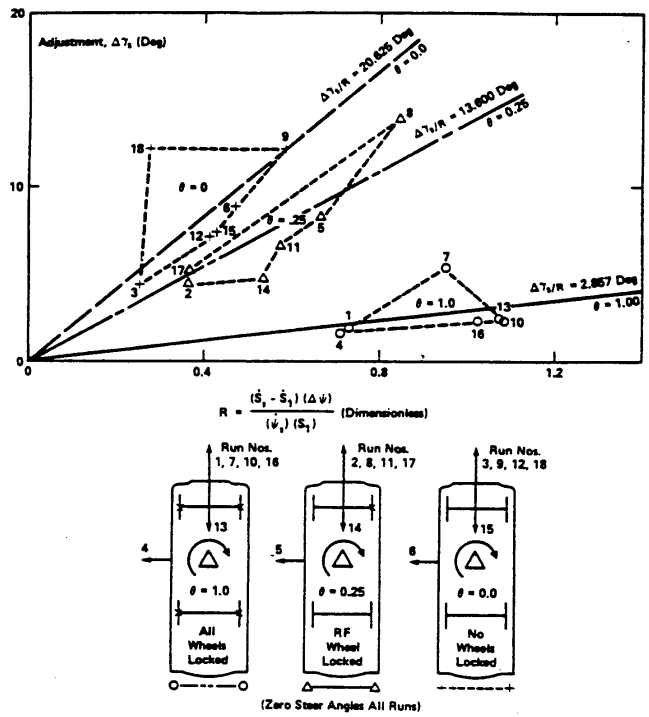

S_1 Ft/Sec	Run Nos.
38.7	1-9
58.7	10-18

$\dot{\psi}_2$ Deg/Sec	Run Nos.
+500	1-6
+250	7-9
+200	10-15
+135	16-18

FIGURE 2.12 ADJUSTMENT OF γ_S USING 18 SMAC RUNS

a relatively large amount of scatter exists in the data points, the general clustering of points corresponding to different wheel-lock conditions shows promise that an empirical function can be defined that will reduce the scatter.

On the basis of data displayed in Figure 2.12, a preliminary method for adjusting the direction of the velocity vector at separation for each vehicle was developed and incorporated in SPIN2.

If it is presumed that the error in the separation angle is primarily a function of wheel lock-up, θ, the following empirical method can be used. The dimensionless term, R, is defined as,

$$R = \frac{(\dot{S}_s - \dot{S}_1)\,\Delta\Psi}{\dot{\Psi}_s S_1} \qquad (2.113)$$

where $\dot{S}_s$ = Separation velocity.

$\dot{S}_1$ = Velocity at end-of-rotation point.

$\Delta\Psi$ = Angular displacement.

$\dot{\Psi}_s$ = Yaw rate at separation.

S_1 = Linear distance to end-of-rotation point.

The adjustment for γ_s was developed empirically based on the 18 SMAC runs shown in Figure 2.12.

$$\gamma_{s\text{-}NEW}=\gamma_{s\text{-}OLD}-(0.240\theta^2-0.551\theta+0.360)(SIGN(R)) \quad (2.114)$$

The above adjustment is not applied in the case where a curved path is specified by the the CRASH user. The fitted relationship is displayed graphically in Figure 2.13. The defined preliminary form of program modification was found to produce improved results from angular momentum solutions. However, the extent of improvement was not as great as expected.

2.3.5 Drag Factor in Non-Rotating Skids

When the vehicle motion between separation and rest occurs with a constant side-slip angle (i.e., angle between vehicle heading and vehicle velocity is constant), the drag force acting on the vehicle is approximated as follows:

The drag force at each tire is not computed, rather a total drag force acting at the vehicle center-of-mass is computed. Steering angles at the tires are also ignored. The retarding force acting parallel to the vehicle heading but in

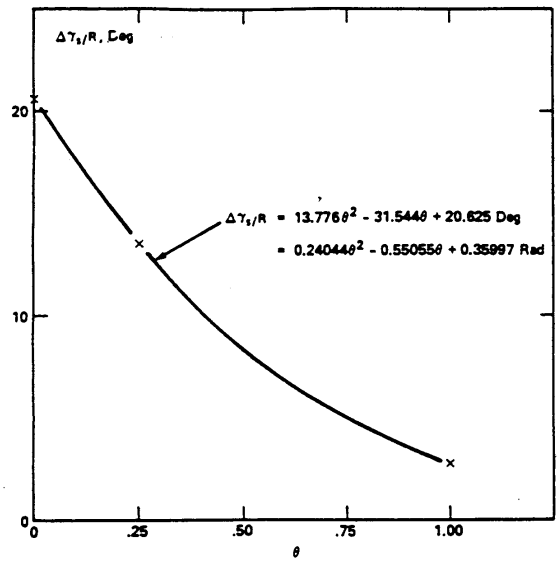

FIGURE 2.13 γ_S ADJUSTMENT VS θ

opposite direction is computed from $\mu W\theta$ where θ is the average wheel lock-up. This is assumed to be one component of the maximum tire force as described in Figure 2.14. Assuming μW acts as described, the orthogonal component $\mu W \sqrt{1 - \theta^2}$ is readily found and these components are then resolved into components along the direction of vehicle velocity. The sum of these components acting opposite to the direction of velocity is called F_s, and is computed from the geometry of Figure 2.14 as

$$F_s = \mu W \sqrt{1 - \theta^2} \sin\alpha + \mu\theta W\cos\alpha \qquad (2.115)$$

Placing this into the form of a "drag factor" we obtain

$$\frac{F_s}{\mu W} = \theta\cos\alpha + \sqrt{1 - \theta^2}\sin\alpha \qquad (2.116)$$

This drag factor is used to compute the speed lost by a vehicle over the path of a non-rotating angular skid. Of course, when the vehicle is tracking $\alpha = 0$, and this expression reduces to the conventional

$$\frac{F_s}{\mu W} = \theta \qquad (2.117)$$

where θ is the average wheel lock-up.

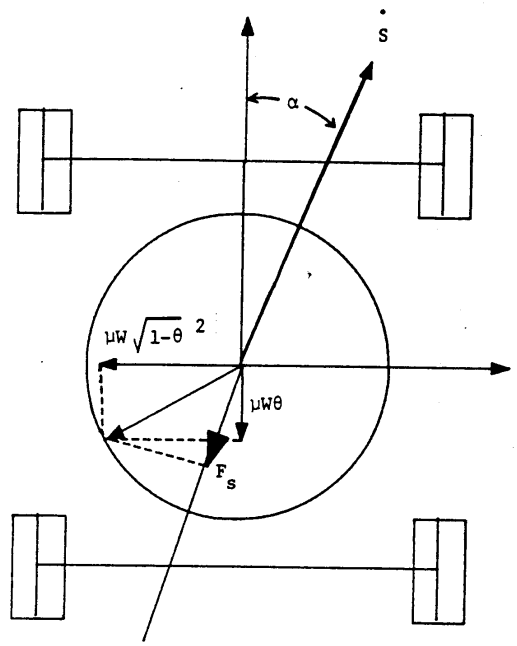

$$F_s = \mu W\left[\theta\cos\alpha + \sqrt{1-\theta^2}\,\sin\alpha\right]$$

FIGURE 2.14 FRICTION CIRCLE FOR ROLLING RESISTANCE AND SIDE FORCES IN NON-YAWING SKID

The above model exaggerates the true tire side force developed at small side-slip angles when the tire side force is not saturated. The error is not considered to be inordinately great when viewed in terms of the convenience of the simple drag factor model. A more rigorous and accurate tire force model is utilized in the trajectory simulation routine discussed later in the manual.

2.3.6 Drag Factor in Rollout

The simplest type of vehicle trajectory occurs when the wheels are tracking. In this condition, the vehicle drag factor can be estimated from a knowledge of the tire-ground coefficient of friction and the fraction (portion) of wheel lockup. Equating this kinetic energy at separation (assumed to have a negligible contribution from rotation) to the work expended by the tire during rollout, one obtains

$$V^2 = 2g\mu fs \qquad (2.118)$$

where s is the rollout distance and f is the average wheel lockup for the vehicle. The average wheel lockup is calculated as the arithmetic mean of the lockup for each individual wheel

$$f = (f_1 + f_2 + f_3 + f_4)/4 \qquad (2.119)$$

where f_1, f_2, f_3, and f_4 are the wheel lockups for the left-front, right-front, left-rear, and right-rear, respectively.

For a particular wheel, f_i,

$f_i = 0$ assumes no wheel friction

$f_i = 1$ assumes full lockup

A more complete description of wheel lockup is in Section 1.4.3 under Questions 27, 28, and 29 on the subject of rolling resistance.

2.4 TRAJECTORY SIMULATION

2.4.1 Introduction

The objective of this program extension has been to test the match of rest position and orientation of other items of trajectory evidence that is achieved in a time-history simulation of the spinout using the SPIN2 values for the separation velocities. A further objective has been to automatically make adjustments, as required, in the separation conditions to improve the evidence match. In particular, the independent variables from SPIN2 consist of the magnitude and direction of the linear velocity at separation ($\dot{S}_s$), the separation orientation (γ_s), and the angular velocity ($\dot{\Psi}_s$). The trajectory evidence consists of up to five separate items. On the basis of discrepancies between the predicted (i.e., time-history simulation) and measured items of trajectory evidence, adjustments of the independent variables are made in up to five iterative steps. Weighting factors are applied to the individual errors, reflecting their relative importance in the overall evidence match. Error calculations are depicted schematically in Figure 2.15.

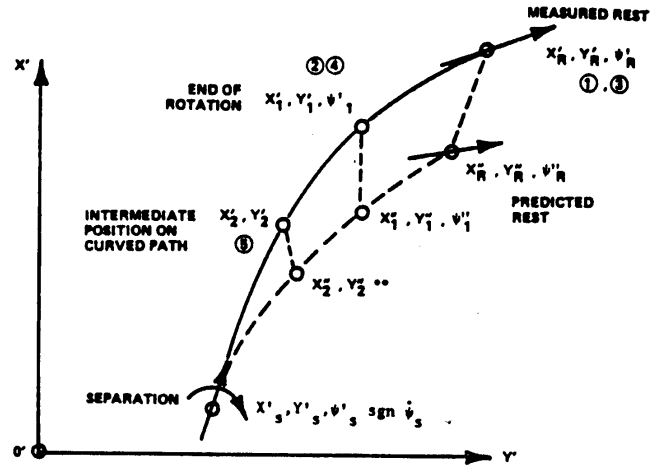

FIGURE 2.15 SCHEMATIC SKETCH OF ERROR CALCULATIONS

Symbols (Refer to Fig. 2.15)

Y'_S, Y'_S, Ψ'_S = Position and heading at separation.

X'_R, Y'_R, Ψ'_R = Measured position and heading at rest.

X'_1, Y'_1, Ψ'_1 = Measured position and heading at end of rotation.

X'_2, X'_2 = Measured intermediate position on curved trajectory.

X''_R, Y''_R, Ψ''_R = Predicted position and heading at rest.

X''_1, Y''_1, Ψ''_1 = Predicted position and heading at end of rotation.

X''_2, Y''_2 = Predicted intermediate position on curved trajectory, determined, for JCRV = 1, in the following manner: At each point in time the distance between the vehicle center of gravity and X'_2,Y'_2 is calculated and compared with the value from previous time increment. The smaller value is retained.

The following are the error terms used to determine if convergence criteria are met. Analytical relationships follow in Sections 2.4.2, 2.4.3, and 2.4.4 to complete correction terms and adjustment factors.

ε_1 = Rest position error.

ε_2 = End of rotation position error.

ε_3 = Rest orientation error.

ε_4 = End of rotation orientation error.

ε_5 = Intermediate position on curved path error.

C_1 through C_5 = Weighting factors applied to the calculated errors.

Error in positions along the spinout trajectories can occur in the form of range and/or azimuth discrepancies; the magnitude of a position error alone does not distinguish between points on a circle around the measured position. In the following the range and azimuth components of position errors are separately calculated and are identified by the symbols γ (azimuth) or ℓ (range) combined with the error number. Orientation errors do not have components. Note that the range error component alone is used to compute ε_1, ε_2, and ε_5.

```
VEHICLE #1                          TRAJECTORY ITERATION #1
US = -139.8   VS = -27.4   PSISD = -1.92   SSDOT = 142.5   GAMS = .04
REST:  373.7   -148.6   2.51    END-OF-ROT:  346.6   -128.6   2.51
POINT-ON-CURVE:  188.4   -48.0
ERRORS:  1.77   1.33   .49   .49   0.00   Q = 3.16   T = 3.30
```

US, VS	= x,y separation velocity components (in./sec); in iteration #1 these will be equal to the SPIN2 results.
PSISD	= Separation angular velocity (rad/sec).
SSDOT	= Magnitude of separation (in./sec).
GAMS	= Separation angle (rad); $\tan^{-1}$ (vs/us).
REST:	= Final rest position of c.g.; x (in.); y (in.), heading angle (rad).
END-OF-ROT:	= Position of c.g. at end of rotation; x (in.), y (in.), heading angle (rad).
POINT-ON-CURVE:	= Position of c.g. at intermediate point on curved trajectory; x (m.), x (in.), y (in.).
ERRORS:	= ε_1 ε_2 ε_3 ε_4 ε_5
Q	= Weighted sum of errors (see Section 2.4.4).
T	= Simulated time (sec) (time-out limit = 16 sec).

2.4.2 Position Errors

(i) Rest Position Azimuth Error

$$\gamma_R = \arctan\left(\frac{Y'_R - Y'_S}{X'_R - X'_S}\right)$$

$$\gamma'_R = \arctan\left(\frac{Y''_R - Y'_S}{X''_R - X'_S}\right)$$

$$\varepsilon_{1\gamma} = \gamma_R - \gamma'_R$$

Form of correction:

$$\gamma_S = \gamma_S + \varepsilon_{1\gamma}$$

(ii) Rest Position Range Error

$$\ell_R = \sqrt{(X'_R - X'_S)^2 + (Y'_R - Y'_S)^2}$$

$$\ell'_R = \sqrt{(X''_R - X'_S)^2 + (Y''_R - Y'_S)^2}$$

$$\varepsilon_{1\ell} = \frac{\ell_R - \ell'_R}{\ell'_R}$$

Form of correction:

$$\dot{S}_s = \dot{S}_s \sqrt{(1 + \varepsilon_{1\ell})}$$

(iii) End-of-Rotation Azimuth Error

$$\gamma_1 = \arctan\left(\frac{Y_1' - Y_s'}{X_1' - X_s'}\right)$$

$$\gamma_1' = \arctan\left(\frac{Y_1'' - Y_s'}{X_1'' - X_s'}\right)$$

$$\varepsilon_{2\gamma} = \gamma_1 - \gamma_1'$$

Form of correction:

$$\gamma_s = \gamma_s + \varepsilon_{2\gamma}$$

(iv) End-of-Rotation Range Error

$$\ell_1 = \sqrt{(X_1' - X_s')^2 + (Y_1' - Y_s')^2}$$

$$\ell_1' = \sqrt{(X_1'' - X_s')^2 + (Y_1'' - Y_s')^2}$$

$$\varepsilon_{2\ell} = \frac{\ell_1 - \ell_1'}{\ell_1'}$$

Form of correction:

$$\dot{S}_s = \dot{S}_s \sqrt{(1 + \epsilon_{2\ell})}$$

(v) Curved Path Azimuth Error

$$\gamma_2 = \arctan\left(\frac{Y_2' - Y_s'}{X_2' - X_s'}\right)$$

$$\gamma_2' = \arctan\left(\frac{Y_2'' - Y_s'}{X_2'' - X_2'}\right)$$

$$\epsilon_{5\gamma} = \gamma_2 - \gamma_2' \quad ,$$

Form of correction:

$$\gamma_s = \gamma_s + \epsilon_{5\gamma}$$

(vi) Curved Path Range Error

$$\ell_2 = \sqrt{(X_2' - X_s')^2 + (Y_2' - Y_s')^2}$$

$$\ell_2' = \sqrt{(X_2'' - X_s')^2 + (Y_2'' - Y_s')^2}$$

$$\epsilon_{5\ell} = \frac{\ell_2 - \ell_2'}{\ell_2'}$$

Form of correction:

$$\dot{S}_s = \dot{S}_s \sqrt{(1 + \epsilon_{5\ell})}$$

2.4.3 Orientation Errors

(i) Rest Orientation Error

$$\varepsilon_3 = \left(\frac{\Psi'_R - \Psi''_R}{\Psi'_R - \Psi'_s} \right)$$

Form of correction:

$$\dot{\Psi}_s = \dot{\Psi}_s \quad \sqrt{(1 + \varepsilon_3)}$$

If $\varepsilon_3 \leq -0.99$, set $\varepsilon_3 = -0.99$

(ii) End-of-Rotation Orientation Error

$$\varepsilon_4 = \frac{\Psi'_1 - \Psi''_1}{\Psi'_1 - \Psi'_s}$$

Form of correction:

$$\dot{\Psi}_s = \dot{\Psi}_s \quad \sqrt{(1 + \varepsilon_4)}$$

If $\varepsilon_4 \leq -0.99$, set $\varepsilon_4 = -0.99$

2.4.4 Iterative Adjustments of Independent Variables

Let A_{ji} = Adjustment coefficient.

C_i = Weighting factor.

If $(\varepsilon_i)_{max} < | \varepsilon_i |$, for any value of i,

$$Q_n = \sum_{i=1}^{i=5} C_i \, | \varepsilon_i | \quad \text{(i.e., weighted sum of errors)}$$

The independent variables are adjusted in the following manner:

$$A_1 = \frac{C_1 A_{11} + C_2 A_{12} + C_5 A_{15}}{(C_1 + C_2 + C_5)}$$

$$A_2 = \frac{C_3 A_{23} + C_4 A_{24}}{(C_3 + C_4)}$$

$$A_3 = \frac{C_1 A_{31} + C_2 A_{32} + C_5 A_{35}}{(C_1 + C_2 + C_5)}$$

$$\left.\begin{aligned} \dot{S}_s &= A_1 \dot{S}_s \\ \dot{\Psi}_s &= A_2 \dot{\Psi}_s \\ \gamma_s &= A_3 + \gamma_s \end{aligned}\right\} \text{New separation values for the next iteration}$$

where A_{ij} are defined as follows:

A_{ji}

i	j=1	j=2	j=3
1	$\sqrt{(1+\epsilon_{1\ell})}$	1.00	$\epsilon_{1\gamma}$
2	$\sqrt{(1+\epsilon_{2\ell})}$	1.00	$\epsilon_{2\gamma}$
3	1.00	$\sqrt{(1+\epsilon_3)}$	1.00
4	1.00	$\sqrt{(1+\epsilon_4)}$	1.00
5	$\sqrt{(1+\epsilon_{5\ell})}$	1.00	$\epsilon_{5\gamma}$

On the basis of a limited number of trial runs, the following values for maximum errors and weighting factors were adopted.

$\epsilon_1 = 0.10 \quad C_1 = 1.0$
$\epsilon_2 = 0.15 \quad C_2 = 0.5$
$\epsilon_3 = 0.10 \quad C_3 = 1.0$
$\epsilon_4 = 0.15 \quad C_4 = 0.5$
$\epsilon_5 = 0.15 \quad C_5 = 0.25$

A schematic flow chart of the interactive loop is shown in Figure 2.16. If the trajectory simulation option is run, the best set of adjusted separation conditions (those yielding minimum Q) will appear in the program output, even if

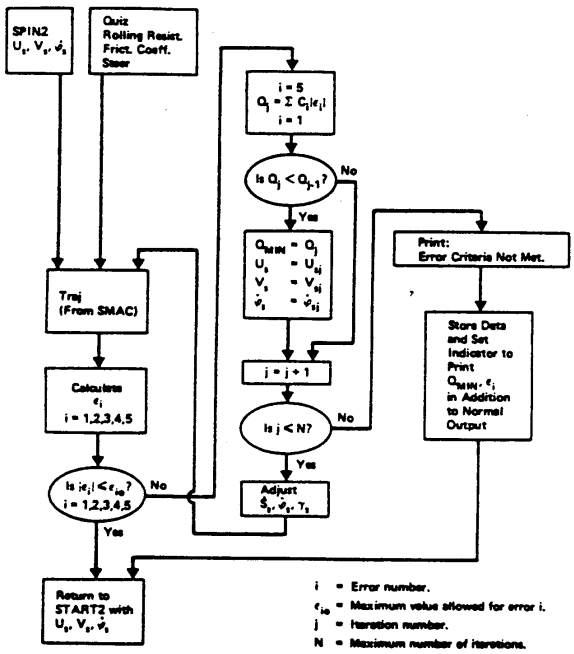

FIGURE 2.16 SCHEMATIC FLOW CHART OF ITERATIVE LOOP

convergence is not achieved. Furthermore, the error terms from this "best" iteration are always included in the complete printout, whether or not convergence was achieved. If the run times-out, exceeding the 16 second time limit for coming to rest, the simulation terminates and no error calculations are made. In such a case, the error values will be identically zero.

When executing a trajectory simulation, the TRAJ subroutine depicted in Figure 2.16 will calculate the trajectory using a set of equations developed for the non-collision phase in the SMAC program. This includes a three-degree-of-freedom model: two degrees of freedom in planar translation and one degree of freedom in rotation about a vertical axis through the center of mass. The only forces in this model are the inertial forces and the tire forces developed at each individual wheel. A complete explanation of this model is found in Reference 26, and a brief summary of the tire force model follows below.

There are two types of forces which typically act on the tires of a vehicle. Circumferential forces, F_C, that act in the vertical plan of the tire and side forces, F_S, that act in a direction perpendicular to the vertical plane of the tire.

Both forces act at the tire-ground interface. Circumferential forces are further classified as braking or tractive forces according to whether the force acts opposite or in the direction of tire velocity over the ground. In the CRASH3 program only braking forces are included and tractive forces are excluded in the circumferential direction. The braking force is computed for each tire from

$$F_{C_i} = \mu W_i \theta_i \cos\alpha_i \qquad (2.120)$$

where the subscript "i" indicates the tire, θ is the fraction of wheel lockup supplied by the user, and α is the side-slip angle for the wheel. The tire side force is calculated by the following model which depends upon the tire side-force shape parameter, β

$$\beta = \frac{c\alpha}{\sqrt{\mu^2 W^2 - F_C^2}} \qquad (2.121)$$

for $\beta < 3$

$$F_S = \left(\sqrt{\mu^2 W^2 - F_C^2}\right) f(\beta) \qquad (2.122)$$

where $f(\beta) = \beta - \frac{1}{3}\beta^2 + \frac{1}{27}\beta^3$

and for $\beta \geq 3$ (maximum side force developed)

$$F_s = \sqrt{\mu^2 W^2 - F_C^2} \tag{2.123}$$

Note that for very small β

$$f(\beta) \approx \beta \qquad \beta << 1 \tag{2.124}$$

and the side force reduces to

$$F_s = c\alpha \qquad \beta << 1 \tag{2.125}$$

where c is the cornering stiffness of the tire.

2.5 ACCURACY AND SENSITIVITY

2.5.1 Introduction

The accuracy of the ΔV estimate given by CRASH3 is without doubt a topic which has garnered much controversy. Several comments should, however, be mentioned as a preamble to the following discussion of accuracy and sensitivity.[13] Sensitivity and accuracy are two completely separate phenomena which will cause variations from the "true" value. Sensitivity refers to errors in measurement or classification which are amplified into erroneous speed estimates. Accuracy reflects an algorithm's ability to produce a correct answer, and, therefore, presupposes that all data are errorless. CRASH3, as will be discussed in the following section, is very sensitive to certain input parameters; small input errors can cause the program to produce completely misleading answers. Although it is easy to discuss what errors are due to sensitivity and what errors are a result of algorithmic inaccuracy, it is often difficult to separate these issues in practice. Errors produced by misapplication and inaccuracies of the algorithm can serve either to exacerbate or mask sensitivity errors.

2.5.2 Sensitivity

Measurement errors are unavoidable. Small measurement or classification errors will, to varying degrees, denegrate the quality of most CRASH3 runs. Smith and Noga[13] investigated the effect of small variations of the crush measurements, vehicle weight, and the principal direction of force (PDOF).

Using actual cases, Smith and Noga[13] calculated the confidence limit on the raw measurements, shown in Table 2.1, where we can be reasonably certain that the measured value is within 5 percent of the actual value. For example, if a crush measurement of 10 inches is reported, we can be confident that the true value is somewhere between 7 and 13 inches. It should be immediately recognized that measurements themselves are just not very accurate.

TABLE 2.1

95 PERCENT CONFIDENCE LIMITS ON FIELD MEASUREMENTS

(from Smith and Noga[13])

Parameter	95% Confidence Limits
$C_1 \ldots C_6$	±3.0 inches
D	±3.5 inches
L	±6.0 inches
PDOF	±20 degrees

Given these confidence limits, Smith and Noga then explored the effect on the ΔV calculated by CRASH3. Table 2.2 shows the effect of varying three input parameters: PDOF, C, and the vehicle mass. In seven of the eighteen collisions studied, the PDOF contributed over 90 percent of the error in sensitivity observed. This suggests that poor PDOF estimates alone can result in very high errors, on occasions in excess of twenty percent.

TABLE 2.2

CONTRIBUTION TO DELTA-V SENSITIVITY FROM VARIATION IN FIELD MEASUREMENTS

(from Smith and Noga[13])

	Sensitivity* (95 Percent Confidence Limits)	Percent Contribution to Sensitivity		
		PDOF	$C_{1 \cdots 6}$	MASS
HIGH DELTA-V RANGE (25-30 MPH) TWO-VEHICLE ACCIDENTS:				
Front-Front	.095	98	1	1
Front-Side	.144	86	10	4
Side-Front	.204	98	1	1
Back-Front	.092	97	2	1
Front-Back	.113	88	6	6
SINGLE VEHICLE ACCIDENTS:				
Front-Fixed Object	.168	46	53	1
Side-Fixed Object	.090	9	75	16
Other-Fixed Object	.247	94	4	2
Other-Single Vehicle	.092	45	52	3
MEAN**	.137	79	19	2
LOW DELTA-V RANGE (10-15 MPH) TWO-VEHICLE ACCIDENTS:				
Front-Front	.141	97	2	1
Front-Side	.191	85	13	2
Side-Front	.230	96	3	1
Back-Front	.163	98	1	1
Front-Back	.133	41	54	5
SINGLE-VEHICLE ACCIDENTS:				
Front-Fixed Object	.163	14	85	1
Side-Fixed Object	.147	11	88	1
Other-Fixed Object	.161	79	20	1
Other-Single Vehicle	.254	72	28	< 1
MEAN**	.178	70	28	2

* Expressed as a fraction of the ΔV.
** Weighted by the population distribution in Table 2.

As has been discussed in Chapter 1, the PDOF is at best a difficult quantity to estimate. Table 2.2 shows that it is also a parameter which is critical in achieving good results. Two specific suggestions for minimizing sensitivity errors in general and errors caused by inaccurate PDOF values in particular are: (1) great care in field measurements and (2) making several CRASH3 runs using small input data variations. The first suggestion is obvious; the second is frequently overlooked. Often CRASH3 users only execute one or two runs for an accident case. The user should in fact use many runs for a single case. Using the field-estimated PDOF and varying the angle to see what effect it has in a particular case will often help establish reasonable bounds to the problem. Changing the PDOF by as little as 5 degrees can often make the difference between a case running or being aborted by the program. If a particular value of the PDOF causes unreasonable answers, the investigator should try a slightly different value to see if the solution will converge to a more believable value.

The sensitivity of the PDOF also indicates that the "optional" actual PDOF in question 3 should always be input since the clock PDOF is only a very rough (i.e., to the nearest 15 degrees)

indication of the actual force direction. Significantly different answers can be obtained; for example, an actual PDOF of 344 degrees and 316 degrees could both be coded as 11 o'clock. Table 2.3 illustrates the sensitivity of the ΔV estimate using a simple numerical example. If the estimated PDOF values are in error by only 5 degrees, the resulting speed estimate will be in error by 11.8 percent.

TABLE 2.3

A NUMERICAL EXAMPLE OF THE SENSITIVITY OF ΔV TO THE PDOF

	Actual	Reported
PDOF Vehicle 1	50	45
PDOF Vehicle 2	10	15
α	40	30
$\Delta V = \sqrt{(1 + \tan^2\alpha)f(E)}$	$1.31\sqrt{f(E)}$	$1.15\sqrt{f(e)}$

where f(E) is a function of the energy, E, as defined by equation (2.44)

ERROR = (1 - 1.15/1.31) = 11.8%

Substitutes page 2.100 If the investigator's estimate of PDOF differs from the nominal clock positions (i.e., 0, 30, 60, 90, 120 etc.), undesirable error is introduced. The sensitivity of the delta-V result to this angle depends upon the orientation of the PDOF to the vehicle surface normal, α, and (in 2-vehicle crashes) upon the magnitude of energy absorbed by each vehicle. The result is most sensitive to direction of force at angles, α, of 45 degrees (see Section 2.2.5). It is insensitive to changes in direction when exceeds 45 degrees because the energy calculation does not change for angles, α, greater than 45 degrees. To give some understanding of how this angle influences the estimated result for delta-V, imagine a simple single-vehicle impact with a fixed object that results in a CDC of 01FYEW3. (In a single vehicle impact the level of absorbed energy does not effect the error introduced by erroneous PDOF.) Any direction of force between 15 and 45 degrees would be eligible for coding in the 01 o'clock sector. Of course if the PDOF was in the direction of 30 degrees from the longitudinal axis of the vehicle, the CDC clock direction of 1 o'clock would translate to the

correct angle of 30 degrees, and no error occurs. If the field inspection indicated that the PDOF was 15 degrees; entry of the 01FYEW3 CDC without correction would result in an estimate of delta-V that is 11.5 percent high. If the field inspection indicated that the PDOF was 45 degrees, an uncorrected entry of 01FYEW3 would give a delta -V estimate that is 18.3 percent low. The magnitude of error is larger for the 45- degree example than is the error for the 15- degree example even though either case results in an error of 15 degrees from the nominal 30 degrees associated with the 01 o'clock sector. In a two vehicle impact, similar results are obtained when the PDOF to each vehicle is in error by these amounts.

continues 2.100

Selecting a vehicle category was another source of sensitivity errors investigated by Smith and Noga. Table 2.4 shows the effect on the ΔV estimate of changing the A and B coefficients of equations (2.48) through (2.50) by 10 percent. These errors can occur as a result of selecting the wrong vehicle category or because a particular vehicle may not fit into the correct category well. For example, if two vehicles appear in the same stiffness category yet their actual stiffnesses differ by ten percent, the error in the ΔV estimate could be as high as 6.7 percent, although the user chose the correct category.

TABLE 2.4

PERCENT CHANGE IN ΔV FOR A 10 PERCENT CHANGE IN THE COEFFICIENTS A AND B

(from Smith and Noga[13])

Vehicle Damage and Type Accident	Percent Change in ΔV
Front Damage; Head-on Impact	2.6
Front Damage; Side Impact	4.1
Side Damage; Side Impact	0.9
Front Damage; Rear-end Impact	1.8
Back Damage; Rear-end Impact	3.2
Front Damage; Fixed Object Impact	6.7
Side Damage; Fixed Object Impact	5.0

The foregoing discussion illustrates the great importance of careful data collection and range checking. It is, of course, impossible to elimate all sensitivity errors. It is possible, however, to minimize them using precise standardized measurement techniques and to explore the sensitivity of a particular case to certain input values. The PDOF is a particularly important variable; yet it is, at best, an educated guess. The user should experiment with the PDOF angle and

any other questionable variables to assess the boundary limits of the problem and achieve some degree of confidence in the solution.

2.5.3 Accuracy

Smith and Noga[13] define accuracy to be "how well the model predicts the desired result if perfect data are used." As the previous section on sensitivity implied, obtaining perfect data is extremely difficult. The results of 27 selected staged collisions involving 53 vehicles were deemed perfect enough by Smith and Noga to use for assessing the accuracy of CRASH3. Figure 2.17 shows the results of this comparison where the CRASH3 ΔV estimate is plotted on the horizontal axis and the actual ΔV is plotted on the vertical axis. If the program predicts the true value exactly, then the point will fall on the dashed 45 degree line. A similar graph is shown in Figure 2.18 using data obtained from Wooley.[17] Both figures are at first discouraging.

The user should at this juncture recall that the CRASH3 program was not designed to be a simulation program but rather a consistent, uniform method of judging accident severity in terms of the change in velocity. CRASH3 should be statistically valid

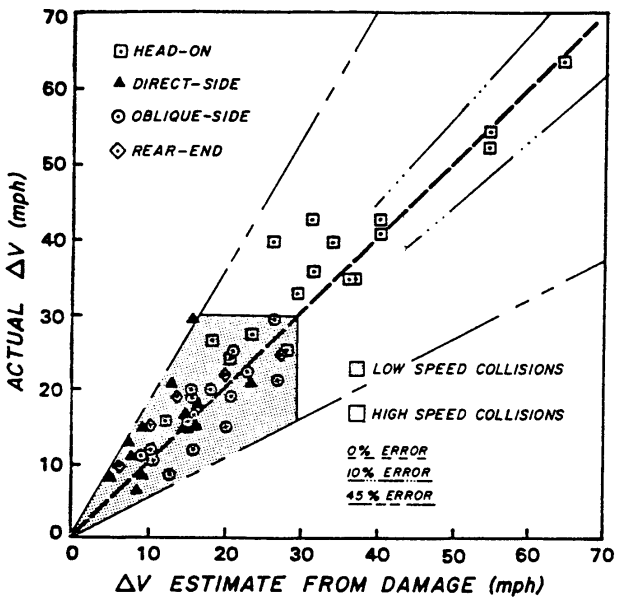

FIGURE 2.17 COMPARISON OF TRUE VERSUS CRASH3 DAMAGE ESTIMATES OF ΔV FOR 53 STAGED COLLISIONS (after Smith et al[13])

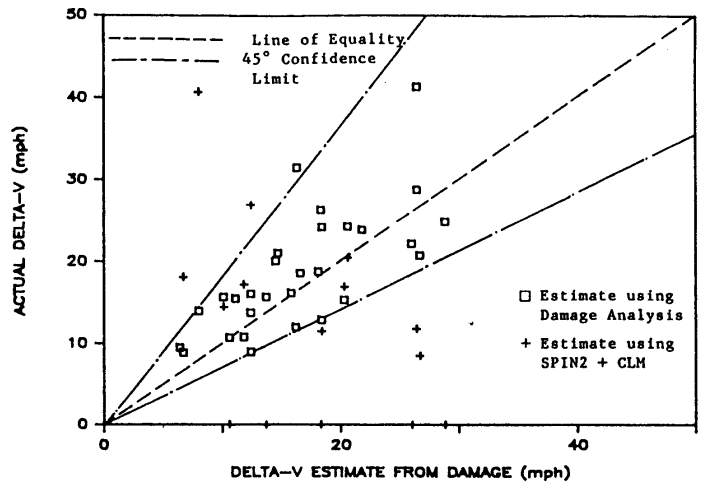

FIGURE 2.18 COMPARISON OF TRUE VERSUS ESTIMATED ΔV FOR 16 STAGED COLLISIONS (after [Wooley et al])

for a large number of cases;[13] it may or may not provide accurate results in a <u>particular</u> case.

Smith and Noga performed a linear regression analysis and developed the following regression equation.

$$\Delta V_{True} = -0.7 + 1.1\ \Delta V_{CRASH} \qquad (2.126)$$

Equation (2.126) indicates that the mean value of a large number of estimates of ΔV will be approximately 10 percent lower from the true mean. Viewed for particular cases, the prediction may be in error by as much as 45 percent. This should reinforce earlier statements that CRASH3 should only be used with caution for individual accidents.

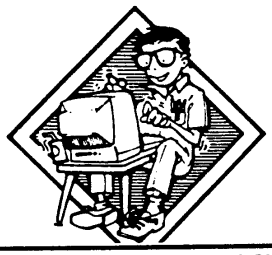

CHAPTER 3 PROGRAMMER'S GUIDE

3.1 INTRODUCTION

CRASH3 is an interactive accident analysis program which is available for usage on several types of mainframe and personal computer systems. This portion of the CRASH3 Technical Reference is intended to provide information required for installation, maintenance, and debugging of the CRASH3 program on the user's particular computer system.

3.2 MAINFRAME COMPUTER SYSTEMS

3.2.1 Source Language

The mainframe CRASH3 program was developed in IBM FORTRAN IV, G-Level compiler language. CRASH3 coding is quite close to ANS FORTRAN, but certain features such as enclosing literals within apostrophes, and dimensioning within a type specification depart from the traditional ANS FORTRAN construct. This is no hindrance since most versions of FORTRAN IV allow usage of these techniques. CRASH3 can also be compiled on the IBM FORTRAN IV H-Level optimizing compiler which will reduce run costs at the penalty of increased storage requirements.

Three input/output units must be defined for the CRASH3 program as summarized in Table 3.1.

3.2.2 Storage Requirements

CRASH3 is a very large program. While the analytical techniques are simple, data checking and "idiot-proofing" account for most of the code. Also, the timesharing and batch processing versions are merged to give the advantage of one single program to install and maintain.

As a result, the CRASH3 program requires more than 180K bytes of storage on an IBM System/370 computer. This is not an unreasonable size for a batch processing application of the CRASH3 program; but on the Calspan TSO timesharing service, this load module will not fit in a 256K byte timesharing region. The only recourse is to overlay the program, which reduces its effective size to about 100K bytes. Figure 3.1 is a layout of the CRASH3 program in overlay and non-overlay setups. This figure does not show all subroutines and is for illustrative purposes only. The overlay technique is ideal for this program since CRASH3 has no loops or extensive iterations that could contribute to disc swapping overhead expense.

TABLE 3.1

CRASH3 INPUT/OUTPUT REQUIREMENTS

FORTRAN Input/Output Unit	Purpose	Record Length	Suggested Block Size	Equipment for Timesharing Usage
5	data input	80	3120	terminal
6	program output and messages	80	3120	terminal
7	program output (SMAC data cards)	80	1600	terminal file card punch

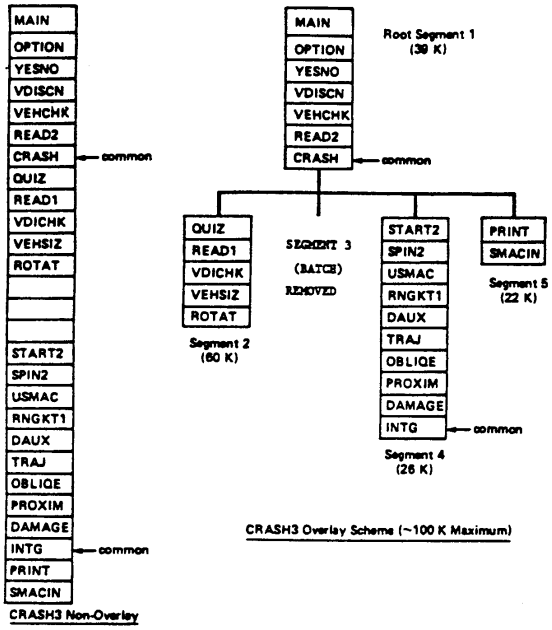

FIGURE 3.1 LAYOUT OF CRASH3 PROGRAM
(NON-OVERLAY AND OVERLAY METHODS)

Users trying to install the program on a computer with restricted region size, such as a minicomputer, might consider tailoring the program to their particular needs. For example, the trajectory simulation capability can be removed by dropping the questions concerning it in Subroutine QUIZ, removing the appropriate subroutine calls to it in Subroutine SPIN2, and then removing the trajectory simulation routines USMAC, RNGKT1, DAUX, and TRAJ. Lastly, while it would require some work, Subroutine QUIZ, which asks the idiot-proofed questions, is virtually straight-line programming and is thus a candidate for overlay management.

As an aid to those users attempting to create an IBM System/370 overlay load module, Figure 3.2 shows the job control language required. In the example of Figure 3.2, LINK is a cataloged procedure that executes the link editor programmer; the 'OVLY' term in the parameter list requests the overlay feature. The "INCLUDE LOADLIB (CRASH3)" statement identifies the module that has all the component parts, while "MEMBER=CRASH30" identifies the name of the final overlay module.

```
//   EXEC LINK, PARM.LKED='LIST,MAP,LET,ONLY',MEMBER=CRASH30
//LKED.SYSIN  DD  *
  ENTRY MAIN
  INSERT MAIN, OPTION, YESNO,VDISCN,VEHCHK,READ2,CRASH
  OVERLAY ONE
  INSERT QUIZ,READ1,VDICHK,VEHSIZ,ROTAT
  OVERLAY ONE


  INSERT START2,SPIN2,USMAC,RNGKT1,DAUX,TRAJ,OBLIQE,PROXIM,DAMAGE,INTG
  OVERLAY ONE
  INSERT PRINT,SMACIN
  INCLUDE LOADLIB(CRASH3)
/*
```

FIGURE 3.2 JOB CONTROL LANGUAGE TO OVERLAY CRASH3 PROGRAM

3.2.3 Compilation

Users are advised to compile the CRASH3 program in pieces--few computer systems offer a large enough region size to compile 4000 lines of FORTRAN code in one pass. Calspan experience is that a box and one-half at a time is best, which is about the size of the QUIZ subroutine. This will require a region size of about 800K bytes on an IBM computer system.

3.2.4 Subroutines Required

CRASH3 consists of a main program, subroutines, and two named commons. Except for the usual FORTRAN-supplied trigonometric and mathematical function subroutines, no other special subroutines are required.

3.2.5 Executing the Program

The IBM System 370 TSO timesharing service provides a good example of CRASH execution. To run the interactive version of the CRASH3 program, a file called "CLIST," for example, must be set up. Figure 3.3 lists the "CLIST" used on a typical TSO system. The programmer is referred to the appropriate IBM TSO manuals. CRASH30 is the

```
00010 TERMINAL NOLINES LINESIZE(80)
00020 DELETE 'LCJY.SMACDATA.DATA'
00030 FREI DA(LCJY.SMACDATA.DATA') ATTR(DCB1)
00040 ATTR DCB1 LRECL(80) BLKSIZE(1600) RECFM(F B)
00050 ALLOC FILE(FT07F001) DA('LCJY.SMACDATA.DATA')
      NEW SPACE(1 1) TRACKS USING(DCB1)
00060 CALL'LOADLIB(CRASH30)'
00070 END
```

NOTE: This file should be loaded into command procedure library as member "CRASH3"

FIGURE 3.3 COMMAND PROCEDURE FOR INTERACTIVE CRASH3

3.3 PERSONAL COMPUTER SYSTEMS

3.3.1 Introduction

CRASH3 is also operational on an IBM-PC or compatible.[29] There are very few functional differences between the two versions, and these differences have been discussed previously in the User's Manual. The PC version will run on either the IBM-PC/XT or the IBM-PC and other compatible systems with at least 256K of RAM and using MS-DOS.

Section 3.3.3 describes the graphics program CRGRAF which has been developed to provide the user with a graphical representation of the trajectory of the vehicles. The graphics program can be run on a case for which a regular CRASH3 run has been completed. The trajectory is based on data that are saved when CRASH3 is executed. In order to run the CRGRAF program, which produces displays of the reconstructed trajectories, a color/graphics board must be installed in the system.

3.3.2 Installation and Execution

The files on the program diskette containing the CRASH3 program should be copied onto a hard disk, preferably in a separate directory. For a two-floppy disk system, the program diskette should be copied onto a backup diskette. If the original program diskette is put in drive A and if the hard disk is represented by the letter C, the following command will copy the files onto the hard disk.

```
COPY A:*.*  C:[ SUBDIR ]  (where SUBDIR is the
                          optional subdirectory
                          in which the CRASH3
                          files may be main-
                          tained)
```

The CRASH3 program diskette contains the following files:

1. CRASH3.EXE --- the microcomputer version of CRASH3
2. CRASH3.MSG --- the data file of messages used by CRASH3
3. CRGRAF.EXE --- the graphics program to be used with CRASH3 to view the estimated trajectories and damage patterns

To begin the CRASH3 program from MS-DOS, the user should enter command

[drive letter:]CRASH3

If the program is on the default drive, the drive letter is optional.

The file CRASH3.MSG must be on the default drive. If the program cannot find it on the default drive, the following message will be provided:

```
THE FILE CRASH3.MSG CANNOT BE FOUND ON THE
DEFAULT DRIVE
ENTER NEW DRIVE LETTER:
```

The user should enter the letter of the disk drive on which the file is currently residing. The program requires this file to produce the long version of the questions and some other messages.

The user may obtain a printout of all input entered and output generated by pressing the CTRL and the PRTSC keys at once. This should be done before the program is executed.

After an introductory message, the program will present the first question:

```
ENTER TYPE OF CRASH RUN?
(COMPLETE,ABBREVIATED,RERUN,PRINT,SMAC, OR
END):
```

This is the same question and menu options as that given at the beginning of the mainframe version of CRASH3. The COMPLETE and ABBREVIATED options are unchanged from the mainframe version. The differences in the operation of the other functions are given below:

When RERUN is selected, the program will present the following questions:

```
ENTER SOURCE OF INPUT FOR CRASH3 RERUN:
  1.  INTERACTIVE (FROM KEYBOARD)
  2.  DISK FILE

  ENTER NUMBER:
```

The user should enter the number 1 or 2. If the interactive format is selected, the program presumes an initial run of CRASH3 has been performed. Otherwise the program returns to main menu. If the disk file is selected, the program will ask:

```
ENTER INPUT FILE NAME (CRASH):
```

The user should enter the name of an existing input file with a name of up to eight characters (no special characters). The name can be prefixed by a drive letter and a colon. If a simple RETURN, without any name, is entered, the default name of CRASH will be used. If the user entered name does not exist on the disk, an error message is given and the user is asked to reenter the file name. The input file name will always have an extension of .GRF. Such an input file has to be created in a previous run of CRASH3, using the complete or abbreviated options.

For the COMPLETE, ABBREVIATE, or RERUN options, the program proceeds to ask a set of questions in the same manner as in the original CRASH3. Once the question and user-answer part is concluded, the program will ask the question:

```
DO YOU WANT TO SAVE INPUT ---
(FOR A RERUN OR FOR RUNNING THE GRAPHICS PROGRAM)
ANSWER (Y OR N):
```

If the user wishes to rerun the current CRASH3 case at a later time, Y should be entered. If the user wants to run the CRGRAF program to display the estimated trajectories, then the data should also be saved. If a Y is entered, the program will ask for the file name:

ENTER FILE NAME FOR SAVING INPUT DATA (CRASH):

The user should enter the name of a file of up to eight characters. The name can be prefixed by a drive letter and a colon. If a simple RETURN, without any name, is entered, the default name of CRASH will be used and the file will have an extension of .GRF.

The print option is slightly different from the mainframe CRASH version. After the option is entered, the program will query:

```
ENTER DESTINATION FOR PRINT OUTPUT:
  1.  PRINTER
  2.  DISK FILE

  ENTER NUMBER
```

If 1 is entered, the output will be routed to the printer attached to the PC. The user must ensure that the printer is available. If the program is unable to print because of an incorrect printer setting, it will print on the screen the following message:

```
PRINTER NOT YET AVAILABLE
RERUN PROGRAM WITH CORRECT PRINTER SETTING
```

If the user desires printed output, the CRASH3 program should be rerun, with printer properly attached.

If the second choice is entered (2), the printout will be saved on a disk file. The program will query the user for a file name:

ENTER FILE NAME TO SAVE PRINT FILE (CRASH):

The user should enter the name of a file of up to eight characters. The name can be prefixed by a drive letter and a colon. If a simple RETURN, without any name, is entered, the default name of CRASH will be used. This file will always have an extension of .PRT. The user can print out this file at a later time using the system utilities.

If the user has a serial printer attached to his system, the following command has to be given from MS-DOS before starting the CRASH3 program. After inserting the MS-DOS diskette in drive A, enter the following lines:

1. A:MODE COMMx:baud,parity,length,stop bits

The user should check the printer setting and the DOS manual to identify the values of the

parameters in the above command. The value of x is 1 or 2, depending on which serial port is attached to the printer.

2. A:MODE LPT1:=COMx:

The above command will route the output to the serial port identified by x.

3.3.3 CRGRAF Graphic Program

The graphics program CRGRAF estimates the trajectories of the vehicles based on the scene data saved from a CRASH3 run. Thus, for an accident case, the CRASH3 program has to be run first and the input data saved. Also, the PC must be equipped with a color monitor equipped with a graphics board or a monochrome monitor with an IBM-PC compatible color/graphics board and software in order for the program to work.

The graphics program CRGRAF is run by entering the command:

[drive letter:]CRGRAF

where drive letter is the letter of the disk drive on which the CRGRAF resides, if it is not the default drive.

For the IBM PC-XT or AT and similar micro-computers, the program may be copied from the diskette onto the hard disk and executed from there. It is advisable to allocate a separate directory for all the CRASH3 related programs and data files. The user should copy the file CRGRAF.EXE from the program diskette into the appropriate directory. To execute the program from the hard disk the user changes the directory to the one containing the CRGRAF program and simply enters the command:

CRGRAF

After the program header, the first message that appears is:

ENTER RETURN TO CONTINUE (? FOR MORE INFO)---

The user should hit the RETURN key to continue with the program. If a question mark is entered, the program will provide a description of the method used to estimate the vehicle trajectories.

The first question presented to the user is:

ENTER NAME OF INPUT FILE (CRASH):

The user should enter the name of the file which contains the data written by the CRASH3 program in a previous run. The name can be up to eight characters, and an optional drive letter with a colon after the letter can precede the name. The extension is always .GRF. If such a file does not exist on the designated drive, then the following message appears:

NO SUCH FILE ON DRIVE---PLEASE REENTER

After a legitimate file name is given, the program reads the necessary input from the file. For users executing the program from the hard disk, the data file should be either in the current directory or on the floppy diskette which is in the disk drive.

The program begins the trajectory calculations, and the user is asked merely to enter a RETURN, at appropriate places, to continue with the processing. The trajectory is calculated based on the impact position and rest position, and optionally an intermediate position.

After completing an estimate, the program asks the user if another estimate is desired.

DO YOU WANT TO REPEAT TRAJECTORY CALCULATION (Y/N)?

If the final position attained from the estimate is close enough to the actual rest position, then the user can move on to the next step. Otherwise, the user can ask for another trajectory calculation. The user may request as many trajectory calculations as he desires. Also, if the final linear velocity or angular velocity remains high, the trajectory calculation should be repeated. Calculation of each estimate takes about one minute, and four or five estimates are usually sufficient to get a reasonable trajectory for a vehicle. Each additional iteration will generally make the final point on the trajectory come closer to the rest position; however, in some cases, the point may begin to diverge. When the final trajectory is calculated, the user is asked if it should be sent to the printer:

DO YOU WANT FINAL TRAJECTORY PRINTED (Y/N)?

The whole procedure for calculating trajectories is repeated for the second vehicle.

After the trajectory calculations are complete, then the user is presented with a set of options that is used for drawing the pictures of the vehicles. The user can then accept the default options or change them. There are six options presented in the following form:

```
SCREEN OPTIONS

  1.  UNINTERRUPTED SEQUENCE ( YES)
  2.  MAGNIFIED VEHICLES     (  NO)
  3.  MULTIPLE EXPOSURE      ( YES)
  4.  SHOW TRAJECTORY        ( YES)
  5.  SHOW DAMAGE            (  NO)

  6.  DISPLAY PICTURE

  ENTER OPTION NUMBER:
```

By entering a number from 1-5, the user can change the current setting given in parentheses. The specified option is changed to the opposite setting. Thus, if an option was set to YES, it will be changed to NO and vice versa. The explanation of the different options are given below:

1. UNINTERRUPTED SEQUENCE:

YES---The sequence of pictures representing the movement of the vehicles along their trajectories will be shown without any interruption.

NO ---After each frame, the user is asked to enter RETURN to see the next picture. This allows the user to look at a particular frame for any length of time.

2. MAGNIFIED VEHICLES:

YES---The vehicles will be shown twice the size relative to the overall scale for the scene. For situations where there is significant motion, the actual size may be a little too small. This option allows the user to see a more comfortable size.

NO ---This is the normal setting, with the vehicles represented in their actual scale.

3. MULTIPLE EXPOSURE:

YES---The different frames will be drawn one over the other. This shows all the positions of a vehicle in its trajectory on one screen.

NO ---Each frame will be displayed individually, one after the other.

4. SHOW TRAJECTORY: YES---The trajectory of each vehicle will be displayed with a curved line and with the vehicles drawn at the initial and final positions.

   NO ---No trajectory is displayed.

5. SHOW DAMAGE: YES---The damage pattern of each vehicle will be displayed. The vehicles are highly magnified for this option.

   NO ---No damage will be displayed.

6. DISPLAY PICTURE: Entering this option ends the screen option selection and begins the drawing of the pictures.

If option 1 is changed to NO, then the program will ask the user for the number of intermediate positions. The user should enter a number between 0-15, indicating the number of intermediate positions at which vehicles will be drawn. A number greater than 2 or 3, however, will clutter up the figure drawn. The vehicles are always drawn at the first and last positions of the trajectory.

Following the user desired options, the program will present various aspects of the reconstruction. The first set of pictures will display the vehicles at the specified positions along the trajectory. The type of display will depend on the options selected by the user; e.g., uninterrupted or frame-by-frame viewing; single exposure or multiple exposure; magnified vehicles or scaled vehicles. Next, the trajectory of the vehicles will be displayed, if asked for by the user. Lastly, the damage pattern will be displayed, if desired by the user.

After all the desired views are shown, the program will prompt the user with the question:

DO YOU WANT TO RUN GRAPHICS AGAIN (Y/N)?

If the user enters Y, then the program will continue, otherwise it will end and return the user to the main system.

If the user entered a Y to the previous question, the program will then ask:

DO YOU WANT TO READ NEW INPUT FILE (Y/N)?

If the user enters a Y, the program begins at the first step. Otherwise, the program will use the trajectories already calculated and return the user to the Screen Option step. This can be utilized to change the settings of the options to obtain a new representation of the trajectory. For example, if the user had previously used the uninterrupted mode, he could change the setting to an interrupted mode and look at each individual frame, or even go into a multiple exposure mode to see the different positions all on one screen.

3.4 CRASH3 LOGIC

This section contains the schematic flow charts which describe the algorithms used to produce a solution in the CRASH3 program.

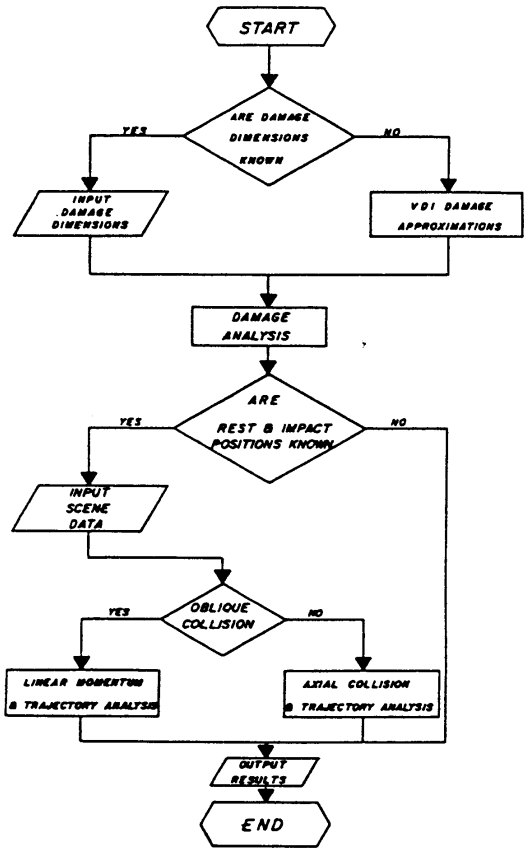

FIGURE 3.4 SCHEMATIC FLOW CHART OF THE CRASH3 COMPUTER PROGRAM

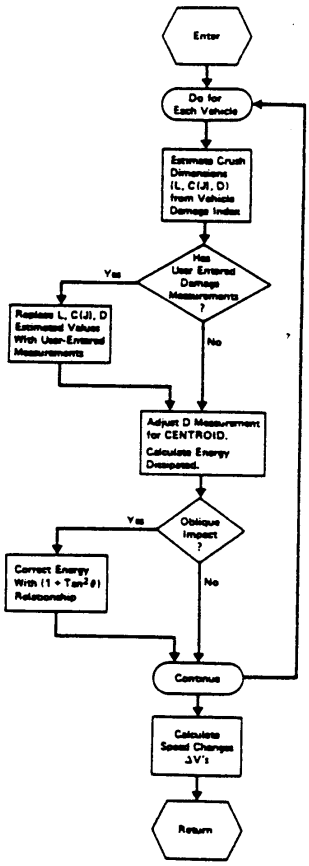

FIGURE 3.6 FLOW CHART FOR SUBROUTINE DAMAGE

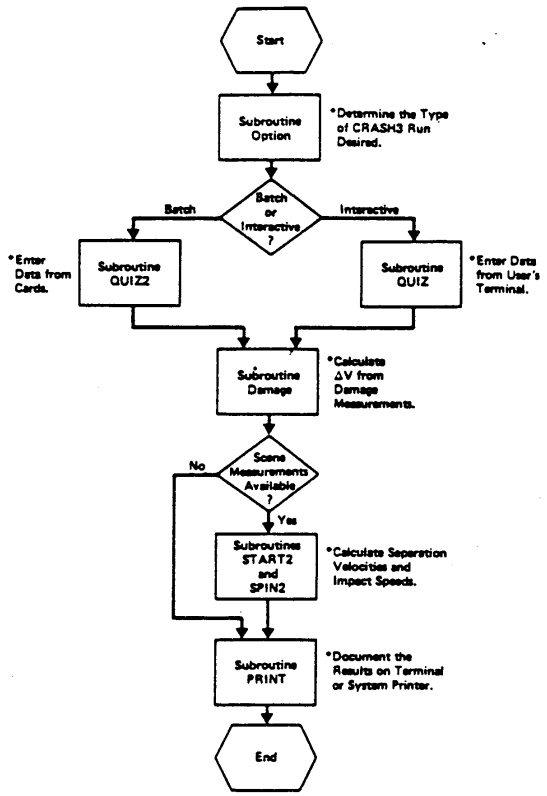

FIGURE 3.5 CONCEPTUAL FLOW CHART FOR TYPICAL CRASH3 RUN

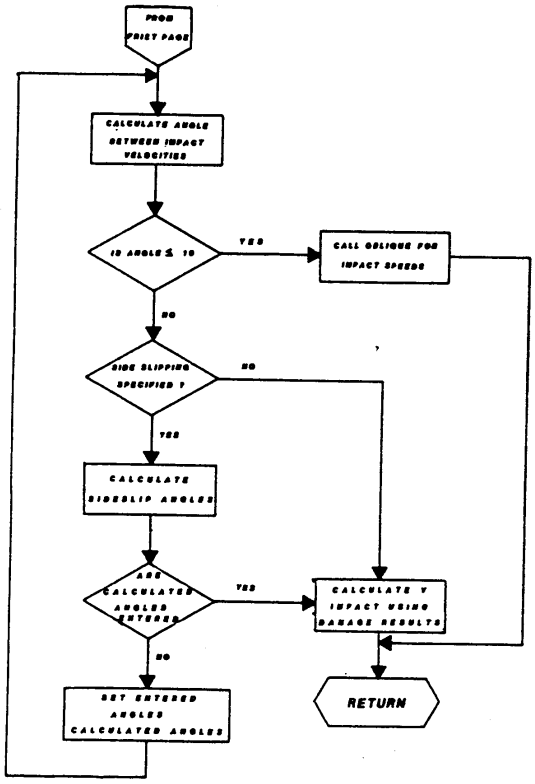

FIGURE 3.7 SUBROUTINE START2 FLOW CHART
(Continued)

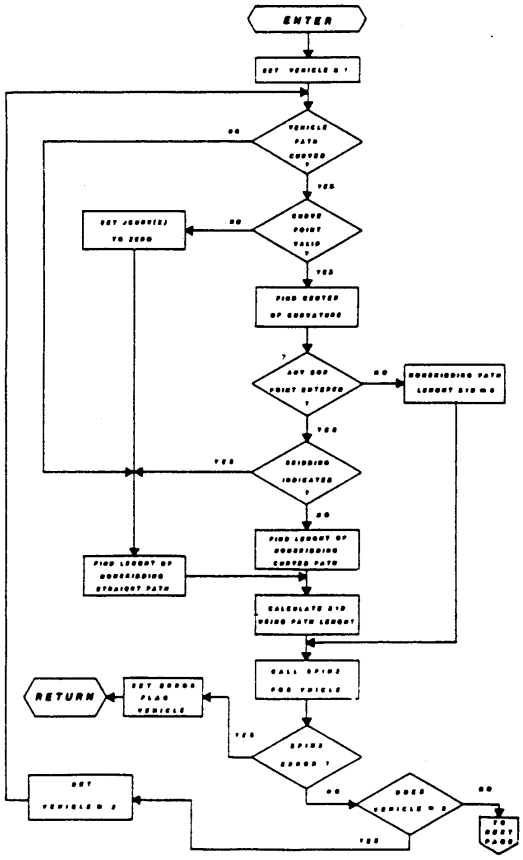

FIGURE 3.7 SUBROUTINE START2 FLOW CHART

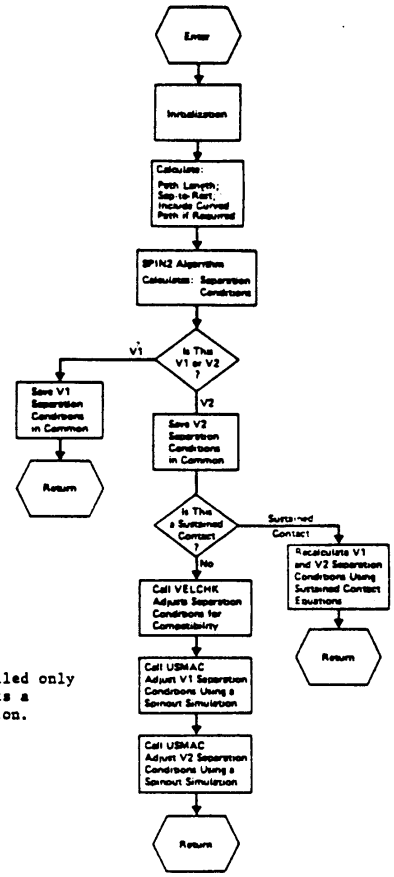

Note: USMAC is called only if the user requests a trajectory simulation.

FIGURE 3.8 FLOW CHART FOR SUBROUTINE SPIN2

3.5 DATA CONSISTENCY CHECKS

3.5.1 Spinout Error

In the older versions of the CRASH program, it was possible to enter incompatible responses to questions related to the position and orientation at which rotational skidding stopped, and, thereby, to obtain erroneous results. In particular, the combination of rolling resistance, distance from the end of rotation to rest, and tire-terrain friction coefficient establish the linear velocity at the end of rotation. Since the linear velocity at separation must be greater than or equal to that at the end of rotation, the user inputs determine the maximum elapsed time between separation and the end of rotation. The combination of maximum elapsed time and extent of total rotation establishes a minimum angular velocity at separation. If the initial angular velocity and the time available for angular deceleration are incompatible, erroneous results will be generated. The test detects combinations related to the end of rotational skidding that are inconsistent and causes the following message to be printed.

*** SPINOUT ERROR DETECTED ***

THE POSITION AND HEADING ENTERED FOR THE END OF ROTATIONAL SKIDDING FOR VEHICLE 1 ARE NOT COMPATIBLE WITH THE SUBMITTED ROLLING RESISTANCES AND THE TOTAL DISTANCE BETWEEN SEPARATION AND REST.

INPUT DATA SHOULD BE REVIEWED FOR POSSIBLE RELATED CHANGES PRIOR TO FURTHER RUNS.

DO YOU WISH TO SUBMIT ANOTHER RUN? (ANSWER YES OR NO)

The analytical basis for the test is outlined in the following paragraphs.

By equating the actual time of angular deceleration and the total time period during which angular motion exists, one obtains

$$\alpha_1 \frac{\Delta\psi}{\dot{\psi}_s} = \frac{2\dot{\psi}_s k^2}{(a + b)\ \mu g \alpha_2} \qquad (3.1)$$

Solution of equation (3.1) for $\dot{\psi}_s$ yields

$$(\dot{\psi}_s)_{max} = \sqrt{\frac{\alpha_1 \alpha_2\ \mu g\ (a + b)\ \Delta\psi}{2k^2}} \qquad (3.2)$$

The time period during which angular motion exists is related to the linear velocity in the following manner

$$\alpha_1 \frac{\Delta\psi}{\dot{\psi}_s} = \frac{\alpha_5 S_1}{(\dot{S}_s + \dot{S}_1)} \tag{3.3}$$

Solution of equation (3.3) for $(\dot{S}_s + \dot{S}_1)$ yields

$$(\dot{S}_s + \dot{S}_1)_{max} = \frac{\alpha_5 S_1 \dot{\psi}_s}{\alpha_1 \Delta\psi} \tag{3.4}$$

From equations (3.2) and (3.4),

$$(\dot{S}_s + \dot{S}_1)_{max} = \frac{\alpha_5 S_1}{\alpha_1 \Delta\psi} \sqrt{\frac{\alpha_1 \alpha_2 \mu g (a + b) \Delta\psi}{2k^2}}$$

(3.5)

The velocities, $\dot{S}_1$ and $\dot{S}_s$, are related to corresponding traveled distances in the following manner

$$\dot{S}_1 = \sqrt{2\mu\theta g S_{R1}} \tag{3.6}$$

$$(\dot{S}_s)_{max} = \sqrt{2\mu\theta g (S_1 + S_{R1})} \tag{3.7}$$

Substitution of equations (3.6) and (3.7) into (3.5) yields the following test of input compatibility

$$\frac{4\alpha_1 k^2 \theta}{\alpha_5 2\alpha_2 (a + b)} < \frac{S_1}{\Delta\psi \left(1 + \frac{2S_{R1}}{S_1} + \frac{2\sqrt{S_{R1}\,(S_1 + S_{R1})}}{S_1}\right)}$$

(3.8)

If the input compatibility test results in a negative or zero value, the numerical test is printed out with the "Spinout Error" message. In this manner, the user has a numerical measure of the extent of input incompatibility. If estimated inputs are revised in a rerun, the numerical test value indicates the corresponding change in the extent of input incompatibility. This provides a measure of whether the input data set is better or worse than the preceding set.

To provide guidance for the program user in the case of spinout errors, the following four quantities are also printed out with the "Spinout Error" message:

θ, S_1, $|\Delta\psi|$, S_{R1}

These four variables provide a convenient input error check. For example, an erroneous entry for the direction of rotation can produce a very large value for $|\Delta\psi|$ and thus a failure of the compatibility test. These variables also serve to summarize the results of pertinent inputs.

3.5.2 Rotation/Moment-Arm Compatibility Checks

With the CRASH3 program, it is possible for a careless user to enter damage data and principal directions of force (PDOF) that are not compatible with the entered direction of rotation for the spinout motions; the moment arms of the principal forces may not be in agreement with the angular accelerations indicated by the specified directions of rotation.

CRASH3 includes a simple test of the compatibility of the moment arm derived from the damage measurements and the user specified direction of vehicle rotation. To support this test, the damage moment arm is computed as a signed quantity, with positive values assigned to clockwise torques and negative values assigned to counterclockwise rotation forces. The moment arm, h, is evaluated with the following formula:

$$h = -Y_{Pi}\sin\alpha_i + X_{Pi}\cos\alpha_i \text{ inches}$$

where α_i = Entered angle of direction of principal force in the range 0° to ±180.

and X_{Pi}, Y_{Pi} are the coordinates of the centroid of the damaged area, with reference to the vehicle center of gravity as origin, x measured positive toward the vehicle right side, and Y measured positive toward the vehicle front.

This formula results in a positive sign for h for clockwise angular acceleration. The compatibility check compares the sign of h to the sign of the variable IRT(i), which encodes the user entered direction of rotation in the following format:

IRT(i) =	1	indicates clockwise rotation
=	0	indicates no rotation
=	-1	indicates counterclockwise rotation.

If h and IRT(i) have the same sign, the test of rotation direction compatibility is passed and program execution continues uninterrupted. If h and IRT(i) are of opposite sign, incompatibility of user-entered and damage-derived rotation

directions is indicated by one of the following messages:

```
DIRECTION OF ANGULAR VELOCITY CHANGE OF VEHICLE
1 IS NOT COMPATIBLE WITH MOMENT ARM OF PRINCIPAL
FORCE ACCORDING TO DAMAGE BASED CALCULATIONS.
REVIEW DAMAGE DATA IF RESULTS ARE QUESTIONABLE.

DIRECTION OF ANGULAR VELOCITY CHANGE OF VEHICLE
2 IS NOT COMPATIBLE WITH MOMENT ARM OF PRINCIPAL
FORCE ACCORDING TO DAMAGE BASED CALCULATIONS.
REVIEW DAMAGE DATA IF RESULTS ARE QUESTIONABLE.
```

This test may not be reliable in cases exhibiting small magnitudes of h, or as a result of inter-vehicle dynamics during a collision. For this reason, the messages displayed above are presented to the user as a warning only, and the program operation is not terminated. In cases where the user has not indicated vehicle rotation, the test is bypassed, i.e., IRT = 0. If h = 0, the test is automatically passed regardless of the sign of IRT.

3.5.3 Incompatible Heading Angle and PDOF

Vehicle heading angles and directions of principal force or clock directions that are not compatible can be carelessly entered by the CRASH3 user, resulting in non-colinear principal directions of

forces (PDOF). Such a set of inputs, of course, violates Newton's Third Law of Motion.

CRASH3 contains a simple test of inputs to ensure that the principal forces are 180° apart. For discrepancies from 180° that are less than or equal to ±15 degrees, the entered PDOFs are equally adjusted to achieve 180 ± 0.10 degrees and a corresponding message is printed. For discrepancies from 180° greater than ±15°, a program stop is activated and a corresponding message is printed. The test procedure is outlined on the following pages. The following symbols are defined as,

α_i = Principal direction of force on vehicle i in degrees.

ψ_i = Heading angle of vehicle i in degrees.

<u>QUIZ Routine</u>

Test Inputs: ψ_1, ψ_2, α_1, α_2 (DEGREES)

$$TEMP1 = \psi_1 + \alpha_1 \tag{3.9}$$

$$TEMP2 = \psi_2 + \alpha_2 \tag{3.10}$$

$A = TEMP1 - TEMP2$ (3.11)

IF $| A | < 210^{0}$, GO TO (3.14) (3.12)

SET $A = A - (180)$ (sgn A), GO TO (3.12) (3.13)

$\delta = A - (180)$ (sgn A) (3.14)

IF $15^{0} < | \delta |$, STOP AND PRINT (3.15)

MESSAGE:

"ENTERED VALUES FOR HEADING ANGLES AND DIRECTIONS OF PRINCIPAL FORCES ARE NOT COMPATIBLE (I.E., THE PRINCIPAL FORCES ARE NOT 180° APART). CHECK INPUT DATA. ALSO, SEE USER'S MANUAL.

IF $| \delta | < 0.10$, RETURN (3.16)

$\alpha_1 = \alpha_1 - \frac{\delta}{2}$ (3.17)

PRINT MESSAGE: "ENTERED PDOF VALUES ADJUSTED TO BE 180° APART

$\alpha_2 = \alpha_2 + \frac{\delta}{2}$ (3.18)

RETURN TO (3.9)

3.5.4 Sustained Contact

A long-recognized shortcoming of the CRASH2 computer program was its inability to deal with those collisions in which vehicle-to-vehicle contact is maintained during the spinout motions. An example would be a case in which a parked vehicle is hit broadside and the struck vehicle is subsequently pushed laterally by the striking vehicle until they both come to rest. The difficulty with CRASH2 stemmed from an assumption that the individual vehicles go separately and independently to rest subsequent to a collision.

For oblique collisions in which the two involved vehicles separate rapidly and move in distinctly different directions, the stated assumption is a valid one. It is also valid for cases in which the two vehicles move in the same general direction so long as the trailing vehicle has a greater deceleration rate than the leading vehicle. However, a greater deceleration rate in the leading vehicle can produce sustained intervehicle contact as the trailing vehicle pushes the leading vehicle.

The approach that has been taken in extending the CRASH2 program to accommodate cases of sustained contact is very simple and direct. The routine that has been developed and coded within the SPIN2 subroutine tests the directions of motion, the extents of yaw rotations and the deceleration rates of the two vehicles. The selected test criteria are based on several actual near-central side impacts in which the struck vehicle was either parked or moving slowly. The non-yawing drag factor that is discussed in the next section of this report is applied to the individual vehicles in some such cases.

A schematic flow chart of the developed calculation procedure for sustained contacts is presented in Figure 3.9. The selected test values can, of course, be adjusted as experience is gained with collisions of this type.

The test procedures to determine whether or not a collision involved sustained contact have been replaced by Question 11 in QUIZ, which simply asks the user whether or not sustained contact existed. If the user answers yes, the sustained contact solution procedure is used.

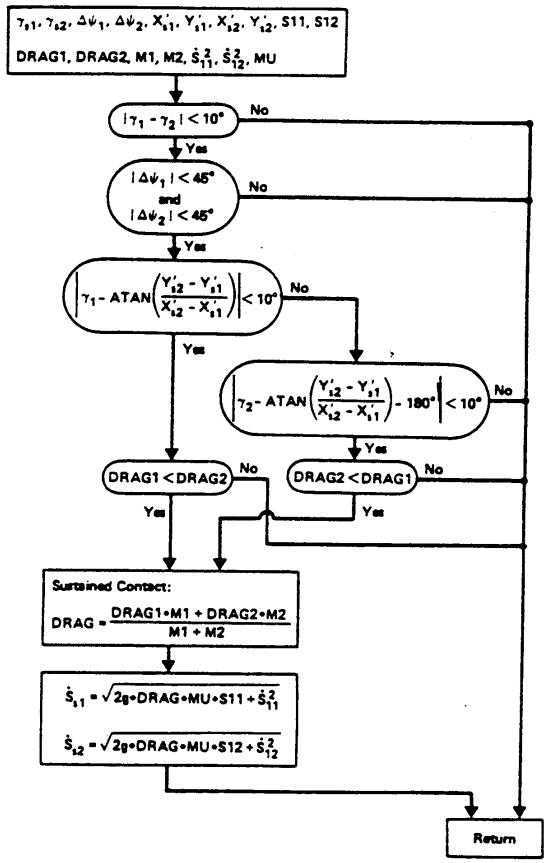

FIGURE 3.9 SUSTAINED CONTACT CALCULATION PROCEDURE

In further checkout runs of the calculation procedure for sustained contacts, it was found that the SPIN2 routine, as originally coded, would sometimes overestimate the quantity DRAG for the case of near-longitudinal spinout direction and a small total yaw rotation. As a result, the sustained-contact solution form could be erroneously bypassed in some intersection collisions on the basis of the comparison of DRAG values for the struck and striking vehicles.

The problem was found to stem from two sources. First, the existing input questions tend to invite a generally erroneous indication that rotational skidding was sustained throughout the trajectory to rest. Whenever the physical evidence does not clearly define the point at which rotation stopped, the CRASH user tends to enter a "NO" response for questions 13 and/or 20. (Did rotational and/or lateral skidding of vehicle i stop before rest position was reached?) Second, the SPIN2 routine does not presently distinguish the direction of the separation velocity vector with respect to the longitudinal axis of the vehicle; the same results are produced for longitudinal and broadside initial velocity vectors. For the case of partial braking and a

small total yaw rotation, the actual deceleration rate in predominantly longitudinal motions is determined primarily by the rolling resistance at the wheels.

The basis for the present form of SPIN2 is a set of 18 SMAC runs, which involved relatively large rotational velocities at separation, that were used to develop the empirical coefficients, $\alpha = f(\rho)$. Obviously, a larger sample of spinouts including small yawing velocities would be expected to display some sensitivity to the initial direction of the linear velocity. However, it should be noted that a relatively large angular (yaw) velocity is generally necessary to produce a <u>sustained</u> rotational skid in the case of partial braking. The rotational velocity tends to become transformed into linear velocity when a path of less resistance is offered to the skidding vehicle. Thus, a "YES" response is frequently appropriate for Question 13 and/or 20 in rotational skids.

To overcome the cited difficulties within the existing framework of SPIN2, a test of the ratio of linear to angular displacement has been incorporated to detect those cases in which the spinout motion is predominantly a linear translation.

Such cases are treated in the same manner as the case of skidding without rotation.

The initial selected test value for the displacement ratio is 500 inches per radian, approximately 8.7 inches/degree, which is based on several test cases that have constituted problems for the sustained-contact solution form. It is also based on the gross approximation that a displacement ratio below the range of 300 to 400 inches/radian is required to develop slip angles sufficiently large to produce maximum tire side forces. Thus, the test may be viewed as a detector of gross deviations from a condition of rotational skidding. It should be noted that a related CRASH2 problem indicated in correspondence from the Transport and Road Research Laboratory[22] involved a linear to angular displacement ratio of 2,200 inch per radian.

A test of the total extent to heading change has been incorporated to detect high-speed spinouts. The initially selected test value is 20°.

A larger sample of checkout application runs is required to determine the possible need for adjustment of the indicated test values so that smooth transitions will be achieved between the

different solution forms (i.e., rotational and lateral skidding, lateral skidding without significant rotation, and non-skidding motions). Consequently, a larger sample of spinout motions was examined to guide further development and refinement of SPIN2. The results of that study were not promising for satisfactory refinement of SPIN2 estimates. Attention may be turned to refinement of the trajectory simulation routine for determining more accurate separation conditions.

3.5.5 Common Velocity Check

It has long been recognized that additional internal checks of the compatibility of the different items of user inputs would be required to achieve improved reliability of reconstruction results obtained with the CRASH computer program. In particular, a need for checking the independently calculated (SPIN2) values of separation velocities for the two involved vehicles for compatibility with a "common" velocity at the regions of collision contact was discussed by McHenry[2] Without such a check, it is possible for a user to specify spinout distances, heading changes and wheel-rotational resistances for the individual vehicles corresponding to separation

velocities that are not compatible with a common velocity at the plan-view centroids of the damaged regions.

In applications of the SPIN2 subroutine within CRASH3, the spinout motions of the two colliding vehicles are separately analyzed. In subsequent conservation of momentum relationships, it is assumed without verification that the plan-view centroids of the damaged areas of the two vehicles reached a common velocity along the direction of the principal forces as shown in Figure 3.10. Since the extents of drag on the two vehicles are independently specified, it is possible to calculate and apply separation velocities that are not compatible with a common velocity at the plan-view centroids of the damaged regions.

The individual spinout calculations (SPIN2) for Vehicles 1 and 2 may be viewed as two independent approximations of the common velocity achieved by the two vehicles. Thus, the average of the two values for the common velocity should be more reliable than either individual value. In the calculation sequence depicted in Figure 3.11, the average of the two independently determined values for the common velocity (TEMP6) along the principal direction of force (PDOF) is taken to be the

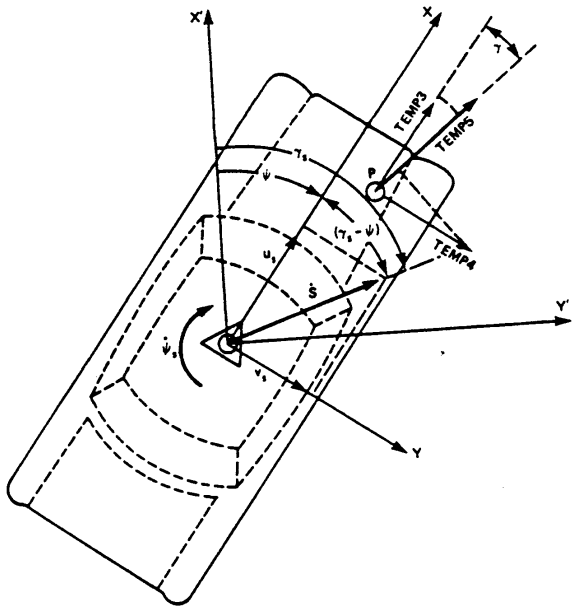

$u_s = \dot{S} \cos (\gamma_s - \psi)$

$v_s = \dot{S} \sin (\gamma_s - \psi)$

$\text{TEMP3} = u_s - Y_p \dot{\psi}_s$

$\text{TEMP4} = v_s + x_p \dot{\psi}_s$

$\text{TEMP5} = (\text{TEMP3}) \cos \alpha + (\text{TEMP4}) \sin \alpha$

$= \dot{S} \cos (\gamma_s - \psi - \alpha) + \dot{\psi}_s (x_p \sin \alpha - Y_p \cos \alpha)$

FIGURE 3.10 COMPONENT OF SEPARATION VELOCITY ALONG DIRECTION OF PRINCIPAL FORCE IN VEHICLE COORDINATE SYSTEM

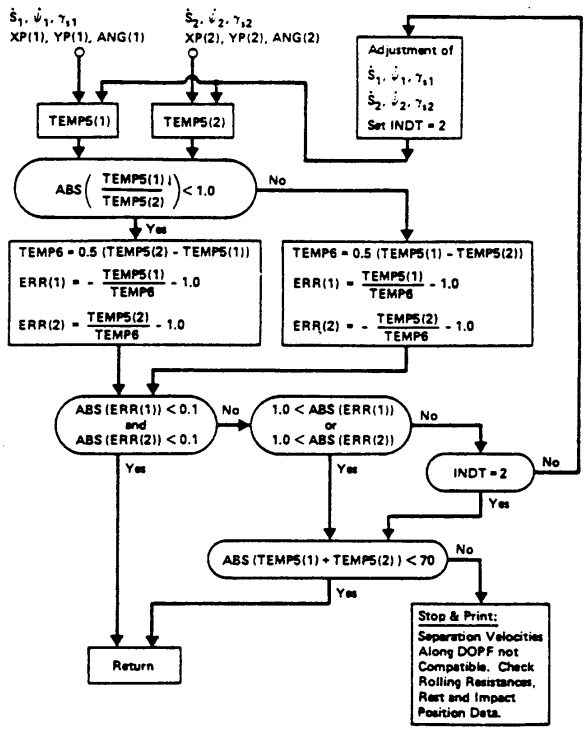

FIGURE 3.11 SCHEMATIC FLOW CHART OF COMMON-VELOCITY CHECK

most reliable value, and individual errors [ERR(1), ERR(2)] are calculated in relation to TEMP6.

For errors less than ±10% about the mean value, TEMP6, or for an absolute value of the differences in velocities along the PDOF less than 4 mph, no adjustments are made. For errors greater than ±100% and for an absolute value of the difference in velocities along the PDOF greater than 4 mph, the program is stopped and an error message is printed.

When the errors, ERR(1) and ERR(2) are within the range of ±10% to ±100%, an adjustment procedure based on the partial derivatives of TEMP5 is applied:

$$\text{TEMP5} = \dot{S} \cos(\gamma_s - \psi - \alpha) + \dot{\psi}_s (X_\rho \sin\alpha - y_\rho \cos\alpha) \tag{3.19}$$

$$\frac{\partial\,(\text{TEMP5})}{\partial \dot{S}} = \cos(\gamma_s - \psi - \alpha) \tag{3.20}$$

$$\frac{\partial\,(\text{TEMP5})}{2\dot{\psi}_s} = X_\rho \sin\alpha - y_\rho \cos\alpha \tag{3.21}$$

$$\frac{\partial\ (\text{TEMP5})}{\partial \gamma_s} = -\dot{S}\ \sin\ (\gamma_s - \psi - \alpha) \qquad (3.22)$$

$$\Delta(\text{TEMP5}) = \Delta\dot{S}[\cos(\gamma_s-\psi-\alpha)] + \Delta\dot{\psi}_s(X_\rho \sin\alpha - y_\rho \cos\alpha)$$

$$- \Delta\gamma_s[\dot{S}\sin(\gamma_s-\psi-\alpha)] \qquad (3.23)$$

where the above quantities are defined by Figure 3.11.

Adjustments of $\dot{S}$, $\dot{\psi}_s$, and γ_s are made in the indicated sequence and with limits of ±7.5%, ±15%, and ±15°, respectively. Subsequent to each individual adjustment, the variable TEMP5 is compared with a target value which will achieve the ±10% error range about TEMP6. If the objective is achieved at any point within the adjustment procedure, further adjustments are bypassed.

The common-velocity check has been coded in subroutine VELCHK. Checkout runs have been performed and the described calculation procedure is fully operational.

APPENDIX A: DEFINITIONS OF SYMBOLS

The subscripts 1 and 2 are used throughout this manual to designate variables corresponding to Vehicles 1 and 2, respectively. The subscripts o and s are used to indicate the values of the variables that exist at initial contact (o) and at separation (s). Changes in the positions and orientations of the two vehicles between the times of initial contact and separation are presently neglected in the CRASH calculations. Units are indicated with those variables where a particular unit system is required. For variables with no units marked units consistent with the particular equation should be used.

A	= Empirical stiffness coefficient representing maximum amount of elastic crush (inches).
(a + b)	= Vehicle wheelbase.
B	= Empirical stiffness coefficient representing stiffness of vehicle (lbs/inch).
$C_1 \ldots C_6$	= Six evenly spaced vehicle crush measurements (inches).
$C_1 \ldots C_5$	= Trajectory adjustment coefficients in Section 2.4.

C_T = Cornering stiffness of vehicle tire (all four combined) for small slip angles (lbs/radian).

C_R = Crush in the direction of F_R.

C_N = Crush normal to the x axis in direction of F_N.

DRAG1, DRAG2 = Ratio from resultant motion-resisting force in skids to product of vehicle weight and tire-terrain friction coefficient.

D = Distance from the center of the damaged region to the vehicle center of gravity, measured along the vehicle-fixed X axis for side impacts on the vehicle-fixed Y axis for end impacts (inches).

D' = Distance from the plan-view centroid of the damaged region to the vehicle center of gravity, measured along the vehicle-fixed X axis for side impacts or the vehicle-fixed Y axis for end impacts (inches).

E_1, E_2 = Energy absorbed in crushing Vehicle 1 or 2.

E_A = Energy absorbed during the approach period.

E_T = Total effective energy absorbed in vehicle deformation C.

F_s = Resultant drag force opposing vehicle motion in non-rotating separation trajectories (lbs).

F_c = Resisting tire force in the wheel plane (lbs).

F_i = Principal force that acts on Vehicle i (lbs).

F_R = Resultant force acting on vehicle (lbs).

F_N = Normal force acting on vehicle (lbs).

F_T = Tangential force acting on vehicle in Section 2.2.5 (lbs).

F_T = Tractive tire force in Section 2.3.5.

G = Empirical stiffness coefficient representing elastic energy (inch-lbs).

g = Acceleration due to gravity = 386.4 inches/sec^2.

$g_1 \ldots g_4$ = Contributions to drag in rolling resistance option 2.

h_i = Moment arm of the principal force that acts on Vehicle i, for clockwise angular (yawing) acceleration of i (inches).

k_i^2 = Yaw radius of gyration squared for complete Vehicle i (inches^2).

K_1, K_2 = Stiffness coefficient of vehicles in Section 2.2.1.

KE_0 = Initial kinetic energy of the moving vehicle before collision (inch-lbs).

KE_C = Kinetic energy used to crush the vehicles (inch-lbs).

K_i = Test ratio for evaluation of the compatibility of vehicle rotational acceleration and the moment arm of the principal force.

L = Width of damaged area (inches).

ℓ = Incremental damage width (inches).

M_1, M_2 = Complete-vehicle masses of Vehicles 1 and 2, respectively (lb-sec^2/in).

MU = Nominal tire-terrain friction coefficient.

$n_1 \ldots n_4$ = Contribution of various effect to total wheel lockup, rolling resistance option 1.

P'_M = Space-fixed point corresponding to location of two-vehicle system center of gravity at instant of collision contact, defined by coordinates X'_M, Y'_M (inches).

QUIZ = Input subroutine of CRASH computer program.

S_{11}, S_{12} = Distance between vehicle center of gravity position at separation and at end of skidding (i.e., lateral and/or rotational [yaw]) (inches).

$\dot{S}_{11}$, $\dot{S}_{12}$ = Residual linear velocity of vehicle at end of skidding (i.e., lateral and/or rotational [yaw]) (inches/second).

SPIN2 = Trajectory analysis subroutine of the CRASH computer program.

Δt_1 = Time required to bring vehicle to rest (angular motion) (sec).

Δt_2 = Time required to bring vehicle to rest (linear motion) (sec).

T_1 = Total time of angular motion.

T_2 = Total time of linear motion.

TEMP = Distance from the original side or end surface of the centroid of the plan-view damage area (inches).

TEMP1 = Distance from vehicle center of gravity to the centroid of the plan-view damage area, measured along the vehicle-fixed Y axis for side impacts or the vehicle-fixed X axis for end impacts (inches).

TEMP2 = Distance from the center to the centroid of the plan-view damage region, measured along the vehicle-fixed X axis for side impacts or the vehicle-fixed X axis for side impacts or the vehicle-fixed Y axis for end impacts (inches).

TEMP3 = Longitudinal components (vehicle coordinate system) of separation velocity at centroid of plan-view damaged region (inches/sec).

TEMP4 = Lateral component (vehicle coordinate system) of separation velocity at centroid of plan-view damaged region (inches/sec).

TEMP5	= Component of separation velocity along direction of principal force in vehicle coordinate system (inches/sec).
TEMP6	= Average of the independently determined values for the common velocity along the directions of principal force for Vehicles 1 and 2 (inches/sec).
ERR(1), ERR(2)	= Errors in velocity components along directions of principal force with respect to average value, TEMP6, expressed as decimal fractions.
U_i	= Longitudinal component of linear velocity of Vehicle 1, taken along vehicle-fixed X axis (inches/sec).
V_C	= Common velocity of Vehicle 1 and 2 at instant of maximum crush.
V_i	= Lateral component of linear velocity of Vehicle i, taken along vehicle-fixed axis (inches/sec).
ΔV_i	= Change in velocity of Vehicle i.
ΔV_{Ri}	= Magnitude of resultant velocity change of Vehicle i (inches/sec).
(VEL)i	= Magnitude of resultant velocity vector of Vehicle i at time of initial contact between vehicles (inches/sec).
W	= Total vehicle weight (lbs).
X', Y'	= Space-fixed coordinates of the center of gravity of the vehicles (inches).

X'_M, Y'_M = Space-fixed coordinates of point P'_M corresponding to location of two-vehicle system center of gravity at instant of collision contact (inches).

X_{Pi}, Y_{Pi} = Vehicle-fixed coordinates of the centroid of the plan- view damaged region of Vehicle i (inches).

X'_{Pi}, Y'_{Pi} = Space-fixed coordinates of the centroid of the plan-view damaged region of Vehicle i (inches).

X'_{Ci}, Y'_{Ci} = Space-fixed coordinates of the center of gravity of Vehicle i (inches).

X_i, Y_i = Vehicle-fixed coordinates of points on Vehicle i in inches.

$\dot{X}$ $\dot{Y}$ = Velocity of vehicle c.g.

$\ddot{X}$ $\ddot{Y}$ = Acceleration of vehicle c.g.

X'_i, Y'_i = Space-fixed coordinates of points on Vehicle i in inches.

X_F, X_R = Distance along vehicle-fixed X axis from the <u>total</u> vehicle center of gravity to the boundaries of the vehicle at the front and rear, respectively; inches, (X_R is entered as a <u>negative</u> quantity).

Y_S = Distance along vehicle-fixed Y axis from the total vehicle center of gravity to the boundary of the vehicle at the side (i.e., one-half of the total vehicle width) (inches).

α_i = The side-slip angle is the direction from which the principal force acts on Vehicle i, measured in the range of ±3.142 radians from the straight-ahead direction.

$\alpha_1 \ldots \alpha_5$ = Empirical coefficients used in SPIN2.

β_i = Initial side-slip angle of Vehicle i (radians).

δ = Relative displacement of Vehicle 1 with respect to Vehicle 2.

$\dot{\delta}_0$ = Relative velocity at impact of Vehicle 1 and Vehicle 2.

ε = Coefficient of restitution (dimensionless).

$\varepsilon_1 \ldots \varepsilon_5$ = Trajectory errors in Section 2.4.

γ_i = Direction of resultant velocity vector of Vehicle i at separation, measured clockwise (+) from the space-fixed X' axis (radians) (SPIN subroutine).

γ_i = A factor used to adjust vehicle masses in non-central collisions for rotational effects on delta-V (Subroutine DAMAGE).

γ_s = Separation angle (radians).

θ = Dimensionless decimal portion of full longitudinal deceleration produced by rotational resistance due to braking and/or damage at the wheels; $0 \leq \theta \leq 1.00$.

μ	= Nominal tire-terrain friction coefficient.
μ_{eq}	= Equivalent tire-terrain coefficient of friction.
μ_f	= Intervehicular coefficient of friction.
Ψ_i	= Heading angle of Vehicle i, measured clockwise (+) from the space-fixed X' axis (radians).
$\Delta\Psi_i$	= Change in heading angle of Vehicle i between the time of separation and end of rotational skidding. Measured clockwise (+) (radians).
$\dot{\Psi}_i$	= Angular (yaw) velocity of Vehicle i about the vertical axis through the center of gravity (radians/sec).
$\Delta\dot{\Psi}_i$	= Change in angular (yaw) velocity of Vehicle i (radians/sec).
$\ddot{\Psi}_i$	= Angular (yaw) acceleration of Vehicle i (radians/sec^2).

March 1984 edition

CURRENT PRODUCT ENGINEERING SAE J224 MAR/84

SAFETY & CRASHWORTHINESS SYSTEMS

COLLISION DEFORMATION CLASSIFICATION

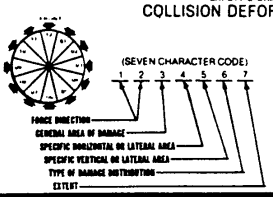

COL 1 & 2 SHIFTING

- ENDS
  - VERTICAL
    - UP ADD 20
    - DOWN ADD 40
  - LATERAL
    - RIGHT ADD 60
    - LEFT ADD 80
- TOP
  - FORWARD ADD 20
  - REARWARD ADD 40
  - LATERAL
    - RIGHT ADD 60
    - LEFT ADD 80

Column No. 3

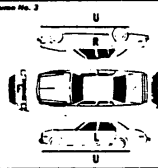

F-FRONT
R RIGHT SIDE
B BACK (REAR)
L-LEFT SIDE
T-TOP
U-UNDERSIDE
X-UNCLASSIFIABLE

	F B LAT VERT	L R LONG VERT	T U HOR
COL 3			
COL 4	LAT	LONG	LONG
COL 5	VERT	VERT	LAT
COL 7	LONG	LAT	VERT

Column No. 4

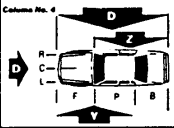

D- DISTRUBUTED
L- LEFT - FRONT OR REAR
C- CENTER - FRONT OR REAR
R- RIGHT - FRONT OR REAR
F- SIDE FRONT - LEFT OR RIGHT
P- SIDE CENTER SECTION- LEFT OR RIGHT
B- SIDE REAR - LEFT OR RIGHT
Y-SIDE OR END - F + P OR L + C
Z- SIDE OR END- B + P OR R + C

Column No. 5

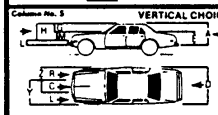

VERTICAL CHOICES (FRONT, REAR OR SIDE)

A- ALL
H- TOP OF FRAME TO TOP
E- EVERYTHING BELOW GLASS
G- GLASS AND ABOVE
M- MIDDLE (FRAME TO GLASS OR HOOD)
L- FRAME
W- WHEELS & TIRES ONLY

LATERAL CHOICES (TOP & UNDERSIDE)

C- CENTER
R- RIGHT
Y- L & C
Z- R & C
D- DISTRIBUTED
L- LEFT

Column No. 6

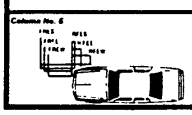

W- WIDE IMPACT AREA>16"
N- NARROW IMPACT AREA≤16"
S- SIDE SWIPE 0"<4"
O- POLLOVER (INCLUDES ROLLING ONTO SIDE)
A- OVERHANGING STRUCTURE
E- CORNER 4"<16"
U- NO RESIDUAL DEFORMATION
K- CONVERSION

March 1984 edition

DEFORMATION EXTENT ZONES
(FOR STATION WAGONS)

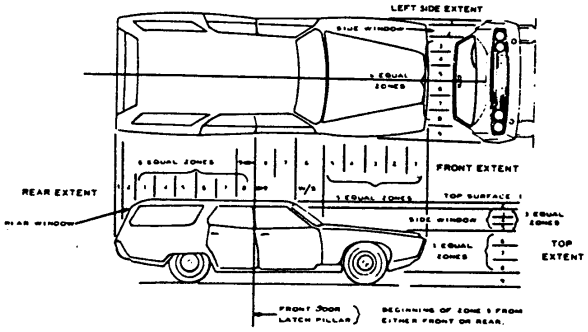

DEFORMATION EXTENT ZONES
(FOR PASSENGER CARS)

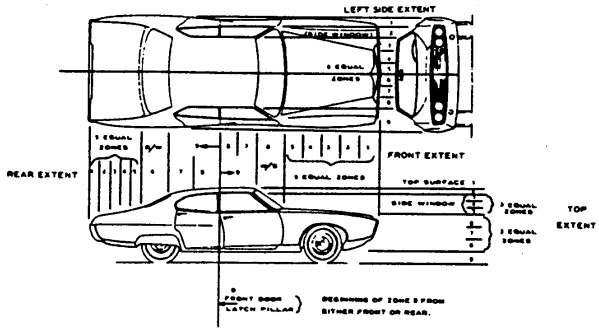

The following pages describe the Collision Deformation Classification (CDC) of the March 1980 edition. This material is provided for reference since a description of the March 1984 CDC edition is not available and the differences between the two editions are minor.

APPENDIX B

COLLISION DEFORMATION CLASSIFICATION—SAE J224 MAR80

SAE Recommended Practice

Report of the Automotive Safety Committee, approved January 1971, completely revised by the Motor Vehicle Safety Systems Testing Committee March 1980.

1. Purpose and Scope—The purpose and scope of this SAE Recommended Practice is to provide a basis for classification of the extent of vehicle deformation caused by vehicle accidents on the highway. It is necessary to classify collision contact deformation (as opposed to induced deformation) so that the accident deformation may be segregated into rather narrow limits. Studies of collision deformation can then be performed on one or many data banks with assurance that the data under study are of essentially the same type.[1]

The seven-character code is also an expression useful to persons engaged in automobile safety, to describe appropriately a field-damaged vehicle with conciseness in their oral and written communications. Although this classification system was established primarily for use by professional teams investigating accidents in depth, other groups may also find it useful.

The classification system consists of seven characters, three numeric, and four alphameric, arranged in a specific order. The characters describe the deformation detail concerning the direction, location, size of the area, and extent which, combined together, form a descriptive composite of the vehicle damage. The individual character positions are referred to by column number for identification and computer storage compatibility as illustrated in Fig. 1. The definition of each classification is provided in subsequent sections. An Appendix is also provided to assist in application and interpretation.

1.1 Interpretation Requests—A task group has been established to process interpretation requests that may arise during worldwide use due to unpredictable changes in vehicle style, word meanings, translations, user backgrounds, etc. The format of the requests and address of the task group is given in the Appendix.

2. Classification of Collision Damage—Vehicle collision damage is classified in a three-dimensional system. Column 3, *Deformation Location*, defines an orthogonal set of axes for Columns 4, 5, and 7 (see Appendix). Columns 1, 2, and 6 provide additional description. Individual character positions are defined as follows:

2.1 Columns 1 and 2: Direction of Principal Force During Impact—The principal force is the force that caused the crush and sheet metal displacement on the damaged vehicle. The direction of the principal force is determined by the resultant of forces acting on the vehicle (that is, vector analysis) at the

[1] K. A. Stonex, W. D. Nelson, et al., "Collision Damage Severity Scale." Paper 700136, presented at SAE Automotive Engineering Congress, Detroit, January 1970.

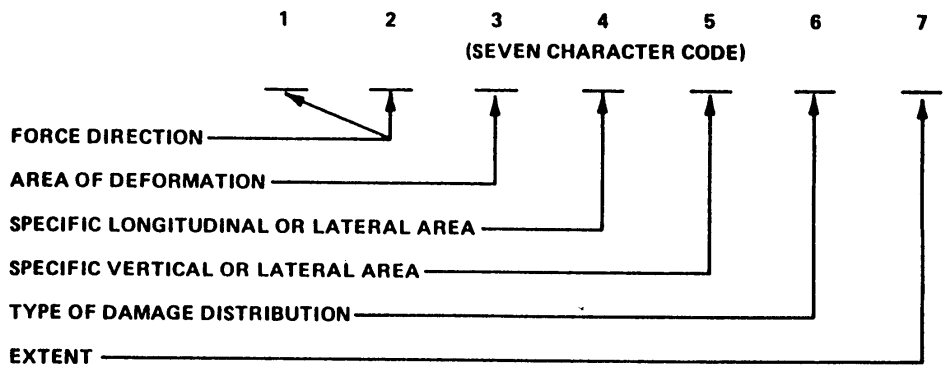
1
2
3
4
5
6
7
(SEVEN CHARACTER CODE)
FORCE DIRECTION
AREA OF DEFORMATION
SPECIFIC LONGITUDINAL OR LATERAL AREA
SPECIFIC VERTICAL OR LATERAL AREA
TYPE OF DAMAGE DISTRIBUTION
EXTENT

FIG. 1

point of application. The direction of the principal force is designated by reference to hour sectors on a conventional clockface, positioned over the point of application.

The clockface is assumed to be in a plane referenced to the horizontal plane of the car. *Twelve o'clock* characterizes the direction of an oncoming force relative to the vehicle applied at the area of vehicle deformation. Other examples of clock positions, such as "3", "6", and "9" o'clock, refer to forces directed from the right, rear, and left, respectively. The code classifications are the hour numerals from "01"-"12". Columns 1 and 2 of the classification system are used for direction of principal force (see Fig. 2). The entry of "00" indicates that the impact is not horizontal, as in a rollover or undercarriage type impact.

The direction of principal force classification is incremented to indicate vertical or lateral shifting of vehicle basic end structures which occurs during horizontal force applications. The shifting must be 4 in (100 mm) or greater to be classified, and is not related to the extent of crush (see Appendix). Specific increments related to direction of shift are shown in Table 1.

Codes are also provided to indicate longitudinal or lateral shifting of the top structure as a result of non-horizontal force applications (that is, "00" direction of force) to the top. Shifting should be classified when visually apparent. Specific classifications related to direction of shifting are shown in Table 2.

2.2 Column 3: Deformation Location and Classification Code—This character of a classification expression broadly defines which projected area of the vehicle contains the deformation (see Fig. 3). The windshield is included in the "F" projected area and the backlight is included in the "B" projected

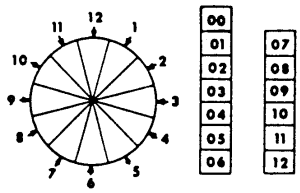

FIG. 2

TABLE 1

Direction of End Shift	Classification	Basic Rule[a]
No Shift of Damaged Area	01–12	Add 0
Vertical—Up	21–32	Add 20
Vertical—Down	41–52	Add 40
Lateral—Right	61–72	Add 60
Lateral—Left	81–92	Add 80

[a] Specific increment added to horizontal resultant direction of force (see Appendix).

TABLE 2

Direction of Top Shift	Classification
No Shift	00
Forward	20
Rearward	40
Lateral—Right	60
Lateral—Left	80

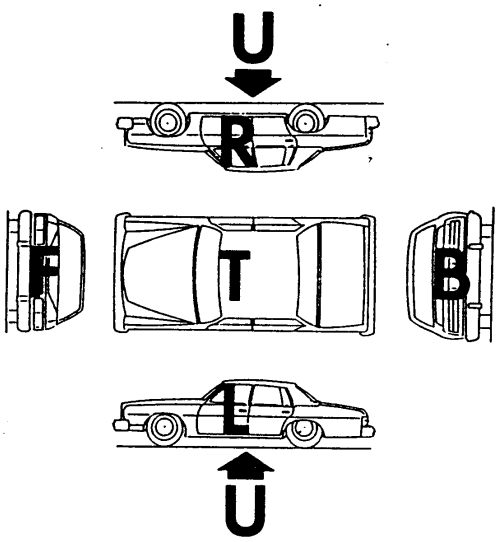

Location	Classification
Front	F
Right Side	R
Back (Rear)	B
Left Side	L
Top	T
Undercarriage	U
Unclassifiable	X

FIG. 3

area. The "U" (undercarriage) character is defined as the bottom plane of the vehicle, including all projections, but excluding the tires and wheels. Impacts involving only the tires or wheels are classified, "F", "L", "R", or "B" as determined by the projected area of initial contact ("W" must be entered in Column 5 for these impacts). The "X" character in Column 3 is reserved for catastrophic impact configurations in which the projected area of involvement cannot be determined (non-classifiable).

2.3 Column 4: Specific Longitudinal or Lateral Location of Deformation and Classification Code—The plan view of the vehicle (Fig. 4) illustrates the horizontal areas to be used in locating the deformation for "F", "B", "R", or "L" in Column 3. The letters shown at the front and rear of the vehicle can be for either the front or the rear. The letters shown on both sides can be used for either side. Classification codes for this column are orthogonal to either the longitudinal or lateral axis of the vehicle. Variations in vehicles require special definitions for the classification code "P". "P" is defined as follows:

(a) Passenger cars—from the base of windshield to the rear of the rearmost seat.

(b) Station wagons—from the base of windshield to the rear of the second seat.

(c) Vans—from the front seat backrest to the center of the rear wheel.

(d) Pickups—from the base of windshield to the rear of the cab.

(e) Soft top jeeps—from the base of windshield to the center of the rear wheel.

"F" and "B" are side deformation areas forward and rearward of "P", respectively. Column 4 has meaning only in connection with Column 3; that is, it is a suffix of Column 3, rather than being independent of it. This column also locates the longitudinal area of damage for vehicles with top or undercarriage deformation ("T" or "U" in Column 3).

The classifications, "F", "P", "B", "Y", "Z", and "D" must be used in Column 4 for vehicles with top or undercarriage deformation ("T" or "U" in Column 3).

2.4 Column 5: Specific Vertical or Lateral Location of Deformation and Classification Code—Fig. 5A illustrates the classifications for the vertical location of deformations associated with impacts classified "F", "B", "L", or "R" in Column 3. Fig. 5B illustrates the classifications for the lateral location of deformations associated with impacts classified as "T" or "U" in Column 3.

2.5 Column 6: General Type of Damage Distribution and Classification Code—Definition of the classifications is shown in Table 3:

TABLE 3

Type	Classification
Wide impact area	W
Narrow impact area	N
Sideswipe	S
Rollover (includes rolling onto side)	O
Overhanging structures (inverted step)	A
Corner (extends from corner to $\leq$16 in [410 mm])	E
Conversion in impact type (requires multiple CDC)	K
No residual deformation	U

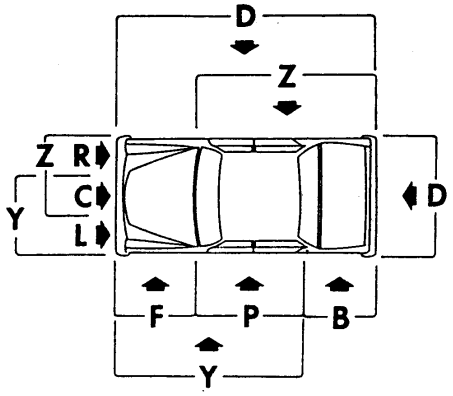

Location	Classification
Distributed—side or end	D
Left—front or rear	L
Center—front or rear	C
Right—front or rear	R
Side front—left or right	F
Side center section—left or right	P
Side rear—left or right	B
Side or end—F + P or L + C	Y
Side or end—B + P or R + C	Z

FIG. 4

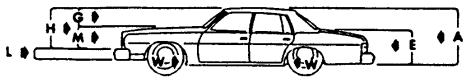

Vertical Location—Front, Rear, or Side Impacts	Classification
All	A
Top of frame to top of vehicle	H
Everything below belt line	E
Belt line and above	G
Middle—top of frame to belt line or hood	M
Frame—top of frame, frame, bottom of frame (incl. undercarriage)	L
Below undercarriage level (wheels and tires only)	W

FIG. 5A

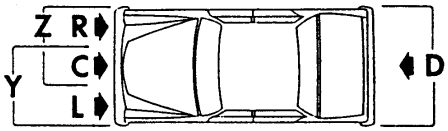

Lateral Location—Top and Undercarriage Impacts	Classification
Distributed	D
Left	L
Center	C
Right	R
L and C	Y
R and C	Z

FIG. 5B

"S" is used to classify these types of damage:

1. an impact which overlaps the corner of a vehicle by 4 in or less and then swipes along the surface parallel to the direction of travel;
2. a classical sideswipe; and,
3. a classical endswipe.

"A" is used to classify impacts where the vehicle deformation resulted from an overhanging structure shaped like an inverted step in which the vertical surfaces are at least 30 in (760 mm) apart. *Both vertical surfaces* of the inverted step *must* have contributed to the direct damage. The resultant damage patterns do not have to occur simultaneously, but must be caused by the same struck object. An example of this circumstance is underriding the rear of some large trucks.

"K" is used to classify impacts where a vehicle deformation pattern sustained during a single continuous impact sequence resembles two distinct impact types (that is, front and side). Use of the character is limited to those deformation patterns where an initial wide contact area ("W") converts to another impact type (generally sideswipe). For these deformation patterns, character "K" is substituted for "W" and a second Collision Deformation Classification (CDC) is required to describe the remaining damage (see Appendix).

"U" is used to classify impacts where no residual deformation of the vehicle is noted. An extent code of "1" in Column 7 must be used with this character.

The use of "S", "O", "A", "E", "K", and "U" takes precedence over "N" and "W". "W" and "N" are used to distinguish between large and small areas of deformation which do not fall into one of the other six categories. If an area is less than 16 in (410 mm) wide, or less than 6 in (150 mm) high, "N" is the appropriate classification. For small rectangular or circular areas of deformation, if the perimeter is less than the perimeter of 64 in (1626 mm) use the "N"; otherwise, use "W".

2.6 Column 7: Deformation Extent—The extent of residual deformation is classified using a nine-zone extent system as shown in Figs. 6–9. Figs. 6–9 are illustrative of passenger cars, station wagons, vans, and pick-ups, respectively. Extent zones are applied to front, rear, side, top, or undercarriage deformation, and should be selected so that they are compatible with the principal damage selection in Column 3.

To achieve uniformity, the deformation extent zones have been established in relation to specific points on the vehicle.

If the passenger compartment is involved in the *top* damage, then the extent number should reflect the extent of damage to the passenger compartment. This is true even if the hood or deck lid are involved.

If the distance from the rearmost point of the vehicle to the top of the rear window (backlight) is greater than the distance from the top of the rear window to the front door latch pillar (start of Zone 9), then use the *passenger car* deformation rear extent zone guide for classifying rear deformation. Other vehicles are classified using the rear extent guide for station wagons and vans.

THE EXTENT NUMBER SHOULD NOT BE USED AS A TOOL FOR DETERMINING THE COLLISION SEVERITY OR ENERGY REQUIRED TO DUPLICATE THE DAMAGE. FOR VEHICLES OF THE SAME BASIC TYPE, IT DOES SERVE AS A TOOL FOR GATHERING TOGETHER VEHICLES WHICH HAVE SIMILAR DAMAGE CHARACTERISTICS.

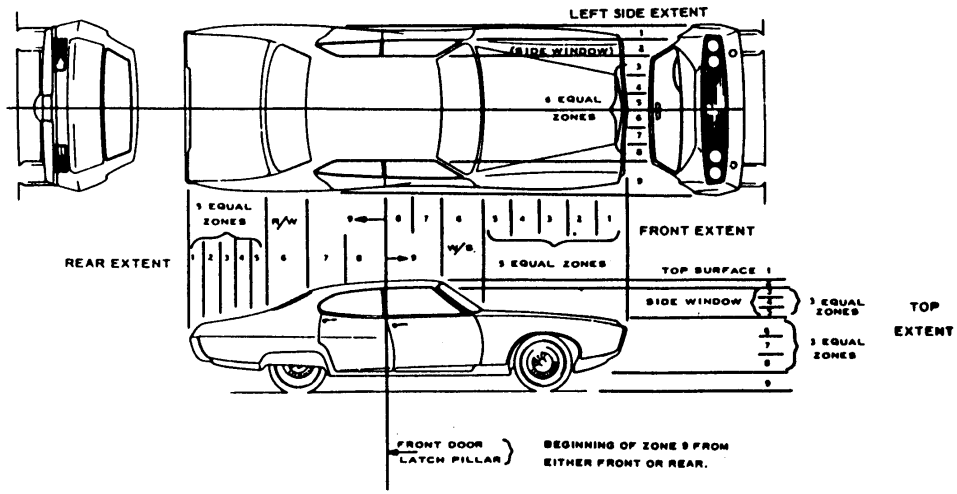

FIG. 6—DEFORMATION EXTENT ZONES (FOR PASSENGER CARS)

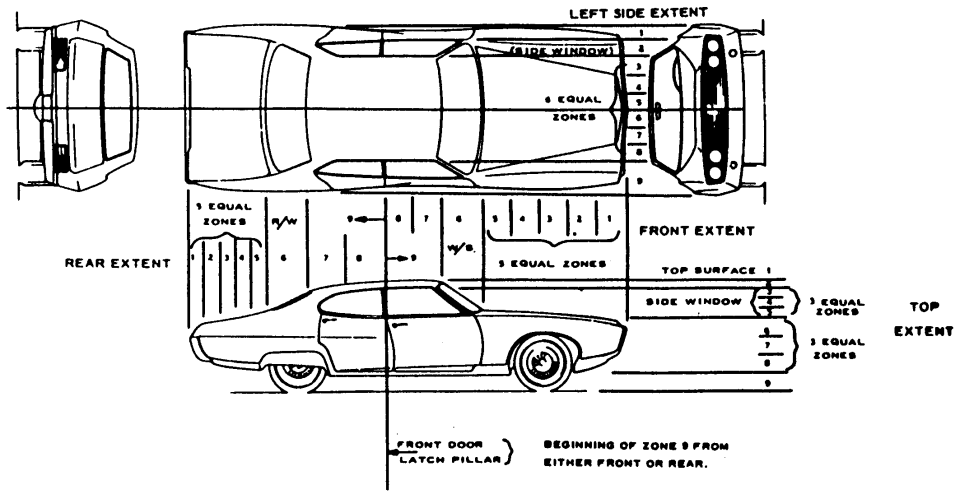

FIG. 6—DEFORMATION EXTENT ZONES (FOR PASSENGER CARS)

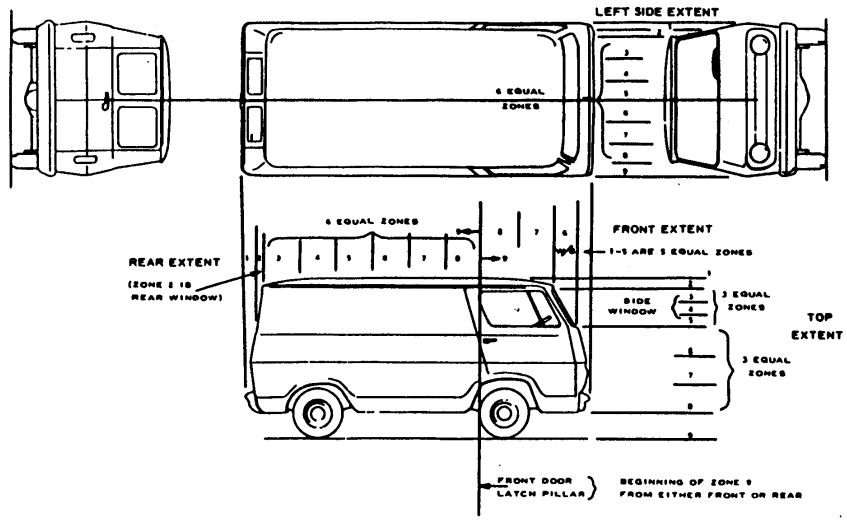

FIG. 8—DEFORMATION EXTENT ZONES (FOR VANS)

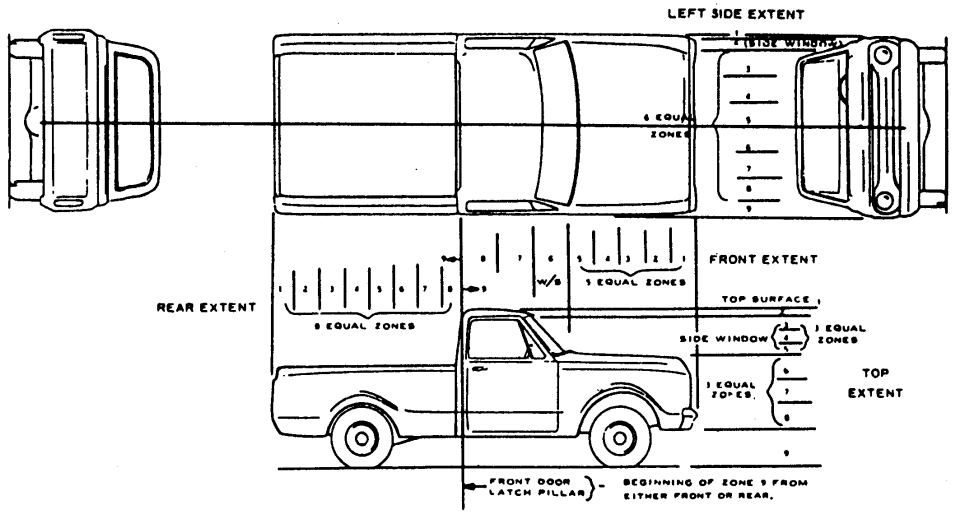

FIG. 9—DEFORMATION EXTENT ZONES (FOR PICKUP TRUCKS)

APPENDIX

Introduction—The Appendix is auxiliary and supplemental to SAE Recommended Practice J224 MAR80, "Collision Deformation Classification". The Appendix is intended as an aid to facilitate the use of J224 MAR80 and promote uniform interpretation of difficult or commonly misused classifications. The latter objective is achieved by providing explanation of the concepts inherent in the recommended practice and specific sections contained therein. Subdivisions of the Appendix are numbered to correspond with sections of the recommended practice. The Appendix does not include all possible situations which could and do occur in the field. The recommended practice, therefore, is the final document from which all classification decisions should be made.

J224 MAR80 differs considerably from J224a; however, the revised system does not render J224a classifications obsolete. J224a and J224 MAR80 files are compatible since the new classifications of J224 MAR80 can be collapsed for comparative purposes. Other differences between the two recommended practices consist of improved definitions in J224 MAR80 for more consistent application.

Individuals working with J224 MAR80 may be categorized as either *classifiers* or *users*. *Classifiers* are defined as individuals who make the original assessment of a CDC (Collision Deformation Classification) from firsthand inspection of the vehicle, and/or photographs, and/or sketches. This category includes individuals who check or edit original assessments. *Users* are defined as individuals who examine the assessments (in individual form or as mass data) made by *classifiers* to evaluate or compare types or groups of damage. *Both categories of individuals must have a consistent understanding of J224 MAR80 to apply it correctly.*

Damage patterns, where subjective evaluations are likely to occur, should be recognized by users to permit appropriate interpretation in the examination and application of these classifications. Appendix sections contain cautionary notes to the users at the end of each section pertaining to codes for that column of the CDC expression. Since CDC classifications are a descriptive composite of the damaged vehicle, the user is also cautioned not to separate code or column features. The latter practice very often results in inadvertent errors. For example, in searching for the "F's" in Column 3, the user may assume that since the frontal area of the vehicle is involved, all occupant kinematics will be parallel to the longitudinal axis of the vehicle. However, the "F" character in Column 3 does not preclude lateral forces (for example, 9 o'clock) which can cause occupant kinematics to become lateral, rather than longitudinal.

A task group of the Accident Investigation Practices Subcommittee will process interpretation requests related to J224 MAR80 or this associated Appendix. Interpretation requests involving specific CDC classifications should include photographs of the vehicle damage taken at right angles to each other, a description of the collision configuration, the problem, and the classification assigned by the individual or group submitting the request. Address all requests to:

Accident Investigation Practices Subcommittee of the Motor Vehicle Safety Systems Testing Committee
Interpretation Task Group
Society of Automotive Engineers
400 Commonwealth Drive
Warrendale, PA 15096

A1. Purpose and Scope—It is important to note that vehicle damage specified for classification in J224 MAR80 is limited to contact damage as opposed to induced damage. Contact damage is defined as all damage sustained in the vehicle area physically touching or in contact with the striking/struck, object/vehicle. Induced damage is all damage sustained beyond the limits of the contact area (that is, all non-contact damage).

Due to recent advances in the field of accident reconstruction, there is increasing pressure to include induced damage in damage classification systems. With certain impact types, for example, it is necessary to measure and report contact and induced damage to obtain an accurate reconstruction of accident events. Reconstructionists would prefer to note these additional measurements in the classification system and thereby achieve uniformity between the areas of reconstruction and damage reporting. In the area of reconstruction, however, induced damage is not uniformly reported. Induced damage is not required for certain impact types and is non-existent in others (that is, frontal impact with contact extending across the entire front). As a result, induced damage does not provide a firm basis for comparison. If reporting of induced damage is necessary for reconstruction, it must be reported separately and independently of direct contact damage.

The primary reason for not including induced damage in the classification system, however, is not related to uniformity of current reporting techniques. The criterion of using contact damage has been continued in J224 MAR80 in order to maintain continuity with J224a and previous classification systems. It is extremely important that data collected in current and future studies have a firm basis of comparability, over time, with previous studies.

A2. Classification of Collision Damage—To obtain a more complete understanding of the intent of the classification system, it may be of assistance to visualize the vehicle as being contained within or surrounded by a rectangular box. Impacts are classified according to the sides or planes of the box onto which they are most appropriately projected. For example, the two ends of the

TABLE A-1

Column 3		Orthogonal Axes		
Classifications	Projected Plane	Column 4	Column 5	Column 7
"F" or "B"	Lateral-Vertical	Lateral	Vertical	Longitudinal
"L" or "R"	Longitudinal-Vertical	Longitudinal	Vertical	Lateral
"T" or "U"	Horizontal	Longitudinal	Lateral	Vertical

vehicle (that is, the front and rear) are contained within lateral vertical planes of the box, the two sides within longitudinal vertical planes, and the top and undercarriage within horizontal planes. Column 3 of the classification system specifies which plane of the box is involved. An "F" character in Column 3, therefore, indicates the frontal, lateral-vertical plane.

Column 3 in J224 MAR80 also defines a three-dimensional, orthogonal set of axes which should guide the coder in completing Columns 4, 5, and 7. The damaged area is classified in Columns 4 and 5 along two orthogonal axes in the projected plane of deformation (that is, appropriate surface of box) as specified by Column 3. For example, in a frontal impact, the projected plane of deformation is the lateral vertical plane (that is, front surface of box). Columns 4 and 5 provide additional description, indicating the extent of

lateral and vertical involvement within the frontal plane. The deformation extent is classified in Column 7 along an axis perpendicular to the projected plane of deformation. These relationships are summarized in Table A-1.

General Notes: There are several aspects of the Collision Deformation Classification System which are related to general usage patterns rather than individual codes or columns. These areas are noted below:

A. Primary and Secondary CDC Designations—In cases of multiple CDC classifications to the same vehicle, specific classifications receive a designation of primary or secondary on the basis of the following guidelines (listed in a descending order of priority):

1. Energy management considerations—The CDC classification describing that impact which absorbed the greatest amount of energy or which resulted in the greatest amount of energy dissipation is designated the primary CDC. All other classifications are designated as secondary.

2. Greatest change in occupant space—If two or more classifications are approximately equal with respect to energy management considerations, the classification associated with the greatest change in occupant space is designated as the primary CDC. All other classifications are designated as secondary.

B. Multiple Impacts in the Same Vehicle Area—If two or more significant impacts are located in the same area of the vehicle, these impacts should be described with a single CDC classification. The classification is based on the final appearance of the damaged area. In special situations, a second collision can be separated, if the first damage is still identifiable; for example, a second collision of a narrow object upon a widely distributed first collision damage. If the impacts are separated, a CDC classification is assigned for the initial impact and an unknown CDC is assigned for the second impact.

C. Unknown CDC Classifications—If the damage pattern resulting from a specific impact is not defined, an unknown CDC classification is assigned. The appropriate expression is, "99-0000-0". The latter expression is intended for use in block form. That is, if a portion of the classification is unknown, the entire classification is considered unknown, and "99-0000-0" is used. *Do not, for example, attempt to use a classification of* "12-F000-0".

The vehicle must have been investigated or photographed to be classified. Estimations of partial or complete classifications from police reports, third-party descriptions, etc., are not permissible, because of the inaccuracies which can develop.

A2.1 Columns 1 and 2: Direction of Principal Force During Impact—These characters of a CDC expression define the force which produced the deformation pattern classified in the remaining columns. Definition, however, is related to the direction of force, rather than the magnitude of force. A paradox arises, in that the direction of force is an analytical quantity, usually determined on an analytical basis; however, for the CDC classification, it is always determined on a subjective basis. This is resolved by providing direction of force classifications containing 30 deg increments rather than smaller and more precise increments. A knowledge of vector addition is helpful for making Principal Direction of Force (PDOF) determinations.

A2.1.1 Force Vectors—The difference between scalar quantities and vector quantities is fundamental to an explanation of vectors.

A *scalar quantity* has only magnitude and can be added algebraically. Dollars, weights, time, distance, volume, etc. are scalar quantities. An example of algebraic addition, for example, $3\ ft^3 + 2\ ft^3 = 5\ ft^3$.

A *vector quantity* has *both* magnitude and direction, and must be added by geometric methods. Examples of vectors are: velocity vectors (for example, an airplane flying due north at 200 mph), displacement vectors (for example, a person walking 25 ft to the west), force vectors (for example, a 15 lb force

acting straight down on a nail).

The *resultant* of two or more vectors is that single vector which would have the effect of all the vectors acting together. Resultant vector determinations for Principal Direction of Force (PDOF) in this recommended practice will generally involve only two vectors.

The *equilibrant* of a number of vectors is that vector which balances all of the vectors together. It is equal in magnitude but opposite in direction to the *resultant*, This is also referred to as being colinear.

Parallelogram Method of Vector Addition. The resultant of two vectors acting at any angle may be represented by the diagonal of a parallelogram drawn with the two vectors as adjacent sides.

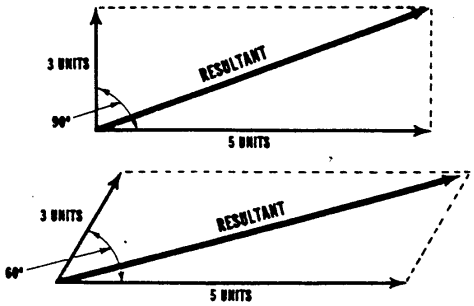

Vector Polygon Method of Vector Addition. This method of finding the *resultant* consists of drawing each vector to scale beginning at some arbitrary point. Each succeeding vector is drawn with the tail attached to the arrow end of the previous vector. The line drawn to complete the triangle or polygon is equal in magnitude to the *resultant*. The *resultant* is represented by the straight line directed from the tail end or starting point of the first arrow to the arrow end of the last vector added.

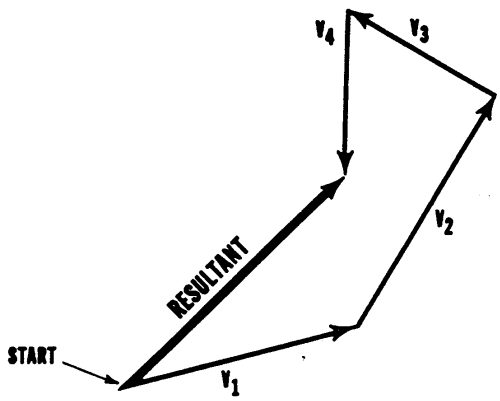

A2.1.2 Determination of Principal Direction of Force Using Vectors—Although *classifiers* generally do not *calculate* direction of force assignments, it is important to understand the basic theory associated with these columns. A brief theoretical discussion is provided below, followed by a discussion of how direction of force is determined in the field.

Theory: The force assessments used with CDC classifications are vector quantities. That is, they are the resultant of all impact forces acting on the vehicle during the contact sequence. As vector quantities, impact forces have both magnitude (algebraic product of Mass × Acceleration) and direction. With respect to force analyses, these properties may be represented by scaled linear arrows. The length of the arrow indicates the magnitude of force and the direction of the arrow indicates the direction of force.

The *length* of force arrows for a large truck and a small car traveling at the same speeds would be considerably different due to the mass (weight) differences. Likewise, two vehicles of equal weight but different speeds would have different *length* force arrows proportional to the speeds.

Fig. A-1 demonstrates *simplistic* vector analyses for a typical 90 deg intersection impact configuration. Note that required computations are not shown. Assume that all force arrows are correctly scaled representations of the amount or magnitude of force produced.

Schematic "a", in Fig. A-1, depicts the impact configuration (zero steer angle and tracking characteristics are assumed for both vehicles). Schematic "b", demonstrates parallelogram analysis of the forces exerted on Vehicle No. 1 and No. 2 during the impact sequence. In each case, F_N is the component of force which acts, or is exerted normal (that is, perpendicular) to the contact surface, and F_T is the component of force which acts tangentially to the contact surface (F_T is related to the frictional or pocketing interaction between contact surfaces). The arrows or vectors F_{R1} and F_{R2} are the resultant forces acting on Vehicle No. 1 and No. 2, respectively. Note that the equilibrant to the resultant on one vehicle is also the resultant for the other vehicle. Both

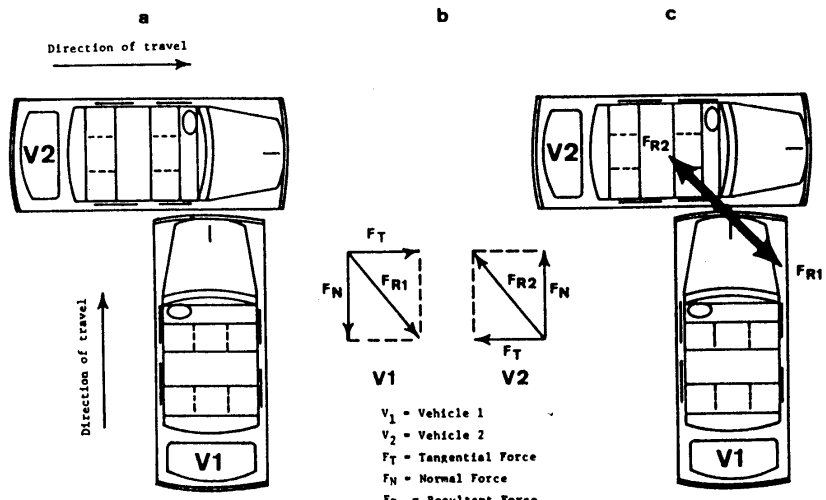

V_1 = Vehicle 1

V_2 = Vehicle 2

F_T = Tangential Force

F_N = Normal Force

F_{R_1} = Resultant Force for Vehicle 1

F_{R_2} = Resultant Force for Vehicle 2

FIG. A-1

vehicles respond to these forces. That is, the vehicles follow post-impact trajectories determined or influenced by the resultant directions of force (assuming that snagging and spinout phenomena are minimal).

The quantities F_{R1} and F_{R2} are shown in Schematic "c" as they apply to each vehicle. The angular position of the arrow is determined by acceleration characteristics of both vehicles. It can be rotated in either a clockwise or counter-clockwise direction by altering these characteristics for the respective vehicles. The direction of the forces, F_{R1} *and* F_{R2}, *are coded in CDC classifications for these vehicles* (after translation to the appropriate 30 deg sectors of the clock face).

Note in Schematics "b" and "c", that the resultant forces acting on Vehicle No. 1 and No. 2 are equal in magnitude and opposite in direction. *In any given impact sequence involving two vehicles, the resultant directions of force must be colinear.* That is, the resultant directions of force must be 180 deg opposed. Although these statements represent extensive simplification of complex events, they are merely a restatement of Newton's Third Law. For the purpose of achieving uniform CDC applications, the concept of colinearity should be maintained.

Application: It is difficult to compute accelerations during vehicle field inspections and/or if all the accident involved vehicles are not available. Resultant directions of forces are, therefore, assigned to each vehicle on the basis of subjective evaluations. The investigator, however, should examine all available inputs to assure the highest possible degree of accuracy for force assignments. Indicators of the direction of force are available in each area of investigation in the following respects, which have equal importance:

A. Human—Occupants respond to the resultant direction of force acting on the vehicle. Documentation of occupant trajectories, therefore, allows assessment of the relative direction of force (that is, 180 deg opposing to the occupant path of travel). Caution is required when determining the effects of post-impact vehicle rotation.

B. Environment—Primary indicators of relative directions of force are pre- and post-impact vehicle trajectories (including vehicle attitudes on these trajectories). As noted previously, vehicles respond to resultant direction of force produced by the impact. Documentation of trajectories allows the investigators to make assessments of the relative components of force associated with each vehicle, and, therefore, acting on each vehicle.

C. Vehicle—The primary indicator of the direction of force is the direction of sheet metal crush and vehicle bending. Estimate the relative angle of the crush pattern with respect to the longitudinal axis of the vehicle. Caution is required in interpreting crush patterns associated with vehicle rotation following maximum engagement.

A2.1.3 Shifting of Vehicle Structure—Shifting of a vehicle structure is defined as a change in direction of the structure as opposed to (or in addition to) crushing of the structure. Classification of shifting permits a more complete description of a damaged vehicle and is combined with the direction of principal force for conciseness. Classifications previously assigned in accordance with J224a remain valid since current classifications may be collapsed to that format. Structural shifting is classified in the following respects:

End Structure Shifting: Vertical or lateral shifting of vehicle and structures which occurs during a horizontal force application is noted in those instances where the amount of shifting is 4 in (100 mm) or greater (see Fig. A-2). Determination of the amount of shifting is made at the end structure locations. The basic rule to remember is: the direction of force classification is incremented, depending upon the type of shifting, by the addition of 20, 40, 60, or 80 to the horizontal direction of force determination. For example, the direction of principal force for a frontal impact at 12 o'clock is classified "12" if there is less than a 4 in (100 mm) shift of the forward end of the chassis frame rails or equivalent structure in either the vertical or lateral planes (Note: Bumper movement may not be an accurate indicator of basic structure

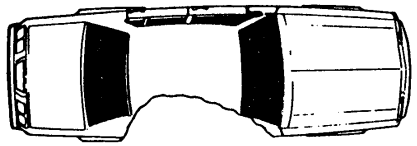

NO END SHIFTING

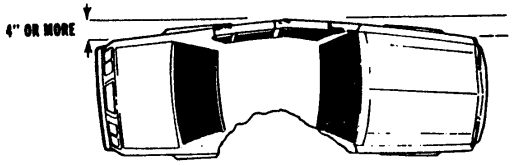

END SHIFTING, OR "BOWING"

FIG. A-2

movement). If the forward end of the chassis frame rails or equivalent structure is shifted beyond the limit of 4 in, the direction of force is incremented to indicate the direction of shift, but not the amount. For the example noted above (that is, 12 o'clock direction of force), vertical shifting is indicated by the classification "32" (that is, add "20") if the basic movement is upward, or, the classification "52" (that is, add "40") if the basic movement is downward. Lateral shifting is indicated by classification "72" (that is, add "60") for movement to the right, or the classification "92" (that is, add "80") for movement to the left.

For front or rear impacts, the impact site should also shift the required minimum distance of 4 in (100 mm) before the direction of force is incremented.

It is extremely important to differentiate between the concepts of crush and shifting. For example, in a 3 o'clock impact to the right passenger compartment area, the right doors and right "B" pillar may be crushed to the left. The direction of force classification "03" is *not* incremented to code "63", however, unless there is a relative shifting of the basic end structures to the right, producing a bowing effect in the vehicle that is 4 in (100 mm) or greater (see Fig. A-2). This bowing effect can be determined by examining the left side of the vehicle.

For those cases where shifting occurs in both the vertical and lateral planes, record the direction of shifting on the basis of the most obvious movement. If shifting in the lateral plane is greater than shifting in the vertical plane, record lateral shifting. If shifting in these planes is equal, give preference to the vertical plane (that is, record vertical shifting).

Top Structure Shifting; Recording longitudinal or lateral shifting of the top structure is reserved for the circumstance of non-horizontal force applications (00 o'clock). It is fully anticipated that shifting will also occur during instances of horizontal force applications; however, top structure involvement in horizontal force applications is adequately characterized within the current alphameric system (that is, Columns 3-6) and the direction of probable shift is adequately characterized within the "01-12" o'clock direction of force classifications (that is, Columns 1-2).

J224 MAR80 indicates that shifting of the top structure should be classified when visually apparent. As a practical guideline, the amount of shifting should be of an order of magnitude that can be detected in photographs or slides (that is, a shift of 1 in (25 mm) or more). In the latter circumstance, the direction of shifting is indicated by incrementing the non-horizontal force classification (that is, "00" by 20 upward, 40 downward, 60 to the right, and 80 to the left).

It is important to distinguish between the concepts of top crush and top shifting. If a heavy object is dropped directly on the top center area of the vehicle, the area will crush straight down. This action may result in the roof side rails shifting inward, the upper A-pillars shifting rearward, and the upper C-pillars shifting forward. The latter circumstance, however, would not be reported as shifting of the top structure. These are normal characteristics associated with a vertical crush pattern. Instances of shifting of the top structure should involve components of force in the longitudinal or lateral planes of the vehicle.

A2.1.4 User's Note—The directions of principal force are categorized into twelve sectors, each 30 deg in angle, and designated with the clockface numbers. A direction of impact force falling upon any one of the boundaries between clock sectors could be interpreted to be in either sector and still be essentially correct. For instance, an impact exactly 15 deg clockwise of straight ahead falls on the division between the 12 o'clock and 1 o'clock sectors. The

user should recognize that there are practical limits with which the direction of force can be assessed and deviations of as much as ±5 deg can occur in even expert judgments. Consequently, in the example given above, 12 or 1 o'clock would both be valid assessments. Therefore, when a user is searching for impacts within the 1 o'clock sector, some consideration should be given to examining similar classifications having a 12 o'clock or 2 o'clock direction of force.

A2.2 Column 3: Deformation Location and Classification Code—As noted in J224 MAR80, this character of a CDC classification broadly defines which area of the vehicle contains the contact deformation. The character is determined by using the projected area of initial contact or the surface or the vehicle which was initially struck or contacted. It is important to note that the area of initial contact is a projected area. Therefore, if the area of initial contact does not lie in one of the six indicated planes (that is, "F", "R", "B", "L", "T", or "U"), it must be projected to the appropriate plane. For example, assume that an automobile underrides the rear of a stopped truck, and the only resultant damage to the automobile involves contact to the windshield, (12 o'clock direction of force). Since the windshield does not lie within one of the designated planes, it must be projected to the appropriate plane; in this case, the frontal plane.

Relating this discussion to the six-sided box concept may provide additional insight as to the intent of Column 3. Remember that the vehicle may be viewed as being contained within a six-sided rectangular box. In this context, Column 3 is determined by which plane or side of the box is initially penetrated by the direction of force. For the example noted above, the 12 o'clock direction of force initially penetrates or *crosses* the frontal surface of the box. Therefore, the windshield damage is classified as "F" in Column 3.

Past experience has indicated that there are several impact configurations which are difficult to classify with respect to Column 3. A series of guidelines for each configuration has been developed to improve the consistency of classifications as follows:

Angled Horizontal Impacts (that is, 45 deg): Angled impacts (45 deg) initially involving the corner area and then extending into the front and side or rear and side area are difficult to classify. These impacts should be classified "F", "B", "L", or "R" in accordance with the following guidelines (listed in a descending order of priority):

(a) If the projected area of initial contact can be determined, use the appropriate character.

(b) If the projected area of initial contact cannot be determined, use the direction of principal force to determine the appropriate character. If the direction of force is less than 45 deg from the 12 o'clock or 6 o'clock directions, use "F" or "B". If the direction of force is greater than 45 deg use "L" or "R".

(c) If the direction of force cannot be determined with sufficient accuracy, use the projected area of greatest contact to determine the appropriate character. If the length of contact across the front or rear of the vehicle exceeds the length of contact along the side, use "F" or "B", respectively. Use "L" or "R" if the length of contact along the side is greater.

Rollover Configurations: Similar consideration should be given to top versus side deformation in a rollover sequence.[1] In the latter circumstance, however, principal emphasis is given to the projected area of primary contact (that is, area of greatest crush) rather than initial contact. Also, damage to the greenhouse area ("P" in Column 4) is given priority over other vehicle areas such as "F" and "B". Contact damage is classified in accordance with the following guidelines (listed in order of descending priority):

(a) If the projected area of primary contact can be determined, use the appropriate character.

(b) If the projected area of primary contact cannot be determined, use the angle of force in the vertical plane (above or below the horizontal clockface) to determine the appropriate character. If the direction of force is less than 45 deg from the vertical axis, use "T". If the direction of force is greater than 45 deg from the vertical axis, use "L" or "R".[2]

(c) If the direction of force cannot be determined with sufficient accuracy, use the projected area of greatest contact to determine the appropriate character. If the deformation area on the left or right side exceeds the deformation area on the top, use "L" or "R", respectively. Use "T" if the deformation area is greater on the top.

Undercarriage Impacts: The undercarriage classification ("U") available in Column 3 is most often associated with a non-horizontal ("00") direction of force in Columns 1 and 2. Horizontal directions of force ("01-12") are permissible; however, they are typically associated with a *sideswiping* action to the undercarriage. Impacts which result in *snagging* of undercarriage components (or vehicle undercarriage interaction with high decelerations in the occupant compartment environment), tend to produce significant vertical components of force, and the "00" classification should be used. As a basic guideline, use the "00" classification whenever the resultant direction of force is 15 deg or greater from the horizontal plane of the vehicle, for undercarriage involvements.

Wheel and Tire Impacts: As noted in J224 MAR80, impacts to tires and wheels are excluded from the undercarriage classification. For these impacts, the characters, "F", "L", "R", or "B" are used in conjunction with the character "W" in Column 5. The specific deformation location is determined by the projected area of initial contact (that is, impact to front tread area of right front tire is assigned an "F" character). Extent zone classifications (Column 7) are assigned in the normal manner (that is, they are referenced to the plane of the first letter).

As a practical guideline, do not assign a CDC classification to these impacts unless resultant damage is noted (that is, blowout, rim deformation, etc.). It should also be noted that most CDC classifications assigned to tire and/or wheel impacts will be secondary to other impacts the vehicle sustains.

A2.2.1 User's Note—For vehicles with similar damage patterns, there should be no differences in Column 3 without one classification being in error. Although angled impacts and rollovers are sometimes difficult to classify with respect to determining which area of the vehicle contains the contact damage, guidelines provided in this document should result in consistent interpretations.

[1] In general, one CDC classification is assigned to a rollover sequence, regardless of the number of rolls.

[2] "F" or "B" may also be used to describe the damage in end-over-end rollovers.

A2.3 Column 4: Specific Longitudinal or Lateral Location of Deformation and Classification Code—This character of a classification expression defines the longitudinal or lateral area containing the deformation. As with Column 7, the basic method requires a mathematical interpretation for a number of the indicated areas (that is, "L", "C", "R", "Y", and "Z" for front or rear impacts). Other areas (that is, "P" in side impacts) are defined in J224 MAR80 with respect to specific points on the vehicle for various vehicle and body style types. Since "P" is defined in the latter circumstance, other related areas (that is, "F", "B", "Y", and "Z" in side impacts) vary with "P" and are not considered to be defined mathematically. All areas, whether determined mathematically or defined by J224 MAR80, have finite limits which are intended as the absolute boundaries for that area. Therefore, if contact damage extends beyond the indicated boundary of a specific area, that character should not be used for the CDC classification. For example, "L", "C", and "R" are equal thirds on the front or rear of the vehicle. If an impact to the left frontal area of a vehicle involves more than the indicated width of "L", "Y" should then be used, instead of "L".

Contact deformation is not required to extend across the entire area defined by a specific character for that character to be considered a valid assignment. For example, in frontal impacts, the "Y" and "Z" characters designate the left and right two-thirds of the vehicle, respectively. The entire "Y" and "Z" areas do not have to be deformed before these characters may be used, as long as the damage is contained within "L" and "C" for "Y"; and "R" and "C" for "Z". Thus, a narrow front impact in the right frontal area which overlaps both the right ("R") and center ("C") thirds may be classified "FZEN". The corresponding classification for a narrow impact in the left frontal area, overlapping the left and center thirds is, "FYEN". Similar consideration should be given to top, side, rear, and undercarriage impacts.

A2.3.1 User's Note—Some differences may exist between the selection of the character "Y" versus an "F" or "P" in side impacts, or a "Z" versus a "C" or an "R" in frontal impacts. Although the intent of J224 MAR80 is to create absolute boundaries for all areas, minor variance is permitted in recognition of measurement error tolerances and the necessity to obtain a *best fit* description of vehicle damage. Error tolerances in vehicle measurement techniques are on the order of 1 in (25 mm). Therefore, if contact damage in a frontal impact exceeded the width of area "R" by 1 in (25 mm) or less, for example, then both "R" and "Z" would be considered correct classifications. The "R" character in this circumstance may be preferred, since it describes the appearance of the width of damage area more accurately than does "Z".

A2.4 Column 5: Specific Vertical or Lateral Location of Deformation and Classification Code—As indicated by the paragraph title, this character of a classification expression defines either the vertical *or* lateral area containing the deformation. In J224a, Column 5 was limited to describing the vertical location only. This column, therefore, represents the most pronounced change between J224a and J224 MAR80. Examination of Table 1 reveals why the change was required. In J224a, with Column 5 always indicating the vertical axis, there was a non-uniform description of contact damage. In four of the possible six impact locations specified by Column 3 ("F", "B", "R", or "L"), damage was described in a three-dimensional axis system (lateral, longitudinal, and vertical) in Columns 4, 5, and 7. However, for the two remaining impact locations ("T" and "U"), damage was described in only a two-dimensional axis system (longitudinal and vertical) in Columns 4, 5, and 7. Column 5 was, therefore, changed to allow reporting of damage along the lateral axis for "T" or "U" impact locations in Column 3. In J224 MAR80, all contact damage is described in a three-dimensional orthogonal axis system in Columns 4, 5, and 7.

The vertical location classifications are "A", "H", "E", "G", "M", "L", and "W". The "W" character is reserved for tire and wheel impacts and must be used in conjunction with an "F", "B", "L", or "R" in Column 3. Characters "A", "H", and "E" in Column 5 are combinations of "G", "M", and "L", as follows:

$$A = G + M + L$$
$$H = G + M$$
$$E = M + L$$

The lateral location classifications are "D", "L", "C", "R", "Y", and "Z". These characters have been transferred to Column 5 from Column 4 and retain all definitions associated with Column 4 (that is, "R", "C", and "L" are equal thirds, etc.).

User's Note—Caution must be exercised when comparing Column 5 of CDC classifications generated in accordance with J224a and CDC classifications generated in accordance with J224 MAR80. There are two different "L" characters in Column 5 of J224 MAR80; one for lateral location classifications when Column 3 is "T" or "U", and one for vertical location classifications when Column 3 is "F", "B", "L", or "R". Neither "L" is identical to the "L" of Column 5 in J224a.

The first "L" (lateral axis) referred to in preceding paragraph, is new in Column 5 and designates Top, "T", or Underside, "U", damage within the left ⅓ of either of the "T" or "U" projected lateral surfaces.

The second "L" (vertical axis) designates "F", "B", "L", or "R" damage in a vertical area around the vehicle defined by the top of frame, frame, and bottom of frame including projecting undercarriage structure but excluding wheels. Vehicles without frames are assumed to have equivalent structure in the same general area as vehicles with frames and the vertical "L" areas are treated in the same manner. Undercarriage locations are designated elsewhere in the expression so the redundant "X" character was dropped. A "W" was added to permit description of damage exclusively to the wheels.

A2.5 Column 6: General Type of Damage Distribution and Classification Code—This character of a classification expression provides a qualitative description of the type of damage sustained by the vehicle. Use of the damage distribution characters is illustrated with the following definitions:

To differentiate deformation which includes the corner of the vehicle is longitudinal and lateral impacts, use the "S", "E", or "W" classifications. The examples in Table A-2 describe impacts at the right front corner. Note that the FRES classification and associated definition are not intended to describe a sideswipe. This specific classification describes a narrow frontal impact occurring at the corner area.

TABLE A-2

Classification	Maximum Width of Deformation From Side Surface
—FRES-	>0–4 in (100 mm)—principally sheet metal
—FREE-	>4–16 in (100–410 mm)—wheel and suspension
—FREW-	>16 in (410 mm)—wide area

In Table A-2, it should be noted that the "E" or corner classification in Column 6 must involve the corner area of the vehicle. The contact pattern must initiate or end at the corner, and then extend for more than 4 in (100 mm), but not more than 16 in (410 mm), across the end or along the side of the vehicle. "N" may also be used following "FRE" in this example if the contact area does not include the corner, and if it satisfies the previous criteria for "N" (that is, 16 in (410 mm) or less in width).

Columns 3–6 of CDC classifications are used for clarification. Fig. A-3 shows the three types of damage patterns given in Table A-2; three similar damage patterns to the right front side; and six corresponding damage patterns to the left rear corner area. The indicated classification system is appropriate for deformation at any corner of the vehicle, and for directions of principal force from the front, rear, or side directions.

The "S" character may be used in three distinct types of impacts defined as follows:

A. Narrow End or Side Engagement—This damage configuration is shown in Fig. A-3 as "FRES", "RFES", "BLES", and "LBES". For this impact type:

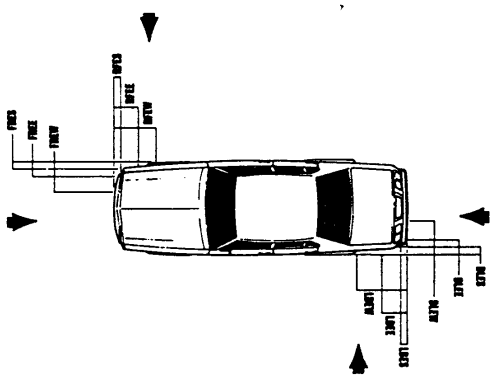

FIG. A-3

1. Initial engagement is 4 in (100 mm) or less at the end or side surface starting at the corner.

2. The direction of force is within 30 deg of either the longitudinal axis (end engagement) or lateral axis (side engagement) of the vehicle.

3. The engagement pattern subsequent to the initial contact area exhibits sideswipe characteristics (that is, no pocketing).

With the "FRES" classification, that is, for example, initial frontal engagement does not extend beyond a point located 4 in (100 mm) to the left of the front right corner, the direction of force is within 30 deg of the longitudinal axis of the vehicle, and the impact does not pocket in the front suspension area. If the latter circumstance (pocketing) does occur, the classification is more appropriately described as, "FREE".

B. Classic Sideswipe: For the classic sideswipe (that is, "RD_S" or "LD_S"):

1. There is no significant contact to the end structures (front or rear surface area).

2. The direction of force is within 30 deg of the longitudinal axis of the vehicle (11, 12, 1, or 5, 6, 7 o'clock directions).

3. The extent code (Column 7) does not exceed Zone "3".

4. The damage pattern along the side of the vehicle exhibits low deceleration potential (low energy dissipation characteristics).

The "S" character must be used in this circumstance. If a violation of the direction of force, extent zone, or damage pattern definitions occurs, the configuration is coded as a side impact, and the "S" character is not used.

C. Classic Endswipe: Similar consideration is given to the classic endswipe:

1. There is no significant contact to the side structure (that is, left or right side surface area).

2. The direction of force is within 30 deg of the lateral axis of the vehicle (that is, 2, 3, 4, or 8, 9, 10 o'clock).

3. The extent code (Column 7) does not exceed Zone 3 for vans front or rear) or station wagons (rear) and Zone 1 for other body styles.

4. The damage pattern along the front (or rear) of the vehicle exhibits low deceleration potential (that is, low energy dissipation characteristics).

The "S" character must be used in the above circumstances. If a violation of the direction of force, extent zone, or damage pattern definitions occurs, the configuration is coded as a front or rear impact and the "S" character is not used.

The "O" character is used exclusively to describe rollover damage in Column 6. A rollover is defined as a rotation of at least 90 deg about either the longitudinal or lateral axis of the vehicle. *Only one rollover classification may be applied to a vehicle, in a specific accident sequence, regardless of the damage or number of rolls.*

If the "K" character is used, two CDC classifications are required to describe a single continuous impact. *This character is not intended for frequent use.* The primary intent of "K" is to describe those instances where an initial wide impact configuration changes to a second impact type, producing a step function deformation pattern. The impact configuration associated most frequently with this pattern is the wide frontal impact (that is, "FLEW", "FYEW", "FZEW", or "FREW"). As the frontal structure is collapsed rearward to areas of increased stiffness, vehicle rotation is induced. The latter mechanism results in a significant decrease in the width of the contact area as damage extends rearward. With an "FYEW" classification, the resultant damage pattern will appear as if the vehicle sustained an initial frontal impact, involving up to two-thirds of the frontal structure, followed by a sideswipe of the left side. Two CDC classifications are required to describe this damage accurately. The "W" character is replaced with a "K", changing the "FYEW" classification to "FYEK". A second CDC, such as "LYES", is used to describe the sideswipe damage.

Note that the "S" character in Column 6 is generally used in the second CDC. The second damage pattern, however, may occasionally be better represented by a side impact classification rather than a sideswipe.

USER'S NOTE—The "K" character discussed above was not available in J224a. It is, however, directly comparable to the "W" character in either J224a or J224 MAR80. The "K" character has the same connotation as the "W". The major significance of "K" is that it indicates that two CDC classifications have been assigned to the subject vehicle. Unlike other instances of multiple CDC assignment, however, the CDC's assigned to the subject vehicle did not occur in separate impacts. Whenever the "K" is used, two CDC classifications have been assigned to a single continuous impact sequence.

A2.6 Column 7: Deformation Extent—The extent zone is determined by dimensioning direct damage, parallel to the measurement axis specified by Column 7 of the CDC. This axis is always perpendicular to the orthogonal plane specified by the first alphameric character (that is, Column 3) of the CDC (see Table A-1). It is *incorrect* to use the direction of force to determine the direction of the crush measurement. If "F" is selected for Column 3, crush is measured parallel to the longitudinal axis of the vehicle, even if the direction of force is 3 o'clock. If "L" is selected for Column 3, the measurement used to determine the extent is made parallel to the lateral axis of the vehicle. The *furthest* undamaged area of the vehicle is used as a reference for dimensions. Crush measurements are obtained by noting the difference between damaged and undamaged dimensions (crush measurements with respect to CDC application are concerned with direct contact damage and are not to be combined with induced damage noted for many impact configurations). *Crush and extent do not necessarily describe the same point on the vehicle. Extent is a mathematical determination of which zone the crush extends into, beginning with Zone 1.* For example, a crush determination of 14 in (355 mm), with a CDC of 12-FDEW_ for a vehicle with the first 5 zones of 12 in (305 mm) each, is classified with an extent Zone "2" (12-FDEW2). However, a crush determination of 11 in (280 mm), with a CDC of 12-FDMW_ for the same vehicle zone lengths, is classified with an extent Zone "1", even though the crush may end at the same distance from the rear reference as the 14 in (355 mm) measurement noted above.

Upper body vehicle structure (that is, "G" in Column 5) damage, such as 12-FDGW_, has extent codes beginning at Zone 6 and is not treated in the same manner.

Extent zones are defined in Figs. 6–9 of J224 MAR80. Note that front, side, and top extent zone definitions are uniform for all vehicle types, as follows:

EXTENT TYPE	ZONE(S)	DEFINITION
FRONT	1-5	Five equal zones determined along the centerline by dividing the longitudinal distance from the front most point of the vehicle to the center of the base of the windshield by "5".
	6	Longitudinal width of windshield.
	7–8	Two equal zones determined by dividing the distance between the windshield top molding and the front door latch pillar (that is, B-pillar) by "2".
	9	Contains all crush extending rearward of the front door latch pillar.

SIDE	1	Lateral distance between maximum side protrusion and base of side glass.
	2	Lateral distance between base of side glass and top of side glass.
	3–8	Six equal zones determined by dividing the lateral width of the top (side rail to side rail) by "6".
	9	Contains all crush extending beyond the side rail opposite of the impact location.
TOP	1	Surface scratching and abrading.
	2	Vertical distance between the top surface and the side rail.
	3–5	Three equal zones determined by dividing the vertical height of the side glass by "3".
	6–8	Three equal zones determined by dividing the vertical distance between the base of the side glass opening and lower edge of the rocker panel by "3".
	9	Contains all crush extending below the level of the rocker panel.

Although not specifically stated in J224 MAR 80, Undercarriage Extents are determined by reversing extent codes for the Top Extent. Zone 1 is surface scratching and abrading of the undercarriage components; Zone 2 is Top Extent Zone 8; Zone 3 is Top Extent Zone 7, etc. Rear Extent Zones vary with vehicle type and are determined as follows:

VEHICLE TYPE	EXTENT TYPE	ZONE(S)	DEFINITION
PASSENGER CAR	REAR	1-5	Five equal zones determined by dividing the longitudinal distance between the center of the rear bumper and the center of the base of the backlight by "5".
		6	Longitudinal width of the backlight.
		7–8	Two equal zones determined by dividing the distance between the backlight top molding and the front door latch pillar (B-pillar) by "2".
		9	Contains all crush extending forward of the front door latch pillar.
STATION WAG./VAN	REAR	1	Longitudinal distance between the center of the rear bumper and the base of the backlight.
		2	Longitudinal width of the backlight.
		3–8	Six equal zones determined by dividing the longitudinal distance between the backlight top molding and the front door latch pillar by "6".

		9	Contains all crush extending forward of the front door latch pillar.
PICKUP TRUCK	REAR	1–8	Eight equal zones determined by dividing the longitudinal distance between the rearmost projection (bumper, if installed) and the front door latch pillar by "8".
		9	Contains all crush extending forward of the front door latch pillar.

USER'S NOTE—For vehicles sustaining similar damage, the extent code may differ by one zone with very small differences in crush measurements (that is, fractions of an inch). Damage which occurs on a zone dividing line could be classified correctly by the code designating either zone. Also, if the damage is not extensive or significant in one of the two zones, that zone could possibly be overlooked by the classifier. These differences, although not intended, and not the general rule, should be of concern to the user, since they may exclude useful data.

APPENDIX C: OLDMISS USERS GUIDE

C.1 Overview

The Missing Vehicle Algorithm program can be used to reconstruct vehicle collisions and obtain delta-V estimates when complete damage measurements are available for only one of the two vehicles involved.

The program logic is based on several assumptions and procedures found in the CRASH3 program for accident reconstruction. The Missing Vehicle Algorithm can be applied, however, to cases which do not meet all of CRASH3's data requirements.

The algorithm of this model begins with a comparison of the known and unknown vehicle stiffness parameters. The applicable parameters are selected from a table of values contained in the CRASH3 program, according to a stiff-ness category specified by the user. The relative stiffness of the vehicle with measured damage and the unknown vehicle is determined according to the collision geometry to predict a damage pattern on the unknown vehicle, according to the physical principal that equal and opposite forces are experienced by the two colliding bodies.

After the program estimates a damage pattern for the unknown vehicle, the velocity changes undergone by each of the two vehicles are calculated using the CRASH3 logic, based on the plan view damage area, first moment of the damage area about the undeformed surface line, and the stiffness parameters A and B. The stiffness parameter G does not appear in tabular form within the program, but is calculated as a function of A and B as discussed in Section 2.2.3.

This program is based on two BASIC language programs developed by MGA Research Corporation under contract to the National Highway Traffic Safety Administration. These programs, entitled OBSCOL and FRCOL, are documented in Department of Transportation Publication No. DOT HS-805 742, Final Report on Contract No. DTNH22-80-C-07065. The purpose of the project was to increase the number of investigated accidents for which a delta-V could be estimated in the National Crash Severity Study. The aforementioned report should be consulted for additional technical background on the missing program algorithms.

OLDMISS bears a close relationship to the CRASH3 computer model for accident reconstruction. The vehicle stiffness parameters, the solution for

velocity change as a function of residual damage crush, and the conventions for measuring crash damage are identical to those used by CRASH3.

OLDMISS is an interactive FORTRAN language program. It is quite straightforward to operate, particularly for a user experienced in accident reconstruction or familiar with the CRASH3 program. The terminology has been selected to follow CRASH3.

The next section lists the data requirements of OLDMISS. General operating instructions are provided in Section 3. The is followed by a more detailed explanation of each input section in Section 4. Two sample runs are reproduced in Section 5 to serve as illustrative examples.

C.2 Data Requirements

This section details the data which is necessary to use OLDMISS successfully. Size and stiffness categories must be entered for both vehicles. Vehicle weights are desirable but not essential, since default values are stored by size category within the program. The approximate heading at impact of both vehicles must be known for proper program operation. The damaged area of each

vehicle must be specified to lie along one of the four vehicle surfaces--front, right, back, or left.

For the vehicle on which the damage has been measured, the conventional CRASH3 damage dimensions are required. These items include the damage width; the damage midpoint offset; the principal direction of force; and 2, 4, or 6 equally spaced crush depth measures.

For the missing vehicle, the one for which damage measurements are unavailable, an estimate of the damage midpoint offset must be made. A zero value is acceptable for this estimate.

The complete set of required data items is listed in Table C.1. Table C.2 is a sample data collection form which could be used to assemble the information required for a program run.

TABLE C.1

REQUIRED DATA ITEMS FOR OLDMISS APPLICATION

Item	REQUIRED FOR		
	Both Vehicles	Known Vehicle	Unknown Vehicle
Size Category	X		
Stiffness Category	X		
Heading Angles	X		
Damage Area (F, R, L, B)	X		
Damage Width (L)		X	
Damage Midpoint Offset (D)		X	
Crush Depth (C values)		X	
Estimated Damage Midpoint Offset (D)			X
Principal Direction of Force (PDOF)		X	

TABLE C.2

DATA COLLECTION FORM
PROGRAM OLDMISS

1. TITLE
2. VEHICLE SIZE CATEGORY #1 _____ #2 _____
3. STIFFNESS CATEGORY #1 _____ #2 _____
4. WEIGHTS (Ø IF UNKNOWN) #1 _____ #2 _____
5. HEADING ANGLES AT IMPACT #1 _____ #2 _____
6. DAMAGED AREA (F, L, R, B) #1 _____ #2 _____
7. FOR WHICH VEHICLE IS DAMAGE KNOWN? #1 OR #2
8. DAMAGE WIDTH FOR KNOWN VEHICLE _____ (INCHES)
9. NUMBER OF CRUSH MEASUREMENTS FOR KNOWN VEHICLE _____
10. ENTER CRUSH MEASUREMENTS FOR KNOWN VEHICLE
11. ENTER DAMAGE MIDPOINT OFFSET FOR KNOWN VEHICLE
12. ENTER PDOF FOR KNOWN VEHICLE _____ DEGREES
13. ESTIMATE DAMAGE MIDPOINT OFFSET FOR UNKNOWN VEHICLE

C.3 Detailed Instructions

This section explains how to answer each of the program's request for input. The text of each question is presented, followed by a brief explanation and any appropriate notes. The questions are treated in the order in which they are presented to the user at a terminal.

The conventions used to describe and measure vehicle damage are identical to those used by the CRASH3 accident reconstruction program.

ENTER AN IDENTIFYING TITLE

Up to 80 characters of any type may be entered to identify the particular case being processed. This title is printed at the beginning of the output listing.

ENTER A SIZE CATEGORY FOR EACH VEHICLE

The vehicle size category is an integer code which may range from 1 to 7. These codes denote groups of similar size vehicles which are considered to have similar dimensions for the program calculations. The size categories are patterned after the CRASH3 categories shown in Table 1.1.

ENTER A STIFFNESS CATEGORY FOR EACH VEHICLE

The vehicle stiffness category is used to place each vehicle into a group of vehicles sharing similar stiffness properties.

Enter an integer between 1 and 7 for each vehicle in the collision. Table 1.2 is a guide to selecting the appropriate category.

ENTER VEHICLE WEIGHTS, OR ZERO IN UNKNOWN

The vehicle weights, in pounds, should be entered. They may range from zero to 10,000 lbs. If a zero value is entered, or if the space is left blank, a default value will be substituted by the program. The default value selected is based on the size category previously entered. Note that in order to choose the default value for Vehicle 1 when a known value is entered for Vehicle 2, a zero must be entered for Vehicle 1. Thus, if the user responds:

?4100 , a default value will be selected for Vehicle 1. A blank résponse will generate default values for both vehicle weights.

ENTER VEHICLE HEADING ANGLES AT IMPACT, IN DEGREES

The vehicle heading angles are measured in degrees from any space-fixed reference coordinate system which is convenient to measure from. These values may range from 360 to -360 degrees. It is not necessary to use one vehicle heading as the zero reference, though this method often proves convenient.

ENTER A CODE FOR THE DAMAGED AREA OF EACH VEHICLE.

F = FRONT, L = LEFT, R = RIGHT, B = BACK

Enter the appropriate letter code for each of the two vehicles. These codes are identical to the third column of the Collision Deformation Classification (CDC) used by the CRASH3 program. Be careful not to confuse R (right side) and B (back or rear).

FOR WHICH VEHICLE IS THE DAMAGE KNOWN?

Respond to this question with a 1 or 2, depending on which vehicle the measured damage data is available for. The program results are listed in vehicle number order.

ENTER DAMAGE WIDTH IN INCHES FOR KNOWN VEHICLE

This measurement is identical to the damage width L used by the CRASH3 program. L is always positive and may be as large as the full width or length of the vehicle. Any width entered which exceeds the vehicle dimension on the damaged side by more than 10% will be rejected by the program logic. This 10% allowance is designed to allow for variation around the standard dimensions for each size category. Figure 1.18 ,displays the damage width measurement graphically.

ENTER NUMBER OF CRUSH MEASUREMENTS FOR KNOWN VEHICLE

Two, four, or six equally spaced damage depth measurements must be entered as input to the next question. Respond to this question with a number indicating the number of values which are available. If more values are entered than specified, the superfluous one will be ignored. If fewer values are entered than specified, the remaining values will be set to zero.

ENTER 4 CRUSH MEASUREMENTS FOR KNOWN VEHICLE.

Enter the proper number of crush measurements as indicated in response to the previous question. All values should be positive and entered in inches. These measurements are identical to the damage depth or C values used by the CRASH3 program. Figure 1.18 indicates the source of the C values.

ENTER DAMAGE MIDPOINT OFFSET FOR KNOWN VEHICLE

The damage midpoint offset refers to the distance in inches between the mid-point of the damage width and the midpoint of the vehicle surface on which the damage occurred. This value is signed with positive values running to the front and right halves of the vehicle surfaces. This value is identical to the D value employed by the CRASH3 program.

ENTER THE PRINCIPAL DIRECTION OF FORCE FOR KNOWN VEHICLE IN DEGREES, ($-360 \leq x \leq 360$)

The principal direction of force is measured in degrees, relative to the vehicle heading angle, as in the CRASH3 program. Positive and negative

values are equally acceptable in the range -360 to 360.

ENTER ESTIMATED DAMAGE MIDPOINT OFFSET FOR UNKNOWN VEHICLE

In response to this questions, the user must enter an estimate of the damage midpoint offset (D) value for the vehicle whose damage measurements are not available. The response should be in inches following the sign conventions mentioned above and diagrammed in Figure 1.18. If the estimated D value is such that the program-calculated unknown damage width would extend beyond a corner of the unknown vehicle, the entered D value will be adjusted to correct this discrepancy, and a message displaying the extent of the correction will appear in the program output. For this reason, it is not harmful to choose a D value which extended nearly to a vehicle corner, if it is suspected that the damage extended to that corner. When the adjustment is made to the D estimate, it will be set so that the estimated damage width extends exactly as far as the affected corner but not beyond.

OLDMISS Program Sample Run

```
ENTER AN IDENTIFYING TITLE
?malibu/pinto crash- pinto missing

ENTER A SIZE CATEGORY FOR EACH VEHICLE
?4 2

ENTER A STIFFNESS CATEGORY FOR EACH VEHICLE
?4 2

ENTER VEHICLE WEIGHTS, OR ZERO IF UNKNOWN
?4621 3082

ENTER VEHICLE HEADING ANGLES AT IMPACT, IN DEGREES
?-30 30

ENTER A CODE FOR THE DAMAGED AREA OF EACH VEHICLE
F = FRONT, L = LEFT, R = RIGHT, B = BACK
?f f

FOR WHICH VEHICLE IS THE DAMAGE KNOWN?
?1

ENTER DAMAGE WIDTH IN INCHES FOR VEHICLE 1
?46

ENTER NUMBER OF CRUSH MEASUREMENTS FOR VHEICLE 1
?6

ENTER 6 CRUSH MEASUREMENTS FOR VHEICLE 1
?4.0 5.5 7.0 10.2 12.1 14.8

ENTER DAMAGE MIDPOINT OFFSET FOR VEHICLE 1
?0

ENTER THE PRINCIPAL DIRECTION OF FORCE FOR
VEHICLE 1 (IN DEGREES, -360 < X < 360)
?30
```

```
ENTER ESTIMATED DAMAGE MIDPOINT OFFSET FOR
VEHICLE 2
?0

INPUT COMPLETE-- THANK YOU.

TYPE = 1 A = 233.7 94.9 B = 49.9  71.1

L,T1,T2,CVALS   22.96   5.25   1.41   26.06   22.26
19.59  15.09  12.98  10.87
CFIX = 0  0

ALPHA,F1,S1 = 30.000 -30.000  1.155  1.155 300.000

MISSING VEHICLE RECONSTRUCTION RESULTS

MALIBU/PINTO CRASH- PINTO MISSING

VEHICLE 1 DATA- FRONT DAMAGE KNOWN

SIZE CLASS:  4  STIFFNESS CLASS:  4
WEIGHT:  4621.0 LBS (2095.7 KG)

MASS:11.959 LB-SEC**2/IN (135.11 NT-SEC**2/CM)
RADIUS OF GYRATION:  3741.0 IN**2 (24135.4 CM**2)

DAMAGE LENGTH:  46.00 IN  (116.8 CM)
DAMAGE OFFSET:  0.0 IN (0.0 CM)

DAMAGE DEPTH:              IN          (CM)

            C1           4.0          10.2
            C2           5.5          14.0
            C3           7.0          17.8
            C4          10.2          25.9
            C5          12.1          30.7
            C6          14.8          37.6

HEADING ANGLE:  -30.0 DEG
PRINCIPAL FORCE ANGLE:  30.0 DEG
```

```
FORCE:  35841.6 LBS (159423.6 NT)
ENERGY:  24650.3 FT-LBS (33418.1 NT)

DELTA-V RESULTS            MPH        (KPH)
   RESULTANT:             12.37       19.90
   LONGITUDINAL:         -10.71      -17.24
   LATERAL:               -6.18       -9.95

VEHICLE 2 DATA- FRONT DAMAGE UNKNOWN

SIZE CLASS:  2   STIFFNESS CLASS:  2
WEIGHT:  3082.0 LBS (1397.7 KG)

MASS:  7.976 LB-SEC**2/IN (90.11 NT-SEC**2/CM)
RADIUS OF GYRATION:  2951.0 IN**2 (19038.7 CM**2)

ESTIMATED DAMAGE DIMENSIONS--

DAMAGE LENGTH:  22.96 IN (58.3 CM)
DAMAGE OFFSET:  0.0 IN. (0.0 CM)

DAMAGE DEPTH:              IN          (CM)

            C1          26.1          66.2
            C2          22.3          56.5
            C3          19.6          49.8
            C4          15.1          38.3
            C5          13.0          33.0
            C6          10.9          27.6

HEADING ANGLE:  30.0 DEG
PRINCIPAL FORCE ANGLE:  -30.0 DEG

FORCE:  35841.6 LBS  (159423.6 NT)
ENERGY:  34655.1 FT-LBS (46981.3 NT)

DELTA-V RESULTS            MPH        (KPH)
   RESULTANT:             18.55       29.84
   LONGITUDINAL:         -16.06      -25.84
   LATERAL:               -9.27       14.92

ANOTHER RUN? (Y/N)
?
```

★U.S. GOVERNMENT PRINTING OFFICE: 1986 623-301/00506